Express Terms

The Office of Statewide Health Planning and Development (OSHPD) proposes to adopt the 2006 edition of the International Building Code of International Code Council for codification and effectiveness in the 2007 edition of the California Building Code as presented on the following pages, including any necessary amendments. The above identified state agency further proposes to:

- Repeal the 1997 edition of the Uniform Building Code of the International Conference of Building Officials;
- Repeal amendments to model codes that are no longer necessary, repeal or amend existing building standards that are not addressed by a model code;
- Adopt new building standards that are not addressed by the model code proposed for adoption.
- Adopt new necessary amendments to the model code proposed for adoption;
- Relocate existing adopted and necessary amendments to the current model code into the format of the model code proposed for adoption. **These amendments with editorial changes only are outside the rule making and are not subject to public comments.**

FORMAT OF EXPRESS TERMS:

- Following each section or chapter, list of the specific statute(s) that mandates the adoption of the regulation, which are called authority statutes, and list of the specific statute(s) that clarify the subject matter being implemented, interpreted, or made specific by the authority statutes, which are called reference statutes are shown.

- Model code text is shown in regular type face.

- In model code sections (Non "A" Chapters) proposed for adoption and modification, new proposed amendments modifying the model code are shown underlined and *italicized*, and model code text proposed to be deleted, but will apply to other applications, uses or occupancies in ~~strike out~~.

- Chapters 16A, 17A, 18A, 19A, 21A, 22A and 34A are applicable to OSHPD 1 & 4 facilities (Hospitals and Correctional Treatment Centers). In these Chapters, where sections are proposed for adoption and modification, new proposed regulations modifying the model code text are shown underlined and *italicized*, and model code text proposed to be deleted are shown in ~~strike out~~ and shaded. If approved by the Commission, the model code text will be removed from these chapters and the deletion will be shown as follows: * * *.

- When amending a provision of Code amendments they are shown *italicized* and additions underlined.

- When adopting building standards that are not addressed by the model code amendments they are shown *italicized* and underlined.

- Repeal of unnecessary existing amendments in CBC 2001 is shown at the beginning of each chapter after the adoption matrix with division, section or subsection numbers in ~~strike out~~. Actual text of the repealed amendments can be found in CBC 2001 and are not reproduced in the express terms.

- Relocation of necessary existing amendments in the CBC 2001, which are not repealed, is shown *italicized* in the express terms. Relocated amendments in the express terms show where they are relocated from in CBC 2001. Modifications to existing amendments are shown *italicized* and underlined. Part of the existing amendments that are not carried forward is shown *italicized and* in ~~strike-out~~. When only a small part of the large existing amendment is carried forward, entire amendment is shown as repealed at the beginning of each chapter after the adoption matrix and part that is carried forward is shown *italicized* and underlined in the express terms.

  First column of the adoption matrix shows the section number of CBC 2001 amendments that are relocated. Second column of the adoption matrix shows the CBC 2007 section numbers corresponding to CBC 2001 section numbers in column one.

- Draft amendment text in 9 pt., Arial font.

Chapter 14 - Exterior Walls

2001 CBC	PROPOSED ADOPTION	OSHPD				DSA-SS	Comments
		1	2	3	4		
	Adopt entire chapter without amendments			X			
	Adopt entire chapter with amendments listed below	X	X		X	X	
	Adopt only those sections listed below						
	1403.2 CA	X	X		X	X	Editorial
	1405.1.1 CA	X	X		X	X	
1403A.4.1 and 1403A.4.4	*1408.1 CA*	X	X		X	X	Relocated existing California Building Standards into IBC format
1403A.5.3	*1408.2 CA*	X	X		X	X	Relocated existing California Building Standards into IBC format
1403A.5.6	*1408.2.1 CA*	X	X		X	X	Relocated existing California Building Standards into IBC format
1405A.1	*1408.3 CA*	X	X		X	X	Relocated existing California Building Standards into IBC format

REPEAL OF EXISTING CALIFORNIA AMENDMENTS IN PART OR IN WHOLE THAT ARE NO LONGER NECESSARY AS FOLLOWS:

~~2001 CBC SECTION 1401A – APPLICABILITY:~~ Repeal all amendments in this section.

2001 CBC SECTION 1403A – VENEER: Repeal amendments in following subsections.

~~1403A.1.1, 1403A.1.2,~~ ~~1403A.3~~ and ~~1403A.6~~ including all subsections.

~~2001 CBC SECTION 1404A – VINYL SIDING:~~ Repeal all amendments in this section.

Notation [For DSA-SS]:
Authority: Education Code Sections 17310, 81142; Health & Safety Code Section 16022
Reference(s): Education Code Sections 17280 - 17317, and 811130 - 81149; Health & Safety Code Sections 16000 – 16023

Notation [For OSHPD]:
Authority: Health and Safety Code Section 129850
Reference: Health and Safety Code Sections 1275, 129850 and 129790

EXPRESS TERMS

SECTION 1401 - GENERAL

1401.1 Scope. The provisions of this chapter shall establish the minimum requirements for exterior walls; exterior wall coverings; exterior wall openings; exterior windows and doors; architectural trim; balconies and similar projections; and bay and oriel windows.

SECTION 1402 - DEFINITIONS

…

SECTION 1403 - PERFORMANCE REQUIREMENTS

1403.1 General. The provisions of this section shall apply to exterior walls, wall coverings and components thereof.

1403.2 Weather protection. Exterior walls shall provide the building with a weather-resistant exterior wall envelope. The exterior wall envelope shall include flashing, as described in Section 1405.3. The exterior wall envelope shall be designed and constructed in such a manner as to prevent the accumulation of water within the wall assembly by providing a water-resistive barrier behind the exterior veneer, as described in Section 1404.2, and a means for draining water that enters the assembly to the exterior. Protection against condensation in the exterior wall assembly shall be provided in accordance with the ~~*International Energy Conservation Code*~~ *Section 150 of Title 24, Part 6*.

Exception [For OSHPD 1, 2 & 4]: OSHPD regulated facilities are exempt from requirements of Title 24, Part 6.

…

Notation [For DSA-SS]:
Authority: Education Code Sections 17310, 81142; Health & Safety Code Section 16022
Reference(s): Education Code Sections 17280 - 17317, and 811130 - 81149; Health & Safety Code Sections 16000 – 16023

Notation [For OSHPD]:
Authority: Health and Safety Code Section 129850
Reference: Health and Safety Code Sections 1275, 129850 and 129790

SECTION 1404 - MATERIALS

…

SECTION 1405 - INSTALLATION OF WALL COVERINGS

1405.1 General. Exterior wall coverings shall be designed and constructed in accordance with the applicable provisions of this section.

> ***1405.1.1 [For DSA-SS and OSHPD 1, 2 and 4] Additional requirements.*** *In addition to the requirements of 1405.5, 1405.6, 1405.7, 1405.8, and 1405.9, the installation of anchored or adhered veneer shall comply with applicable provisions of Section 1408.*

Notation [For DSA-SS]:
Authority: Education Code Sections 17310, 81142; Health & Safety Code Section 16022
Reference(s): Education Code Sections 17280 - 17317, and 811130 - 81149; Health & Safety Code Sections 16000 – 16023

Notation [For OSHPD]:
Authority: Health and Safety Code Section 129850
Reference: Health and Safety Code Sections 1275, 129850 and 129790

1405.2 Weather protection.

…

1405.3 Flashing.

…

1405.4 Wood veneers.

…

1405.5 Anchored masonry veneer. Anchored masonry veneer shall comply with the provisions of Sections 1405.5, 1405.6, 1405.7 and 1405.8 and Sections 6.1 and 6.2 of ACI 530/ASCE 5/TMS 402.

1405.5.1 Tolerances. Anchored masonry veneers in accordance with Chapter 14 are not required to meet the tolerances in Article 3.3 G1 of ACI 530.1/ASCE 6/TMS 602.

1405.5.2 Seismic requirements. Anchored masonry veneer located in Seismic Design Category C, E or F shall conform to the requirements of Section 6.2.2.10 of ACI530/ ASCE5/ TMS 402. Anchored masonry veneer located in Seismic Design Category D shall conform to the requirements for Seismic Design Category E or F.

1405.6 Stone veneer. Stone veneer units not exceeding 10 inches (254 mm) in thickness shall be anchored directly to masonry, concrete or to stud construction by one of the following methods:

1. With concrete or masonry backing, anchor ties shall be not less than 0.1055-inch (2.68 mm) corrosion-resistant wire, or approved equal, formed beyond the base of the backing. The legs of the loops shall be not less than 6 inches (152 mm) in length bent at right angles and laid in the mortar joint, and spaced so that the eyes or loops are 12 inches (305 mm) maximum on center (o.c.) in both directions. There shall be provided not less than a 0.1055-inch (2.68 mm) corrosion-resistant wire tie, or approved equal, threaded through the exposed loops for every 2 square feet (0.2 m^2) of stone veneer. This tie shall be a loop having legs not less than 15 inches (381 mm) in length bent so that it will lie in the stone veneer mortar joint. The last 2 inches (51 mm) of each wire leg shall have a right-angle bend. One-inch (25 mm) minimum thickness of cement grout shall be placed between the backing and the stone veneer.
2. With stud backing, a 2-inch by 2-inch (51 by 51 mm) 0.0625-inch (1.59 mm) corrosion-resistant wire mesh with two layers of water-resistive barrier in accordance with Section 1403.3 shall be applied directly to wood studs spaced a maximum of 16 inches (406 mm) o.c. On studs, the mesh shall be attached with 2-inch-long (51 mm) corrosion-resistant steel wire furring nails at 4 inches (102 mm) o.c. providing a minimum 1.125-inch (29 mm) penetration into each stud and with 8d common nails at 8 inches (203 mm) o.c. into top and bottom plates or with equivalent wire ties. There shall be not less than a 0.1055-inch (2.68 mm) corrosion-resistant wire, or approved equal, looped through the mesh for every 2 square feet (0.2 m^2) of stone veneer. This tie shall be a loop having legs not less than 15 inches (381 mm) in length, so bent that it will lie in the stone veneer mortar joint. The last 2 inches (51 mm) of each wire leg shall have a right-angle bend. One-inch (25 mm) minimum thickness of cement grout shall be placed between the backing and the stone veneer.

1405.7 Slab-type veneer. Slab-type veneer units not exceeding 2 inches (51 mm) in thickness shall be anchored directly to masonry, concrete or stud construction. For veneer units of marble, travertine, granite or other stone units of slab form ties of corrosion-resistant dowels in drilled holes shall be located in the middle third of the edge of the units, spaced a maximum of 24 inches (610 m) apart around the periphery of each unit with not less than four ties per veneer unit. Units shall not exceed 20 square feet (1.9 m^2) in area. If the dowels are not tight fitting, the holes shall be drilled not more than 0.063 inch (1.6 mm) larger in diameter than the dowel, with the hole countersunk to a diameter and depth equal to twice the diameter of the dowel in order to provide a tight-fitting key of cement mortar at the dowel locations when the mortar in the joint has set. Veneer ties shall be corrosion-resistant metal capable of resisting, in tension or compression, a force equal to two times the weight of the attached veneer. If made of sheet metal, veneer ties shall be not smaller in area than 0.0336 by 1 inch (0.853 by 25 mm) or, if made of wire, not smaller in diameter than 0.1483-inch (3.76 mm) wire.

1405.8 Terra cotta. Anchored terra cotta or ceramic units not less than 1.625 inches (41 mm) thick shall be anchored directly to masonry, concrete or stud construction. Tied terra cotta or ceramic veneer units shall be not less than 1.625 inches (41 mm) thick with projecting dovetail webs on the back surface spaced approximately 8 inches (203 mm) o.c. The facing shall be tied to the backing wall with corrosion-resistant metal anchors of not less than No. 8 gage wire installed at the top of each piece in horizontal bed joints not less than 12 inches (305 mm) nor more than 18 inches (457 mm) o.c.; these anchors shall be secured to 0.25-inch (6.4 mm) corrosion-resistant pencil rods that pass through the vertical aligned loop anchors in the backing wall. The veneer ties shall have sufficient strength to support the full weight of the veneer in tension. The facing shall be set with not less than a 2-inch (51 mm) space from the backing wall and the space shall be filled solidly with portland cement grout and pea gravel. Immediately prior to setting, the backing wall and the facing shall be drenched with clean water and shall be distinctly damp when the grout is poured.

1405.9 Adhered masonry veneer. Adhered masonry veneer shall comply with the applicable requirements in Section 1405.9.1 and Sections 6.1 and 6.3 of ACI 530/ASCE 5/TMS 402.

1405.9.1 Interior adhered masonry veneers. Interior adhered masonry veneers shall have a maximum weight of 20 psf (0.958 kg/m^2) and shall be installed in accordance with Section 1405.9. Where the interior adhered masonry veneer is supported by wood construction, the supporting members shall be designed to limit deflection to $^1/_{600}$ of the span of the supporting members.

1405.10 Metal veneers.

…

1405.10.4 Grounding. Grounding of metal veneers on buildings shall comply with the requirements of Chapter 27 of this code or the ~~*ICC*~~ *California Electrical Code*.

1405.11 Glass veneer.

…

1405.12 Exterior windows and doors.

…

1405.13 Vinyl siding.

…

1405.14 Cement plaster.

…

1405.15 Fiber cement siding.

…

1405.16 Fastening.

…

1405.17 Fiber cement siding.

…

Notation [For DSA-SS]:
Authority: Education Code Sections 17310, 81142; Health & Safety Code Section 16022
Reference(s): Education Code Sections 17280 - 17317, and 811130 - 81149; Health & Safety Code Sections 16000 – 16023

Notation [For OSHPD]:
Authority: Health and Safety Code Section 129850
Reference: Health and Safety Code Sections 1275, 129850 and 129790

SECTION 1406 - COMBUSTIBLE MATERIALS ON THE EXTERIOR SIDE OF EXTERIOR WALLS

…

SECTION 1407 - METAL COMPOSITE MATERIALS (MCM)

…

SECTION 1408 [FOR DSA-SS AND OSHPD 1, 2 AND 4] - ADDITIONAL REQUIREMENTS FOR ANCHORED AND ADHERED VENEER.

1408.1 *(Relocated from 1403A.4.1, 2001 CBC)* ***General.*** *In no case shall veneer be considered as part of the backing in computing strength or deflection nor shall it be considered a part of the required thickness of the ~~wall~~ backing.*

Veneer shall be anchored in a manner which will not allow relative movement between the veneer and the wall.

(Relocated from 1403A.4.4, 2001 CBC) Anchored or adhered veneer shall not be used on overhead horizontal surfaces.

1408.2 *(Relocated from 1403A.5.3, 2001 CBC)* ***Adhered Veneer.*** *Units of tile, masonry, stone or terra cotta which exceed 5/8 inch (16 mm) in thickness shall be applied as for anchored veneer where used over exit ways or more than 20 feet (6096 mm) in height above adjacent ground elevation.*

1408.2.1 *(Relocated from 1403A.5.6, 2001 CBC)* ***Bond Strength and Tests.*** *Veneer shall develop a bond to the ~~supporting element~~ backing ~~of sufficient strength to provide a working shear stress of 50 psi (690 kPa).~~ in accordance with ACI 530, Section 6.3.2.4.*

Not less than two shear tests shall be performed for the adhered veneer between the units and the supporting element. At least one shear test shall be performed at each building for each 5,000 square feet (465 m^2) of floor area or fraction thereof.

~~*The bond strength as determined by the tests shall have a minimum shear strength of 100 psi (690 kPa).*~~

1408.3 *(Relocated from 1405A.1, 2001 CBC)* ***Inspection.*** *All veneer shall be ~~continuously inspected during application by an inspector specially approved for that purpose by the enforcement agency.~~ inspected per Section 1704A.5.1.*

Notation [For DSA-SS]:
Authority: Education Code Sections 17310, 81142; Health & Safety Code Section 16022
Reference(s): Education Code Sections 17280 - 17317, and 811130 - 81149; Health & Safety Code Sections 16000 – 16023

Notation [For OSHPD]:
Authority: Health and Safety Code Section 129850
Reference: Health and Safety Code Sections 1275, 129850 and 129790

Chapter 15 - Roof Assemblies and Rooftop Structures

2001 CBC	PROPOSED ADOPTION	OSHPD				DSA-SS	Comments
		1	2	3	4		
	Adopt entire chapter without amendments			X			
	Adopt entire chapter with amendments listed below	X	X		X	X	
	Adopt only those sections listed below						
	1507.3.10 CA	X	X		X	X	
	1507.7.6 CA	X	X		X	X	
	1511 CA	X	X		X	X	
1507.1.1.1	*1511.1 CA*	X	X		X	X	Relocated existing California Building Standards into IBC format
1507.1.1.2	*1511.2 CA*	X	X		X	X	Relocated existing California Building Standards into IBC format
1507.1.1.3	*1511.3 CA*	X	X		X	X	Relocated existing California Building Standards into IBC format
1507.7.1	*1511.4 CA*	X	X		X	X	Relocated existing California Building Standards into IBC format
1507.11.1	*1511.5 CA*	X	X		X	X	Relocated existing California Building Standards into IBC format
	15116.6 CA	X	X		X	X	

REPEAL OF EXISTING CALIFORNIA AMENDMENTS IN PART OR IN WHOLE THAT ARE NO LONGER NECESSARY AS FOLLOWS:

~~2001 CBC SECTION 1501 – SCOPE:~~ Repeal all amendments in this section.

~~2001 CBC SECTION 1505 – ATTICS: ACCESS, DRAFT STOPS AND VENTILATION:~~ Repeal all amendments in this section.

2001 CBC SECTION 1507 – ROOF COVERING MATERIALS AND APPLICATION: Repeal amendment in the following subsection.

~~1507.1.1~~ and ~~1507.8~~

2001 CBC CHAPTER 15 TABLES: Repeal all amendments in following tables.

~~Tables 15-B-1, 15-B-2, 15-C, 15-D-1.1, 15-D-2.1~~ and ~~15-E.~~

Notation [For DSA-SS]:
Authority: Education Code Sections 17310, 81142; Health & Safety Code Section 16022
Reference(s): Education Code Sections 17280 - 17317, and 811130 - 81149; Health & Safety Code Sections 16000 – 16023

Notation [For OSHPD]:
Authority: Health and Safety Code Section 129850

Reference: Health and Safety Code Sections 1275, 129850 and 129790

EXPRESS TERMS

SECTION 1501 - GENERAL

1501.1 Scope. The provisions of this chapter shall govern the design, materials, construction and quality of roof assemblies, and rooftop structures.

SECTION 1502 - DEFINITIONS

…

SECTION 1503 - WEATHER PROTECTION

…

~~**[P]**~~ **1503.4 Roof drainage.** Design and installation of roof drainage systems shall comply with the ~~*International*~~ *California Plumbing Code*.

…

Notation [For DSA-SS]:
Authority: Education Code Sections 17310, 81142; Health & Safety Code Section 16022
Reference(s): Education Code Sections 17280 - 17317, and 811130 - 81149; Health & Safety Code Sections 16000 – 16023

Notation [For OSHPD]:
Authority: Health and Safety Code Section 129850
Reference: Health and Safety Code Sections 1275, 129850 and 129790

SECTION 1504 - PERFORMANCE REQUIREMENTS

…

SECTION 1505 - FIRE CLASSIFICATION

…

SECTION 1506 - MATERIALS

…

SECTION 1507 - REQUIREMENTS FOR ROOF COVERINGS

1507.1 Scope. Roof coverings shall be applied in accordance with the applicable provisions of this section and the manufacturer's installation instructions.

1507.2 Asphalt shingles.

…

1507.3 Clay and concrete tile. The installation of clay and concrete tile shall comply with the provisions of this section.

1507.3.1 Deck requirements. Concrete and clay tile shall be installed only over solid sheathing or spaced structural sheathing boards.

1507.3.2 Deck slope. Clay and concrete roof tile shall be installed on roof slopes of $2^1/_2$ units vertical in 12 units horizontal (21-percent slope) or greater. For roof slopes from $2^1/_2$ units vertical in 12 units horizontal (21-percent slope) to four units vertical in 12 units horizontal (33-percent slope), double underlayment application is required in accordance with Section 1507.3.3.

1507.3.3 Underlayment.

…

1507.3.4 Clay tile. Clay roof tile shall comply with ASTM C 1167.

1507.3.5 Concrete tile. Concrete roof tile shall comply with ASTM C 1492.

1507.3.6 Fasteners. Tile fasteners shall be corrosion resistant and not less than 11 gage, $^5/_{16}$-inch (8.0 mm) head, and of sufficient length to penetrate the deck a minimum of 0.75 inch (19.1 mm) or through the thickness of the deck, whichever is less. Attaching wire for clay or concrete tile shall not be smaller than 0.083 inch (2.1 mm). Perimeter fastening areas include three tile courses but not less than 36 inches (914 mm) from either side of hips or ridges and edges of eaves and gable rakes.

1507.3.7 Attachment. Clay and concrete roof tiles shall be fastened in accordance with Table 1507.3.7.

TABLE 1507.3.7 - CLAY AND CONCRETE TILE ATTACHMENT [a, b, c]

GENERAL — CLAY OR CONCRETE ROOF TILE			
Maximum basic wind speed (mph)	**Mean roof height (feet)**	**Roof slope up to < 3:12**	**Roof slope 3:12 and over**
85	0-60	One fastener per tile. Flat tile without vertical laps, two fasteners per tile.	Two fasteners per tile. Only one fastener on slopes of 7:12 and less for tiles with installed weight exceeding 7.5 lbs./sq. ft. having a width no greater than 16 inches.
100	0-40		
100	> 40-60	The head of all tiles shall be nailed. The nose of all eave tiles shall be fastened with approved clips. All rake tiles shall be nailed with two nails. The nose of all ridge, hip and rake tiles shall be set in a bead of roofer's mastic.	
110	0-60	The fastening system shall resist the wind forces in Section 1609.5.2.	
120	0-60	The fastening system shall resist the wind forces in Section 1609.5.2.	
130	0-60	The fastening system shall resist the wind forces in Section 1609.5.2.	
All	> 60	The fastening system shall resist the wind forces in Section 1609.5.2.	

INTERLOCKING CLAY OR CONCRETE ROOF TILE WITH PROJECTING ANCHOR LUGS[d, e] (Installations on spaced/solid sheathing with battens or spaced sheathing)				
Maximum basic wind speed (mph)	**Mean roof height (feet)**	**Roof slope up to < 5:12**	**Roof slope 5:12 < 12:12**	**Roof slope 12:12 and over**
85	0-60	Fasteners are not required. Tiles with installed weight less than 9 lbs./sq. ft. require a minimum of one fastener per tile.	One fastener per tile every other row. All perimeter tiles require one fastener. Tiles with installed weight less than 9 lbs./sq. ft. require a minimum of one fastener per tile.	One fastener required for every tile. Tiles with installed weight less than 9 lbs./sq. ft. require a minimum of one fastener per tile.
100	0-40			
100	> 40-60	The head of all tiles shall be nailed. The nose of all eave tiles shall be fastened with approved clips. All rake tiles shall be nailed with two nails The nose of all ridge, hip and rake tiles shall be set in a bead of roofers's mastic.		
110	0-60	The fastening system shall resist the wind forces in Section 1609.5.2.		
120	0-60	The fastening system shall resist the wind forces in Section 1609.5.2.		
130	0-60	The fastening system shall resist the wind forces in Section 1609.5.2.		
All	> 60	The fastening system shall resist the wind forces in Section 1609.5.2.		

INTERLOCKING CLAY OR CONCRETE ROOF TILE WITH PROJECTING ANCHOR LUGS (Installations on solid sheathing without battens)		
Maximum	**Mean roof**	**All roof slopes**

basic wind speed (mph)	height (feet)	
85	0-60	One fastener per tile.
100	0-40	One fastener per tile.
100	> 40-60	The head of all tiles shall be nailed. The nose of all eave tiles shall be fastened with approved clips. All rake tiles shall be nailed with two nails The nose of all ridge, hip and rake tiles shall be set in a bead of roofer's mastic.
110	0-60	The fastening system shall resist the wind forces in Section 1609.5.2.
120	0-60	The fastening system shall resist the wind forces in Section 1609.5.2.
130	0-60	The fastening system shall resist the wind forces in Section 1609.5.2.
All	> 60	The fastening system shall resist the wind forces in Section 1609.5.2.

For SI: 1 inch = 25.4 mm, 1 foot = 304.8 mm, 1 mile per hour = 0.447 m/s, 1 pound per square foot = 4.882 kg/m^2.

a. Minimum fastener size. Corrosion-resistant nails not less than No. 11 gage with $^5/_{16}$-inch head. Fasteners shall be long enough to penetrate into the sheathing 0.75 inch or through the thickness of the sheathing, whichever is less. Attaching wire for clay and concrete tile shall not be smaller than 0.083 inch.

b. Snow areas. A minimum of two fasteners per tile are required or battens and one fastener.

c. Roof slopes greater than 24:12. The nose of all tiles shall be securely fastened.

d. Horizontal battens. Battens shall be not less than 1inch by 2 inch nominal. Provisions shall be made for drainage by a minimum of $^1/_8$-inch riser at each nail or by 4-foot-long battens with at least a 0.5-inch separation between battens. Horizontal battens are required for slopes over 7:12.

e. Perimeter fastening areas include three tile courses but not less than 36 inches from either side of hips or ridges and edges of eaves and gable rakes.

1507.3.8 Application.

…

1507.3.9 Flashing.

…

1507.3.10 [For DSA-SS and OSHPD 1, 2 and 4] Additional requirements. *In addition to the requirements of 1507.3.6 and 1507.3.7, the installation of clay and concrete tile roof coverings shall comply with seismic anchorage provisions of Section 1511.*

Notation [For DSA-SS]:
Authority: Education Code Sections 17310, 81142; Health & Safety Code Section 16022
Reference(s): Education Code Sections 17280 - 17317, and 811130 - 81149; Health & Safety Code Sections 16000 – 16023

Notation [For OSHPD]:
Authority: Health and Safety Code Section 129850
Reference: Health and Safety Code Sections 1275, 129850 and 129790

1507.4 Metal roof panels.

…

1507.5 Metal roof shingles.

…

1507.6 Mineral-surfaced roll roofing.

…

1507.7 Slate shingles. The installation of slate shingles shall comply with the provisions of this section.

1507.7.1 Deck requirements. Slate shingles shall be fastened to solidly sheathed roofs.

1507.7.2 Deck slope. Slate shingles shall only be used on slopes of four units vertical in 12 units horizontal (4:12) or greater.

1507.7.3 Underlayment.

…

1507.7.4 Material standards. Slate shingles shall comply with ASTM C 406.

1507.7.5 Application. Minimum headlap for slate shingles shall be in accordance with Table 1507.7.5. Slate shingles shall be secured to the roof with two fasteners per slate.

…

1507.7.6 [For DSA-SS and OSHPD 1, 2 and 4] Additional requirements. *In addition to the requirements of 1507.3.6 and 1507.3.7, the installation of slate shingle roof coverings shall comply with seismic anchorage provisions of Section 1511.*

1507.8 Wood shingles.

…

1507.9 Wood shakes.

…

1507.10 Built-up roofs.

…

1507.11 Modified bitumen roofing.

…

1507.12 Thermoset single-ply roofing.

…

1507.13 Thermoplastic single-ply roofing.

…

1507.14 Sprayed polyurethane foam roofing.

…

1507.15 Liquid-applied coatings.

…

SECTION 1508 - ROOF INSULATION

…

SECTION 1509 - ROOFTOP STRUCTURES

…

SECTION 1510 - REROOFING

…

[FOR DSA-SS AND OSHPD 1, 2 AND 4] SECTION 1511 - SEISMIC ANCHORAGE OF SLATE SHINGLE, CLAY AND CONCRETE TILE ROOF COVERINGS.

1511.1 *(Relocated from 1507.1.1.1, 2001 CBC)* ***Fasteners****. Nails shall be ~~as set forth herein or in Tables 15-B-1 and 15-B-2 and shall be~~ long enough to penetrate into the sheathing 3/4 inch (19 mm). Where sheathing is less than 3/4 inch (19 mm) in thickness, nails shall be driven into supports, unless nails with ring shanks are used.*

~~Built-up roofing nails fo rwood board deck shall be No. 12 gage,7/16-inch (11 mm) head, driven through tin caps or approved nails with integral caps. For plywood, use No. 11 gage ring shank nails driven through tin caps or approved nails with integral caps. For gypsum decks, insulating concrete, cementitious wood fiber and others, fasteners recommended by the deck manufacturer and acceptable to the enforcement agency shall be used.~~

All fasteners shall be corrosion resistant and fabricated of copper, stainless steel, or brass, or shall have a hot dipped galvanized coating not less than 1.0 ounce of zinc per square foot (458 gm/m2).

~~Tin caps or integral caps shall not be smaller than 1 inch (25mm)~~.

Nails for slate shingles and clay or concrete tile shall be copper, brass or stainless steel with gage and length per common ferrous nails.

1511.2 *(Relocated from 1507.1.1.2, 2001 CBC)* ***Wire.*** *Wire for attaching slate shingles and clay or concrete tile shall be copper, brass or stainless steel capable of supporting four times the weight of tile.*

Wire supporting a single tile or shingle shall not be smaller than 1/16 inch (1.6 mm) in diameter. Continuous wire ties supporting more than one tile shall not be smaller than 0.084 inch (2 mm) in diameter.

1511.3 *(Relocated from 1507.1.1.3, 2001 CBC)* ***Metal strips.*** *Metal strips for attaching slate shingles and clay or concrete tile shall be copper, brass or stainless steel capable of supporting four times the weight of tile.*

1511.4 *(Relocated from 1507.7.1, 2001 CBC)* ***Clay or Concrete Tiles.*** *Clay or concrete tile shall be installed in accordance with ~~UBC Standard 15-5~~ Table 1507.3.7 and as described herein.*

~~Clay or concrete tile shall be installed in accordance with Tables 15-D-1 and 15-D-2, and as described herein.~~

1. *On wood roofs or roofs of other material to which wood strips are secured, every cover or top tile when fastened with nails shall be nailed directly into 1-1/4 inches (32 mm) sound grain soft wood strips of sufficient height to support the tile.*

   Pan or bottom tiles shall be nailed directly to the roof sheathing or to wood strips. Wood strips shall be secured to the roof by nails spaced not over 12 inches (305 mm) apart.

2. *On concrete roofs, wires shall be secured in place by wire loops embedded into the concrete not less than 2 inches (51 mm). The wire loops shall be spaced not more than 36 inches (914 mm) on center parallel to the eaves, and spaced vertically to allow for the minimum 3 inches (76 mm) lapping of the tile.*

3. *Where continuous ties of twisted wire, interlocking wires or metal strips extending from the ridge to eave are used to attach tile, the ties shall be attached to the roof construction at the ridge, eave, and at intervals not exceeding 10 feet 0 inch (3048 mm) on center. The ties within 2 feet 0 inch (610 mm) of the rake shall be attached at intervals of 5 feet 0 inch (1524 mm).*

Attachment for continuous ties shall be nails, screws, staples or approved clips of the same material as the ties and shall not be subjected to withdrawal forces. Attachments for continuous ties shall have an allowable working stress shear resistance of not less than twice the dead weight of the tile tributary to the attachment, but not less than 300 pounds (136 kg).

4. Tile with projecting anchor lugs at the bottom of the tiles shall be held in position by means of 1-inch by 2-inch (25mmby 51mm) wood stripping nailed to the roof sheathing over the underlay.

~~Tile roofs shall have an underlayment of not less than two layers of Type 15 felt or one layer of Type 30 felt.~~

5. Clay or concrete tile on roofs with slopes exceeding 24 units vertical in 12 units horizontal (200% slope) shall be attached as required for veneer in Chapter 14 ~~A~~. The nose of all tiles shall be securely fastened.

6. (Relocated from Table 15-D-1.1, 2001 CBC) Clay or concrete tile shall have a minimum of two fasteners per tile. Tiles that are 8 inches (203 mm) in width or less are permitted to be fastened at the center of the head with one fastener per tile.

7. (Relocated from Table 15-D-2.1, 2001 CBC) Interlocking clay or concrete tile shall have a minimum of one nail near center of head or two wire ties per tile.

1511.5 *(Relocated from 1507.11.1, 2001 CBC)* ***Slate Shingles.*** *Slate shingles on roofs with slopes exceeding 24 units vertical in 12 units horizontal (200% slope) shall be attached as required for veneer per Chapter 14 ~~A~~.*

1511.6 Alternative Design. *An alternative design of the fastening system used to resist seismic loads is permitted, provided that an engineering analysis or test report based on cyclic testing is provided to the enforcement agency.*

The fastening system shall be designed to resist seismic forces per ASCE 7, Section 13.3. Testing of alternative fastening system shall comply with ASCE 7, Section 13.2.5.

Notation [For DSA-SS]:
Authority: Education Code Sections 17310, 81142; Health & Safety Code Section 16022
Reference(s): Education Code Sections 17280 - 17317, and 811130 - 81149; Health & Safety Code Sections 16000 – 16023

Notation [For OSHPD]:
Authority: Health and Safety Code Section 129850
Reference: Health and Safety Code Sections 1275, 129850 and 129790

CHAPTER 16 - STRUCTURAL DESIGN

2001 CBC	PROPOSED ADOPTION	OSHPD		Comments
		2	3	
	Adopt entire chapter without amendments		X	
	Adopt entire chapter with amendments listed below	X		
	Adopt only those sections listed below			
	1601.2 CA	X		
	1601.3 CA	X		
1641A CA	*1602.1*	X		Relocated existing California Building Standards into IBC format
	1603.1	X		
1632.1	*1605.3.2*	X		Relocated existing California Building Standards into IBC format
Table 16-B	*1607.1, Table 1607.1*	X		Relocated existing California Building Standards into IBC format
	1609.1.1 CA	X		
1619	*1609.4*	X		Relocated existing California Building Standards into IBC format.
	1612.3	X		
	1612.5	X		
	1613.1	X		
	1613.5.1	X		
	1613.5.6	X		
	1613.5.6.1	X		Not permitted
	1613.5.6.2	X		

REPEAL OF EXISTING CALIFORNIA AMENDMENTS IN PART OR IN WHOLE THAT ARE NO LONGER NECESSARY AS FOLLOWS:

2001 CBC DIVISION I – GENERAL DESIGN REQUIREMENTS

2001 CBC SECTION 1611 – OTHER MINIMUM LOADS: Repeal amendment in the following subsection.
~~*1611.5*~~.

2001 CBC SECTION 1612 – COMBINATIONS OF LOADS: Repeal amendment in the following subsection.

~~*1612.2.1*~~.

2001 CBC DIVISION IV – EARTHQUAKE DESIGN

~~2001 CBC SECTION 1632 – LATERAL FORCE ON ELEMENTS OF STRUCTURES, NONSTRUCTURAL COMPONENTS AND EQUIPMENT SUPPORTED BY STRUCTURES:~~ Repeal all amendments in this section.

2001 CBC DIVISION V – SOIL PROFILE TYPES AND SITE DATA FOR HEALTH FACILITIES

~~*2001 CBC SECTION 1636 – SITE CATEGORIZATION PROCEDURE AND SITE DATA FOR HEALTH FACILITIES*~~: Repeal all amendments in this section.

~~*Table 160B:*~~ Item # 6.1.

Notation [For OSHPD]:
Authority: Health and Safety Code Section 129850
Reference: Health and Safety Code Sections 1275 and 129850

EXPRESS TERMS

SECTION 1601 GENERAL

1601.1 Scope. The provisions of this chapter shall govern the structural design of buildings, structures and portions thereof regulated by this code.

1601.2 [For OSHPD 2] References. *All referenced codes and standards listed in Chapter 35 shall include all the modifications contained in this code to referenced standards. In the event of any discrepancy between this code and a referenced standard, refer to Section 101.7*

1601.3 [For OSHPD 2] Enforcement Agency Approval.. *In addition to requirements of CCR Title 24, Parts 1 & 2, any aspect of project design, construction, quality assurance, or quality control programs for which this code requires approval by the design professional, are also subject to approval by the enforcement agency.*

Notation [For OSHPD]:
Authority: Health and Safety Code Section 129850
Reference: Health and Safety Code Sections 1275 and 129850

SECTION 1602 DEFINITIONS AND NOTATIONS

1602.1 Definitions. The following words and terms shall, for the purposes of this chapter, have the meanings shown herein.
ALLOWABLE STRESS DESIGN. A method of proportioning structural members, such that elastically computed stresses produced in the members by nominal loads do not exceed specified allowable stresses (also called "working stress design").

BALCONY, EXTERIOR. An exterior floor projecting from and supported by a structure without additional independent supports.

DEAD LOADS. The weight of materials of construction incorporated into the building, including but not limited to walls, floors, roofs, ceilings, stairways, built-in partitions, finishes, cladding and other similarly incorporated architectural and structural items, and the weight of fixed service equipment, such as cranes, plumbing stacks and risers, electrical feeders, heating, ventilating and air-conditioning systems and fire sprinkler systems.

DECK. An exterior floor supported on at least two opposing sides by an adjacent structure, and/or posts, piers or other independent supports.

DESIGN STRENGTH. The product of the nominal strength and a resistance factor (or strength reduction factor).

DIAPHRAGM. A horizontal or sloped system acting to transmit lateral forces to the vertical-resisting elements. When the term

"diaphragm" is used, it shall include horizontal bracing systems.
Diaphragm, blocked. In light-frame construction, a diaphragm in which all sheathing edges not occurring on a framing member are supported on and fastened to blocking.
Diaphragm boundary. In light-frame construction, a location where shear is transferred into or out of the diaphragm sheathing. Transfer is either to a boundary element or to another force-resisting element.
Diaphragm chord. A diaphragm boundary element perpendicular to the applied load that is assumed to take axial stresses due to the diaphragm moment.
Diaphragm flexible. A diaphragm is flexible for the purpose of distribution of story shear and torsional moment where so indicated in Section 12.3.1 of ASCE 7, as modified in Section 1613.6.1.
Diaphragm, rigid. A diaphragm is rigid for the purpose of distribution of story shear and torsional moment when the lateral deformation of the diaphragm is less than or equal to two times the average story drift.

DURATION OF LOAD. The period of continuous application of a given load, or the aggregate of periods of intermittent applications of the same load.

(Relocated from 1641A.1, 2001 CBC) *[For OSHPD 2]* ***ENFORCEMENT AGENT.*** *That individual within the agency or organization charged with responsibility for agency or organization compliance with the requirements of ~~Division VI-R~~ this Code. Used interchangeably with Building Official or Code Official.*

ESSENTIAL FACILITIES. Buildings and other structures that are intended to remain operational in the event of extreme environmental loading from flood, wind, snow or earthquakes.

FABRIC PARTITIONS. A partition consisting of a finished surface made of fabric, without a continuous rigid backing, that is directly attached to a framing system in which the vertical framing members are spaced greater than 4 feet (1219 mm) on center.

FACTORED LOAD. The product of a nominal load and a load factor.

GUARD. See Section 1002.1.

IMPACT LOAD. The load resulting from moving machinery, elevators, craneways, vehicles and other similar forces and kinetic loads, pressure and possible surcharge from fixed or moving loads.

LIMIT STATE. A condition beyond which a structure or member becomes unfit for service and is judged to be no longer useful for its intended function (serviceability limit state) or to be unsafe (strength limit state).

LIVE LOADS. Those loads produced by the use and occupancy of the building or other structure and do not include construction or environmental loads such as wind load, snow load, rain load, earthquake load, flood load or dead load.

LIVE LOADS (ROOF). Those loads produced (1) during maintenance by workers, equipment and materials; and (2) during the life of the structure by movable objects such as planters and by people.

LOAD AND RESISTANCE FACTOR DESIGN (LRFD). A method of proportioning structural members and their connections using load and resistance factors such that no applicable limit state is reached when the structure is subjected to appropriate load combinations. The term "LRFD" is used in the design of steel and wood structures.

LOAD EFFECTS. Forces and deformations produced in structural members by the applied loads.

LOAD FACTOR. A factor that accounts for deviations of the actual load from the nominal load, for uncertainties in the analysis that transforms the load into a load effect, and for the probability that more than one extreme load will occur simultaneously.

LOADS. Forces or other actions that result from the weight of building materials, occupants and their possessions, environmental effects, differential movement and restrained dimensional changes. Permanent loads are those loads in which variations over time are rare or of small magnitude, such as dead loads. All other loads are variable loads (see also "Nominal loads").

NOMINAL LOADS. The magnitudes of the loads specified in this chapter (dead, live, soil, wind, snow, rain, flood and earthquake).

OCCUPANCY CATEGORY. A category used to determine structural requirements based on occupancy.

OTHER STRUCTURES. Structures, other than buildings, for which loads are specified in this chapter.

PANEL (PART OF A STRUCTURE). The section of a floor, wall or roof comprised between the supporting frame of two adjacent rows of columns and girders or column bands of floor or roof construction.

RESISTANCE FACTOR. A factor that accounts for deviations of the actual strength from the nominal strength and the manner and consequences of failure (also called "strength reduction factor").

STRENGTH, NOMINAL. The capacity of a structure or member to resist the effects of loads, as determined by computations using specified material strengths and dimensions and equations derived from accepted principles of structural mechanics or by field tests or laboratory tests of scaled models, allowing for modeling effects and differences between laboratory and field conditions.

STRENGTH, REQUIRED. Strength of a member, cross section or connection required to resist factored loads or related internal moments and forces in such combinations as stipulated by these provisions.

STRENGTH DESIGN. A method of proportioning structural members such that the computed forces produced in the members by factored loads do not exceed the member design strength [also called "load and resistance factor design" (LRFD)]. The term "strength design" is used in the design of concrete and masonry structural elements.

VEHICLE BARRIER SYSTEM. A system of building components near open sides of a garage floor or ramp or building walls that act as restraints for vehicles.

NOTATIONS.

D = Dead load.

E = Combined effect of horizontal and vertical earthquake induced forces as defined in Section 12.4.2 of ASCE 7.

E_m = Maximum seismic load effect of horizontal and vertical seismic forces as set forth in Section 12.4.3 of ASCE 7.

F = Load due to fluids with well-defined pressures and maximum heights.

F_a = Flood load.

H = Load due to lateral earth pressures, ground water pressure or pressure of bulk materials.

L = Live load, except roof live load, including any permitted live load reduction.

L_r = Roof live load including any permitted live load reduction.

R = Rain load.

S = Snow load.

T = Self-straining force arising from contraction or expansion resulting from temperature change, shrinkage, moisture change, creep in component materials, movement due to differential settlement or combinations thereof.

W = Load due to wind pressure.

Notation [For OSHPD]:
Authority: Health and Safety Code Section 129850
Reference: Health and Safety Code Sections 1275 and 129850

SECTION 1603 CONSTRUCTION DOCUMENTS

1603.1 General. Construction documents shall show the size, section and relative locations of structural members with floor levels, column centers and offsets dimensioned. The design loads and other information pertinent to the structural design required by Sections 1603.1.1 through 1603.1.~~8~~**9** shall be indicated on the construction documents.

[For OSHPD 2] Additional requirements are included in Section 7-115 and 7-125 of the Building Standards Administration Code (Part 1, Title 24, C.C.R).

Exception: Construction documents for buildings constructed in accordance with the conventional light-frame construction provisions of Section 2308 shall indicate the following structural design information:

1. Floor and roof live loads.
2. Ground snow load, P_g.
3. Basic wind speed (3-second gust), miles per hour (mph) (km/hr) and wind exposure.
4. Seismic design category and site class.
5. Flood design data, if located in flood hazard areas established in Section 1612.3.

Notation [For OSHPD]:
Authority: Health and Safety Code Section 129850
Reference: Health and Safety Code Sections 1275 and 129850

SECTION 1605 LOAD COMBINATIONS

1605.1 General. Buildings and other structures and portions thereof shall be designed to resist the load combinations specified in Section 1605.2 or 1605.3 and Chapters 18 through 23, and the special seismic load combinations of Section 1605.4 where required by Section 12.3.3.3 or 12.10.2.1 of ASCE 7. Applicable loads shall be considered, including both earthquake and wind, in accordance with the specified load combinations. Each load combination shall also be investigated with one or more of the variable loads set to zero.

……
1605.3 Load combinations using allowable stress design.

……

1605.3.2 Alternative basic load combinations. In lieu of the basic load combinations specified in Section 1605.3.1, structures and portions thereof shall be permitted to be designed for the most critical effects resulting from the following combinations. When using these alternative basic load combinations that include wind or seismic loads, allowable stresses are permitted to be increased or load combinations reduced where permitted by the material chapter of this code or the referenced standards. For load combinations that include the counteracting effects of dead and wind loads, only two-thirds of the minimum dead load likely to be in place during a design wind event shall be used. Where wind loads are calculated in accordance with Chapter 6 of ASCE 7, the coefficient ω in the following equations shall be taken as 1.3. For other wind loads, ω shall be taken as 1. When using these alternative load combinations to evaluate sliding, overturning and soil bearing at the soil-structure interface, the reduction of foundation overturning from Section 12.13.4 in ASCE 7 shall not be used. When using these alternative basic load combinations for proportioning foundations for loadings, which include seismic loads, the vertical seismic load effect, E_v, in Equation 12.4-4 of ASCE 7 is permitted to be taken equal to zero.

> *Exception:* ***(Relocated from 1632.1, 2001 CBC)*** *[For OSHPD 2] Intermittent connections such as inserts for anchorage of nonstructural components shall not be allowed the one-third increase in allowable stresses.*

$D + L + (L_r \text{ or } S \text{ or } R)$

(Equation 16-16)

$D + L + (\omega W)$

(Equation 16-17)

$D + L + \omega W + S/2$

(Equation 16-18)

$D + L + S + \omega W/2$

(Equation 16-19)

$D + L + S + E/1.4$

(Equation 16-20)

$0.9D + E/1.4$

(Equation 16-21)

Exceptions:

1. Crane hook loads need not be combined with roof live loads or with more than three-fourths of the snow load or one-half of the wind load.
2. Flat roof snow loads of 30 psf (1.44 kN/m^2) or less need not be combined with seismic loads. Where flat roof snow loads exceed 30 psf (1.44 kN/m^2), 20 percent shall be combined with seismic loads.

Notation [For OSHPD]:
Authority: Health and Safety Code Section 129850
Reference: Health and Safety Code Sections 1275 and 129850

….

SECTION 1607 LIVE LOADS

1607.1 General. Live loads are those loads defined in Section 1602.1.

TABLE 1607.1 MINIMUM UNIFORMLY DISTRIBUTED LIVE LOADS AND MINIMUM CONCENTRATED LIVE LOADS[g]

OCCUPANCY OR USE	UNIFORM (psf)	CONCENTRATED (lbs.)
1.Apartments (see residential)	—	—
2.Access floor systems Office use Computer use	 50 100	 2,000 2,000
3.Armories and drill rooms	150	—
4.Assembly areas and theaters Fixed seats (fastened to floor) Follow spot, projections and control rooms Lobbies Movable seats Stages and platforms	 60 50 100 100 125	—
5.Balconies On one- and two-family residences only, and not exceeding 100 sq ft	100 60	—
6.Catwalks	40	300
7.Decks	Same as occupancy served[h]	—

8.Bowling alleys	75	—
9.Cornices	60	—
10.Corridors, except as otherwise indicated	100	—
11.Dance halls and ballrooms	100	—
OCCUPANCY OR USE	**UNIFORM (psf)**	**CONCENTRATED (lbs.)**
12.Dining rooms and restaurants	100	—
13.Dwellings (see residential)	—	—
14.Elevator machine room grating (on area of 4 in^2)	—	300
15.Finish light floor plate construction (on area of 1 in^2)	— —	200
16.Fire escapes On single-family dwellings only	100 40	—
17.Garages (passenger vehicles only) Trucks and buses	40 Note a See Section 1607.6	
18.Grandstands (see stadium and arena bleachers)	—	—
19.Gymnasiums, main floors and balconies	100	—
20.Handrails, guards and grab bars	See Section 1607.7	
21.Hospitals Corridors above first floor Operating rooms, laboratories Patient rooms	80 60 40	1,000 1,000 1,000
22.Hotels (see residential)	—	—
23.Libraries Corridors above first floor Reading rooms Stack rooms	80 60 150[b]	1,000 1,000 1,000
24.Manufacturing Heavy Light	250 125	3,000 2,000
25.Marquees	75	—
26.Office buildings Corridors above first floor File and computer rooms shall be designed for heavier loads based on anticipated occupancy Lobbies and first-floor corridors Offices	80 — 100 50	2,000 — 2,000 2,000
27.Penal institutions Cell blocks Corridors	40 100	—

28.Residential One- and two-family dwellings Uninhabitable attics without storage[i] Uninhabitable attics with limited storage[i, j, k] Habitable attics and sleeping areas All other areas except balconies and decks Hotels and multiple-family dwellings Private rooms and corridors serving them Public rooms and corridors serving them	10 20 30 40 40 100	—
OCCUPANCY OR USE	**UNIFORM (psf)**	**CONCENTRATED (lbs.)**
29.Reviewing stands, grandstands and bleachers	Note c	
30.Roofs All roof surfaces subject to maintenance workers Awnings and canopies Fabric construction supported by a lightweight rigid skeleton structure All other construction Ordinary flat, pitched, and curved roofs Primary roof members, exposed to a work floor Single panel point of lower chord of roof trusses or any point along primary structural members supporting roofs: Over manufacturing, storage warehouses, and repair garages All other occupancies Roofs used for other special purposes Roofs used for promenade purposes Roofs used for roof gardens or assembly purposes	5 nonreduceable 20 20 Note 1 60 100	300 2,000 300 Note 1
(31.Schools Classrooms Corridors above first floor First-floor corridors	40 80 100	1,000 1,000 1,000
32.Scuttles, skylight ribs and accessible ceilings	—	200
33.Sidewalks, vehicular driveways and yards, subject to trucking	250[d]	8,000[e]
34.Skating rinks	100	—
35.Stadiums and arenas Bleachers Fixed seats (fastened to floor)	100[c] 60[c]	—
36.Stairs and exits One- and two-family dwellings All other	40 100	Note f
37.Storage warehouses (shall be designed for heavier loads if required for anticipated storage) Heavy Light	250 125	
38.Stores Retail First floor Upper floors Wholesale, all floors	100 75 125	1,000 1,000 1,000
39.Vehicle barriers	See Section 1607.7.7.3	

40.Walkways and elevated platforms (other than exitways)	60	—
41.Yards and terraces, pedestrians	100	—
*42. **(Relocated from Table 16-B, 2001 CBC)** [For OSHPD 2] Storage racks and wall-hung cabinets.*	*Total Loads*[m]	

For SI: 1 inch = 25.4 mm, 1 square inch = 645.16 $mm^2$1 square foot = 0.0929 m^2, 1 pound per square foot = 0.0479 kN/m^2, 1 pound = 0.004448 kN, 1 pound per cubic foot = 16 kg/m^3

a. Floors in garages or portions of buildings used for the storage of motor vehicles shall be designed for the uniformly distributed live loads of Table 1607.1 or the following concentrated loads: (1) for garages restricted to vehicles accommodating not more than nine passengers, 3,000 pounds acting on an area of 4.5 inches by 4.5 inches; (2) for mechanical parking structures without slab or deck which are used for storing passenger vehicles only, 2,250 pounds per wheel.

b. The loading applies to stack room floors that support nonmobile, double-faced library bookstacks, subject to the following limitations:

1. The nominal bookstack unit height shall not exceed 90 inches;

2. The nominal shelf depth shall not exceed 12 inches for each face; and

3. Parallel rows of double-faced bookstacks shall be separated by aisles not less than 36 inches wide.

c. Design in accordance with the ICC *Standard on Bleachers, Folding and Telescopic Seating and Grandstands*.

d. Other uniform loads in accordance with an approved method which contains provisions for truck loadings shall also be considered where appropriate.

e. The concentrated wheel load shall be applied on an area of 20 square inches.

f. Minimum concentrated load on stair treads (on area of 4 square inches) is 300 pounds.

g. Where snow loads occur that are in excess of the design conditions, the structure shall be designed to support the loads due to the increased loads caused by drift buildup or a greater snow design determined by the building official (see Section 1608). For special-purpose roofs, see Section 1607.11.2.2.

h. See Section 1604.8.3 for decks attached to exterior walls.

i. Attics without storage are those where the maximum clear height between the joist and rafter is less than 42 inches, or where there are not two or more adjacent trusses with the same web configuration capable of containing a rectangle 42 inches high by 2 feet wide, or greater, located within the plane of the truss. For attics without storage, this live load need not be assumed to act concurrently with any other live load requirements.

j. For attics with limited storage and constructed with trusses, this live load need only be applied to those portions of the bottom chord where there are two or more adjacent trusses with the same web configuration capable of containing a rectangle 42 inches high by 2 feet wide or greater, located within the plane of the truss. The rectangle shall fit between the top of the bottom chord and the bottom of any other truss member, provided that each of the following criteria is met:

i. The attic area is accessible by a pull-down stairway or framed opening in accordance with Section 1209.2, and

ii. The truss shall have a bottom chord pitch less than 2:12.

iii. Bottom chords of trusses shall be designed for the greater of actual imposed dead load or 10 psf, uniformly distributed over the entire span.

k. Attic spaces served by a fixed stair shall be designed to support the minimum live load specified for habitable attics and sleeping rooms.

l. Roofs used for other special purposes shall be designed for appropriate loads as approved by the building official.

*m. **(Relocated from Table 16-B, 2001 CBC)** [For OSHPD 2] The minimum vertical design live load shall be as follows:*

Paper media:
12-inch-deep (305 mm) shelf 33 pounds per lineal foot (482 N/m)
15-inch-deep (381 mm) shelf 41 pounds per lineal foot (598 N/m), or
33 pounds per cubic foot (5183 N/m^3) per total volume of the rack or cabinet, whichever is less.
Film media:
18-inch-deep (457 mm) shelf 100 pounds per lineal foot (1459 N/m), or
50 pounds per cubic foot (7853 N/m^3) per total volume of the rack or cabinet, whichever is less.
Other media:
20 pounds per cubic foot (311 N/m3) or 20 pounds per square foot (958 Pa), whichever is less, but not less than actual loads.

Notation [For OSHPD]:
Authority: Health and Safety Code Section 129850
Reference: Health and Safety Code Sections 1275 and 129850

…..

SECTION 1609 WIND LOADS

1609.1 Applications. Buildings, structures and parts thereof shall be designed to withstand the minimum wind loads prescribed herein. Decreases in wind loads shall not be made for the effect of shielding by other structures.

……..

1609.1.1 Determination of wind loads. Wind loads on every building or structure shall be determined in accordance with Chapter 6 of ASCE 7. The type of opening protection required, the basic wind speed and the exposure category for a site is permitted to be determined in accordance with Section 1609 or ASCE 7. Wind shall be assumed to come from any horizontal direction and wind pressures shall be assumed to act normal to the surface considered.
Exceptions:

1. Subject to the limitations of Section 1609.1.1.1, the provisions of SBCCI SSTD 10 shall be permitted for applicable Group R-2 and R-3 buildings.
2. Subject to the limitations of Section 1609.1.1.1, residential structures using the provisions of the AF&PA WFCM.
3. Designs using NAAMM FP 1001.
4. Designs using TIA/EIA-222 for antenna-supporting structures and antennas.
5. *[For OSHPD 2] Exception in Section 1609.4 shall apply to ASCE 7.*

……

1609.4 Exposure category. For each wind direction considered, an exposure category that adequately reflects the characteristics of ground surface irregularities shall be determined for the site at which the building or structure is to be constructed. Account shall be taken of variations in ground surface roughness that arise from natural topography and vegetation as well as from constructed features.

Exception: ***(Relocated from 1619, 2001 CBC)*** *[For OSHPD 2] The wind design shall comply with Exposure C requirements unless the architect or structural engineer in general responsible charge can justify to the enforcement agency that the building site and surrounding terrain conform to the criteria for Exposure B. Minimum data to establish the exposure category shall be a topographic map (e.g., United States Geological Survey quadrangle maps) and aerial photographs except that for Exposure B sites located within urban areas, a vicinity map of sufficient size and scale to verify compliance may be provided.*

Notation [For OSHPD]:
Authority: Health and Safety Code Section 129850
Reference: Health and Safety Code Sections 1275 and 129850

…..

SECTION 1612 FLOOD LOADS

1612.1 General. Within flood hazard areas as established in Section 1612.3, all new construction of buildings, structures and portions of buildings and structures, including substantial improvement and restoration of substantial damage to buildings and structures, shall be designed and constructed to resist the effects of flood hazards and flood loads. For buildings that are located in more than one flood hazard area, the provisions associated with the most restrictive flood hazard area shall apply.

……..

1612.3 Establishment of flood hazard areas. To establish flood hazard areas, the governing body shall adopt a flood hazard map and supporting data. The flood hazard map shall include, at a minimum, areas of special flood hazard as identified by the Federal Emergency Management Agency in an engineering report entitled "The Flood Insurance Study for [INSERT NAME OF JURISDICTION]," dated [INSERT DATE OF ISSUANCE], as amended or revised with the accompanying Flood Insurance Rate Map (FIRM) and Flood Boundary and Floodway Map (FBFM) and related supporting data along with any revisions thereto. The adopted flood hazard map and supporting data are hereby adopted by reference and declared to be part of this section.

*Exception: **[For OSHPD 2]** The flood hazard map shall include, at a minimum, areas of special flood hazard as identified by the Federal Emergency Management Agency's Flood Insurance Study (FIS) adopted by the local authority having jurisdiction where the project is located.*

1612.5 Flood hazard documentation. The following documentation shall be prepared and sealed by a registered design professional and submitted to the building official:

1. For construction in flood hazard areas not subject to high-velocity wave action:
1.1. The elevation of the lowest floor, including the basement, as required by the lowest floor elevation inspection in *Section 109.3.3, Appendix Chapter 1.*

1.2. For fully enclosed areas below the design flood elevation where provisions to allow for the automatic entry and exit of floodwaters do not meet the minimum requirements in Section 2.6.2.1 of ASCE 24, construction documents shall include a statement that the design will provide for equalization of hydrostatic flood forces in accordance with Section 2.6.2.2 of ASCE 24.

1.3. For dry floodproofed nonresidential buildings, construction documents shall include a statement that the dry floodproofing is designed in accordance with ASCE 24.

2. For construction in flood hazard areas subject to high-velocity wave action:
2.1. The elevation of the bottom of the lowest horizontal structural member as required by the lowest floor elevation inspection in *Section 109.3.3,Appendix Chapter 1.*

2.2. Construction documents shall include a statement that the building is designed in accordance with ASCE 24, including that the pile or column foundation and building or structure to be attached thereto is designed to be anchored to resist flotation, collapse and lateral movement due to the effects of wind and flood loads acting simultaneously on all building components, and other load requirements of Chapter 16.
2.3. For breakaway walls designed to resist a nominal load of less than 10 psf (0.48 kN/m^2) or more than 20 psf (0.96 kN/m^2), construction documents shall include a statement that the breakaway wall is designed in accordance with ASCE 24.

Notation [For OSHPD]:
Authority: Health and Safety Code Section 129850
Reference: Health and Safety Code Sections 1275 and 129850

SECTION 1613 EARTHQUAKE LOADS

1613.1 Scope. Every structure, and portion thereof, including nonstructural components that are permanently attached to structures and their supports and attachments, shall be designed and constructed to resist the effects of earthquake motions in accordance with ASCE 7, excluding Chapter 14 and Appendix 11A. The seismic design category for a structure is permitted to be determined in accordance with Section 1613 or ASCE 7.

Exceptions:
1. Detached one- and two-family dwellings, assigned to Seismic Design Category A, B or C, or located where the mapped short-period spectral response acceleration, S_S, is less than 0.4 g.
2. The seismic-force-resisting system of wood-frame buildings that conform to the provisions of Section 2308 are not

required to be analyzed as specified in this section. *[For OSHPD 2] Not permitted by OSHPD, see section 2308.*
3. Agricultural storage structures intended only for incidental human occupancy.
4. Structures that require special consideration of their response characteristics and environment that are not addressed by this code or ASCE 7 and for which other regulations provide seismic criteria, such as vehicular bridges, electrical transmission towers, hydraulic structures, buried utility lines and their appurtenances and nuclear reactors.
5. [For OSHPD 2] Seismic Design Category shall be per exception to Section 1613.5.6.

1613.5.1 Mapped acceleration parameters. The parameters S_s and S_1 shall be determined from the 0.2 and 1-second spectral response accelerations shown on Figures 1613.5(1) through 1613.5(14). Where S_1 is less than or equal to 0.04 and S_s is less than or equal to 0.15, the structure is permitted to be assigned to Seismic Design Category A.

Exception: [For OSHPD 2] Seismic Design Category shall be per exception to Section 1613.5.6.

……..

1613.5.6 Determination of seismic design category. Occupancy Category I, II or III structures located where the mapped spectral response acceleration parameter at 1-second period, S_l, is greater than or equal to 0.75 shall be assigned to Seismic Design Category E. Occupancy Category IV structures located where the mapped spectral response acceleration parameter at 1-second period, S_1, is greater than or equal to 0.75 shall be assigned to Seismic Design Category F. All other structures shall be assigned to a seismic design category based on their occupancy category and the design spectral response acceleration coefficients, S_{DS} and S_{D1}, determined in accordance with Section 1613.5.4 or the site-specific procedures of ASCE 7. Each building and structure shall be assigned to the more severe seismic design category in accordance with Table 1613.5.6(1) or 1613.5.6(2), irrespective of the fundamental period of vibration of the structure, T.

TABLE 1613.5.6(1) SEISMIC DESIGN CATEGORY BASED ON SHORT-PERIOD RESPONSE ACCELERATIONS

VALUE OF S_{DS}	OCCUPANCY CATEGORY		
	I or II	III	IV
$S_{DS} < 0.167g$	A	A	A
$0.167g \le S_{DS} < 0.33g$	B	B	C
$0.33g \le S_{DS} < 0.50g$	C	C	D
$0.50g \le S_{DS}$	D	D	D

TABLE 1613.5.6(2) SEISMIC DESIGN CATEGORY BASED ON 1-SECOND PERIOD RESPONSE ACCELERATION

VALUE OFS_{D1}	OCCUPANCY CATEGORY		
	I or II	III	IV
$S_{D1} < 0.067g$	A	A	A
$0.067g \le S_{D1} < 0.133g$	B	B	C

$0.133g \leq S_{D1} < 0.20g$	C	C	D
$0.20g \leq S_{D1}$	D	D	D

Exception: [For OSHPD 2] Structures not assigned to seismic design category E or F above shall be assigned to seismic design category D.

1613.5.6.1 Alternative seismic design category determination. Where S_1 is less than 0.75, the seismic design category is permitted to be determined from Table 1613.5.6(1) alone when all of the following apply:
1. In each of the two orthogonal directions, the approximate fundamental period of the structure, T_a, in each of the two orthogonal directions determined in accordance with Section 12.8.2.1 of ASCE 7, is less than 0.8 T_s determined in accordance with Section 11.4.5 of ASCE 7.
2. In each of the two orthogonal directions, the fundamental period of the structure used to calculate the story drift is less than T_s.
3. Equation 12.8-2 of ASCE 7 is used to determine the seismic response coefficient, C_s.
4. The diaphragms are rigid as defined in Section 12.3.1 in ASCE 7 or for diaphragms that are flexible, the distance between vertical elements of the seismic-force-resisting system does not exceed 40 feet (12 192 mm).

Exception: [For OSHPD 2] Seismic design category shall be determined per exception to Section 1613.5.6.

1613.5.6.2 Simplified design procedure. Where the alternate simplified design procedure of ASCE 7 is used, the seismic design category shall be determined in accordance with ASCE 7.

Exception: [For OSHPD 2] Seismic design category shall be determined per exception to Section 1613.5.6.

…….

1613.6.1 Assumption of flexible diaphragm. Add the following text at the end of Section 12.3.1.1 of ASCE 7:

Diaphragms constructed of wood structural panels or untopped steel decking shall also be permitted to be idealized as flexible, provided all of the following conditions are met:

1. Toppings of concrete or similar materials are not placed over wood structural panel diaphragms except for nonstructural toppings no greater than $1^1/_2$inches (38 mm) thick.
2. Each line of vertical elements of the lateral-force-resisting system complies with the allowable story drift of Table 12.12-1.
3. Vertical elements of the lateral-force-resisting system are light-framed walls sheathed with wood structural panels rated for shear resistance or steel sheets.
4. Portions of wood structural panel diaphragms that cantilever beyond the vertical elements of the lateral-force-resisting system are designed in accordance with Section 2305.2.5 of the *California* ~~*International*~~ *Building Code*.

Notation [For OSHPD]:
Authority: Health and Safety Code Section 129850
Reference: Health and Safety Code Sections 1275 and 129850

Chapter 16A - Structural Design

2001 CBC	PROPOSED ADOPTION	OSHPD		DSA-SS	Comments
		1	4		
	Adopt entire chapter without amendments				
	Adopt entire chapter with amendments listed below	X	X	X	
	Adopt only those sections listed below				
	1601A.1.1 CA	X	X	X	
	1601A.1.2 CA	X	X	X	
	1601A.2 CA	X	X	X	
	1601A.3 CA	X	X	X	
1641A CA, 1602A	*1602A.1*	X	X	X	Relocated existing California Building Standards into IBC format
	1603A.1	X	X	X	
1633A.2.3	*1603A.1.5.1 CA*	X	X	X	Relocated existing California Building Standards into IBC format
1614A.1 CA	*1603A.3.1 CA*	X	X	X	Relocated existing California Building Standards into IBC format
1607A.3.5.2 CA	*1603A.3.2 CA*	X	X	X	Relocated existing California Building Standards into IBC format
Table 16A-W	*Table 1604A.3*	X	X	X	Relocated existing California Building Standards into IBC format
1613A.2 CA	*1604A.3.7 CA*	X	X	X	Relocated existing California Building Standards into IBC format
1613A.2.1 CA	*1604A.3.7.1 CA*	X	X	X	Relocated existing California Building Standards into IBC format
1613A.2.3 CA	*1604A.3.7.2 CA*	X	X	X	Relocated existing California Building Standards into IBC format
1613A.1	*1604A.3.8 CA*	X	X	X	Relocated existing California Building Standards into IBC format
Table 16A-K	*Table 1604A.5*	X	X	X	Relocated existing California Building Standards into IBC format

1605A.5 CA	*1604A.11 CA*	X	X	X	Relocated existing California Building Standards into IBC format
	1605A.2.1.1			X	
1632A.1	*1605A.3.2*	X	X	X	Relocated existing California Building Standards into IBC format
	1605A.5	X	X	X	
1607A.4.1	*1606A.3 CA*	X	X	X	Relocated existing California Building Standards into IBC format
Table 16A-A, 16A- B	*Table 1607A.1*	X	X	X	Relocated existing California Building Standards into IBC format
1607A.4.4	*1607A.11.2.2*	X	X	X	Relocated existing California Building Standards into IBC format
1611A.5	*1607A.13*	X	X	X	Relocated existing California Building Standards into IBC format
	1608A.2	X	X	X	
	Table 1608.2				Deleted
	1609A.1.1.2 CA			X	
1620A	*1609A.1.3 CA*	X	X	X	Relocated existing California Building Standards into IBC format
1619A	*1609A.4*	X	X	X	Relocated existing California Building Standards into IBC format
	1612A.3	X	X	X	
	1612A.5	X	X	X	Editorial
	1613A.1	X	X	X	
1626A.4 CA	*1613A.1.1 CA*	X	X	X	Relocated existing California Building Standards into IBC format
1627A & 1641A CA	*1613A.2*	X	X	X	Relocated existing California Building Standards into IBC format
	1613A.5.1	X	X	X	
	FIGURES 1613.5 (1) – (14)	X	X	X	Use Figures in Chapter 16
	1613A.5.6	X	X	X	
	Table 1613.5.6 (1)				Deleted
	Table 1613.5.6(2)				Deleted
	1613A.5.6.1	X	X	X	

1630A.2.3	*1613A.5.6.2*	X	X	X	Relocated existing California Building Standards into IBC format
	1614A CA	X	X	X	Modifications to ASCE 7
1629A.8.3,1630A.4.2	*1614A.1.4 CA*	X	X	X	Relocated existing California Building Standards into IBC format
1629A.9.1, 1629A.9.4 CA, 1629A.9.5 CA	*1614A.1.5 CA*	X	X	X	Relocated existing California Building Standards into IBC format
1630A.1.1	*1614A.1.6 CA*	X	X	X	Relocated existing California Building Standards into IBC format
1631A.5.4	*1614A.1.9 CA*	X	X	X	Relocated existing California Building Standards into IBC format
1633A.2.12	*1614A.1.10 CA*	X	X	X	Relocated existing California Building Standards into IBC format
2501A.5 CA,	*1614A.1.12 CA*	X	X	X	Relocated existing California Building Standards into IBC format
1632A.6 CA	*1614A.1.13 CA*	X	X	X	Relocated existing California Building Standards into IBC format
1633A.2.13.1 CA	*1614A.1.14 CA*	X	X	X	Relocated existing California Building Standards into IBC format
1633A.2.13.1 CA	*1614A.1.15 CA*	X	X	X	Relocated existing California Building Standards into IBC format
1657A.3	*1614A.1.17 CA*	X	X	X	Relocated existing California Building Standards into IBC format
1661A.2.7	*1614A.1.18 CA*	X	X	X	Relocated existing California Building Standards into IBC format
1661A.2.8, Item #3 & #6	*1614A.1.19 CA*	X	X	X	Relocated existing California Building Standards into IBC format
1661A.2.9	*1614A.1.20 CA*	X	X	X	Relocated existing California Building Standards into IBC format
1661A.2.8, Item #5	*1614A.1.21 CA*	X	X	X	Relocated existing California Building Standards into IBC format
1661A.3.2	*1614A.1.22 CA*	X	X	X	Relocated existing California Building Standards into IBC

					format
1657A.5.3.3	*1614A.1.23 CA*	X	X	X	Relocated existing California Building Standards into IBC format
1659A.4.2	*1614A.1.24 CA*	X	X	X	Relocated existing California Building Standards into IBC format
1657A.5.2	*1614A.1.25 CA*	X	X	X	Relocated existing California Building Standards into IBC format
1657A.5.3	*1614A.1.26 CA*	X	X	X	Relocated existing California Building Standards into IBC format
1657A.5.1.1 CA	*1614A.1.27 CA*	X	X	X	Relocated existing California Building Standards into IBC format
1664A.1 CA	*1614A.1.28 CA*	X	X	X	Relocated existing California Building Standards into IBC format

REPEAL OF EXISTING CALIFORNIA AMENDMENTS IN PART OR IN WHOLE THAT ARE NO LONGER NECESSARY AS FOLLOWS:

2001 CBC DIVISION I – GENERAL DESIGN REQUIREMENTS

2001 CBC SECTION 1605A – DESIGN: Repeal amendments in following subsections.

~~*1601A.2, 1601A.2.1, 1601A.3*~~ *and* ~~*1605A.4*~~.

2001 CBC SECTION 1607A – LIVE LOADS: Repeal amendments in following subsections.

~~*1607A.3.3, 1607A.3.5*~~ and ~~*1607A.6*~~.

2001 CBC SECTION 1611A – OTHER MINIMUM LOADS: Repeal amendments in following subsections.

~~*1611A.11.3, 1611A.12,1611A.12.1*~~ And ~~*1611A.12.2*~~.

2001 CBC SECTION 1612A – COMBINATION OF LOADS: Repeal amendments in following subsections.

~~*1612A.2.1, 1612A.3.1*~~ and ~~*1612A.3.2*~~.

2001 CBC SECTION 1613A – DEFLECTION: Repeal amendments in following subsections.

~~*1613A.2.2.1, 1613A.2.2.2*~~, and ~~*1613A.2.2.3*~~.

2001 CBC DIVISION II – SNOW LOADS

2001 CBC SECTION 1614A – SNOW LOADS: Repeal amendment in the following subsection.

~~*1614A*~~.

2001 CBC DIVISION III – WIND DESIGN

~~2001 CBC SECTION 1615A – GENERAL:~~ Repeal all amendments in this section.

~~2001 CBC SECTION 1616A – DEFINITIONS~~: Repeal all amendments in this section.

~~2001 CBC SECTION 1621A – PRIMARY FRAMES AND SYSTEMS:~~ Repeal all amendments in this section.

~~2001 CBC SECTION 1622A – ELEMENTS AND COMPONENTS OF STRUCTURES:~~ Repeal all amendments in this section.

2001 CBC DIVISION IV – EARTHQUAKE DESIGN

2001 CBC SECTION 1626A – GENERAL: Repeal amendments in following subsections.

~~*1626A.1*~~ and ~~*1626A.2*~~.

~~2001 CBC SECTION 1627A – DEFINITIONS:~~ Repeal all amendments in this section.

2001 CBC SECTION 1629A – CRITERIA SELECTION: Repeal amendments in following subsections.

~~*1629A.4.1*~~, ~~*1629A.5.3*~~, ~~*1629A.6.5, 1629A.8.3*~~, ~~*1629A.8.4*~~, ~~*1629A.9.1, 1629A.9.4,1629A.5, 1629A.10.1*~~ and ~~*1629A.10.2*~~.

2001 CBC SECTION 1630A – Minimum Design Lateral Forces and Related Effects: Repeal amendments in following subsections.

~~*1630A.1.1*~~ except item # 5, ~~*1630A.1.2*~~, ~~*1630A.2.2*~~, ~~*1630A.7*~~ and ~~*1630A.10.2*~~.

2001 CBC SECTION 1631A – DYNAMIC ANALYSIS PROCEDURE: Repeal amendments in following subsections.

~~*1631A.2*~~, ~~*1631A.3, 1631A.5.4*~~ and ~~*631A.6.3.2*~~ .

2001 CBC SECTION 1632A – LATERAL FORCE ON ELEMENTS OF STRUCTURES, NONSTRUCTURAL COMPONENTS AND EQUIPMENT SUPPORTED BY STRUCTURES: Repeal amendment in the following subsection.

~~*1632A.1, 1632A.2 and 1632A.6*~~.

2001 CBC SECTION 1633A – DETAILED SYSTEM DESIGN REQUIREMENTS: Repeal amendments in following subsections.

~~*1633A.1*~~, ~~*1633A.2.7, 1633A.2.9*~~ and ~~*1633A.2.13*~~.

~~2001 CBC SECTION 1635A – EARTHQUAKE-RECORDING INSTRUMENTATIONS:~~ Repeal all amendments in this section.

2001 CBC CHAPTER 16A – TABLES AND FIGURES: Repeal amendments in following tables and figure.

~~*Tables 16A-A, 16A-B,16A-D*~~, ~~*16A-E*~~, ~~*16A-H*~~, ~~*16A-I, 16A-K, 16A-L, 16A-M*~~, ~~*16A-N*~~, ~~*16A-O*~~, ~~*16A-P*~~, ~~*16A-V*~~, ~~*16-W*~~ and ~~*Figure 16A-2*~~.

2001 CBC DIVISION VI-R – EARTHQUAKE EVALUATION ANS DESIGN OF EXISTING HOSPITAL BUILDINGS.

2001 CBC SECTION 1640A – GENERAL: Repeal amendments in following subsections.

~~*1640A.4*~~, ~~*1640A.5*~~, ~~*1640A.6*~~, ~~*1640A.8.1*~~, ~~*1640A.8.2*~~, and ~~*1640A.8.3*~~

~~2001 CBC SECTION 1641A – DEFINITIONS:~~ Repeal all amendments in this section.

~~2001 CBC SECTION 1642A – SYMBOLS AND NOTATIONS:~~ Repeal all amendments in this section.

~~*2001 CBC SECTION 1643A – CRITERIA SELECTION*~~ : Repeal all amendments in this section.

~~*2001 CBC SECTION 1644A – METHOD A*~~: Repeal all amendments in this section.

~~*2001 CBC SECTION 1645A – PROCEDURES FOR THE CLASSIFICATION OF ELEMENTS INTO THE DUCTILE, LIMITED-DUCTILE AND NONDUCTILE CATEGORIES*~~: Repeal all amendments in this section.

~~*2001 CBC SECTION 1646A – DETAILED SYSTEM DESIGN REQUIREMENTS*~~: Repeal all amendments in this section.

~~*2001 CBC SECTION 1647A – NONBUILDING STRUCTURES*~~: Repeal all amendments in this section.

2001 CBC SECTION 1648A – METHOD B: Repeal amendments in following subsections.

~~*1648A.2*~~ including all subsections and ~~*1648A.3*~~.

2001 CBC CHAPTER 16A – TABLES AND FIGURES: Repeal amendments in following tables and figures.

~~*TABLES 16-R-1*~~, ~~*16-R-2*~~, ~~*16-R-3*~~, ~~*16-R-4*~~, ~~*16-R-5*~~, ~~*16-R-1*~~ and ~~*Figure 16-R-2*~~.

2001 CBC APPENDIX CHAPTER 16A

2001 CBC DIVISION VII – EARTHQUAKE REGULATIONS FOR SEISMIC ISOLATED STRUCTURES

~~*2001 CBC SECTION 1654A - GENERAL*~~: Repeal all amendments in this section.

~~*2001 CBC SECTION 1655A - DEFINITIONS*~~: Repeal all amendments in this section.

~~*2001 CBC SECTION 1656A – SYMBOLS AND NOTATIONS*~~: Repeal all amendments in this section.

2001 CBC SECTION 1657A – CRITERIA SELECTION: Repeal amendment in the following subsection.

~~*1657A.5.1*~~ and ~~*1657A.5.3*~~ Item # 1.

2001 CBC SECTION 1658A – STATIC LATERAL RESPONSE PROCEDURE: Repeal amendment in the following subsection.

~~*1658A.4.3*~~.

2001 CBC SECTION 1659A – DYNAMIC LATERAL RESPONSE PROCEDURE: Repeal amendment in the following subsection.

~~*1659A.8*~~.

2001 CBC SECTION 1660A – LATERAL LOAD ON ELEMANTS OF STRUCTURES AND NONSTRUCTURAL COMPONENTS SUPPORTED BY STRUCTURES: Repeal amendment in the following subsection.

~~*1660A.1*~~.

2001 CBC SECTION 1661A – DETAILED SYSTEMS REQUIREMENTS: Repeal amendment in the following subsection.

~~*1661A.2.6*~~.

2001 CBC SECTION 1664A – DESIGN AND CONSTRUCTION REVIEW: Repeal amendment in the following subsection.

~~*1664A.3*~~.

2001 CBC SECTION 1664A – DESIGN AND CONSTRUCTION REVIEW: Repeal amendment in the following subsection.

~~*1664A.3*~~.

2001 CBC SECTION 1665A – REDUCED TEST OF ISOLATION SYSTEM: Repeal amendment in the following subsection.

~~*1665A.2.3*~~.

2001 CBC CHAPTER 16A – TABLES AND FIGURES: Repeal amendment in the following table.

~~*TABLE A-16-E*~~.

EXPRESS TERMS

SECTION 1601*A* - GENERAL

1601*A*.1 Scope. The provisions of this chapter shall govern the structural design of buildings, structures and portions thereof regulated by this code.

1601A.1.1 Application *The scope of application of Chapter 16A is as follows:*

1. Applications listed in Section 109.2, regulated by the Division of the State Architect-Structural Safety (DSA-SS). These applications include public elementary and secondary schools, community colleges and state-owned or state-leased essential services buildings.

2. Applications listed in Section 110.1, and 110.4, regulated by the Office of Statewide Health Planning and Development (OSHPD). These applications include hospitals, skilled nursing facilities, intermediate care facilities and correctional treatment centers.

Exception: [For OSHPD 2]: *Single-story Type V skilled nursing or intermediate care facilities utilizing wood-frame or light-steel-frame construction as defined in Health and Safety Code Section 129725, which shall comply with CBC Chapter 16 and any applicable amendments therein.*

1601A.1.2 Amendments in this chapter. *DSA - SS and OSHPD adopt this chapter and all amendments.*

Exception: *Amendments adopted by only one agency appear in this chapter preceded with the appropriate acronym of the adopting agency, as follows:*

1. Division of the State Architect - Structural Safety:

[DSA-SS] - *For applications listed in Section 109.2*

2. Office of Statewide Health Planning and Development:

[OSHPD 1] *- For applications listed in Section 110.1*

[OSHPD 4] *- For applications listed in Section 110.4*

1601A.2 References. *All referenced codes and standards listed in Chapter 35 shall include all the modifications contained in this code to referenced standards. In the event of any discrepancy between this code and a referenced standard, refer to Section 101.7*

1601A.3 Enforcement Agency Approval. *In addition to requirements of Californnia Code of Regulations (C.C.R.) Title 24, Parts 1 & 2, any aspect of project design, construction, quality assurance, or quality control programs for which this code requires approval by the design professional, are also subject to approval by the enforcement agency.*

SECTION 1602*A* - DEFINITIONS AND NOTATIONS

1602*A*.1 Definitions. The following words and terms shall, for the purposes of this chapter, have the meanings shown herein.

ALLOWABLE STRESS DESIGN. A method of proportioning structural members, such that elastically computed stresses produced in the members by nominal loads do not exceed specified allowable stresses (also called "working stress design").

BALCONY, EXTERIOR. An exterior floor projecting from and supported by a structure without additional independent supports.

DEAD LOADS. The weight of materials of construction incorporated into the building, including but not limited to walls, floors, roofs, ceilings, stairways, built-in partitions, finishes, cladding and other similarly incorporated architectural and structural items, and the weight of fixed service equipment, such as cranes, plumbing stacks and risers, electrical feeders, heating, ventilating and air-conditioning systems and fire sprinkler systems.

DECK. An exterior floor supported on at least two opposing sides by an adjacent structure, and/or posts, piers or other independent supports.

DESIGN STRENGTH. The product of the nominal strength and a resistance factor (or strength reduction factor).

DIAPHRAGM. A horizontal or sloped system acting to transmit lateral forces to the vertical-resisting elements. When the term "diaphragm" is used, it shall include horizontal bracing systems.

> **Diaphragm, blocked.** In light-frame construction, a diaphragm in which all sheathing edges not occurring on a framing member are supported on and fastened to blocking.
>
> **Diaphragm boundary.** In light-frame construction, a location where shear is transferred into or out of the diaphragm sheathing. Transfer is either to a boundary element or to another force-resisting element.
>
> **Diaphragm chord.** A diaphragm boundary element perpendicular to the applied load that is assumed to take axial stresses due to the diaphragm moment.
>
> **Diaphragm flexible.** A diaphragm is flexible for the purpose of distribution of story shear and torsional moment where so indicated in Section 12.3.1 of ASCE 7, as modified in Section 1613*A*.6.1.
>
> **Diaphragm, rigid.** A diaphragm is rigid for the purpose of distribution of story shear and torsional moment when the lateral deformation of the diaphragm is less than or equal to two times the average story drift.

DURATION OF LOAD. The period of continuous application of a given load, or the aggregate of periods of intermittent applications of the same load.

(Relocated from 1641A, 2001 CBC) ***ENFORCEMENT AGENT.*** *That individual within the agency or organization charged with responsibility for agency or organization compliance with the requirements of this Code. Used interchangeably with Building Official and Code Official.*

ESSENTIAL FACILITIES. Buildings and other structures that are intended to remain operational in the event of extreme environmental loading from flood, wind, snow or earthquakes.

FABRIC PARTITIONS. A partition consisting of a finished surface made of fabric, without a continuous rigid backing, that is directly attached to a framing system in which the vertical framing members are spaced greater than 4 feet (1219 mm) on center.

FACTORED LOAD. The product of a nominal load and a load factor.

GUARD. See Section 1002.1.

(Relocated from 1602A, 2001 CBC) ***HOSPITAL BUILDING*** *~~[for OSHPD 1, 2, 3 and 4]~~. Any building defined in Section 129725, Health and Safety Code.*

IMPACT LOAD. The load resulting from moving machinery, elevators, craneways, vehicles and other similar forces and kinetic loads, pressure and possible surcharge from fixed or moving loads.

LIMIT STATE. A condition beyond which a structure or member becomes unfit for service and is judged to be no longer useful for its intended function (serviceability limit state) or to be unsafe (strength limit state).

LIVE LOADS. Those loads produced by the use and occupancy of the building or other structure and do not include construction or environmental loads such as wind load, snow load, rain load, earthquake load, flood load or dead load.

LIVE LOADS (ROOF). Those loads produced (1) during maintenance by workers, equipment and materials; and (2) during the life of the structure by movable objects such as planters and by people.

LOAD AND RESISTANCE FACTOR DESIGN (LRFD). A method of proportioning structural members and their connections using load and resistance factors such that no applicable limit state is reached when the structure is subjected to appropriate load combinations. The term "LRFD" is used in the design of steel and wood structures.

LOAD EFFECTS. Forces and deformations produced in structural members by the applied loads.

LOAD FACTOR. A factor that accounts for deviations of the actual load from the nominal load, for uncertainties in the analysis that transforms the load into a load effect, and for the probability that more than one extreme load will occur simultaneously.

LOADS. Forces or other actions that result from the weight of building materials, occupants and their possessions, environmental effects, differential movement and restrained dimensional changes. Permanent loads are those loads in which variations over time are rare or of small magnitude, such as dead loads. All other loads are variable loads (see also "Nominal loads").

NOMINAL LOADS. The magnitudes of the loads specified in this chapter (dead, live, soil, wind, snow, rain, flood and earthquake).

OCCUPANCY CATEGORY. A category used to determine structural requirements based on occupancy.

OTHER STRUCTURES. Structures, other than buildings, for which loads are specified in this chapter.

PANEL (PART OF A STRUCTURE). The section of a floor, wall or roof comprised between the supporting frame of two adjacent rows of columns and girders or column bands of floor or roof construction.

RESISTANCE FACTOR. A factor that accounts for deviations of the actual strength from the nominal strength and the manner and consequences of failure (also called "strength reduction factor").

STRENGTH, NOMINAL. The capacity of a structure or member to resist the effects of loads, as determined by computations using specified material strengths and dimensions and equations derived from accepted principles of structural mechanics or by field tests or laboratory tests of scaled models, allowing for modeling effects and differences between laboratory and field conditions.

STRENGTH, REQUIRED. Strength of a member, cross section or connection required to resist factored loads or related internal moments and forces in such combinations as stipulated by these provisions.

STRENGTH DESIGN. A method of proportioning structural members such that the computed forces produced in the members by factored loads do not exceed the member design strength [also called "load and resistance factor design" (LRFD)]. The term "strength design" is used in the design of concrete and masonry structural elements.

VEHICLE BARRIER SYSTEM. A system of building components near open sides of a garage floor or ramp or building walls that act as restraints for vehicles.

NOTATIONS.

D = Dead load.

E = Combined effect of horizontal and vertical earthquake induced forces as defined in Section 12.4.2 of ASCE 7.

E_m = Maximum seismic load effect of horizontal and vertical seismic forces as set forth in Section 12.4.3 of ASCE 7.

F = Load due to fluids with well-defined pressures and maximum heights.

F_a = Flood load.

H = Load due to lateral earth pressures, ground water pressure or pressure of bulk materials.

L = Live load, except roof live load, including any permitted live load reduction.

L_r = Roof live load including any permitted live load reduction.

R = Rain load.

S = Snow load.

T = Self-straining force arising from contraction or expansion resulting from temperature change, shrinkage, moisture change, creep in component materials, movement due to differential settlement or combinations thereof.

W = Load due to wind pressure.

SECTION 1603A - CONSTRUCTION DOCUMENTS

1603A.1 General. Construction documents shall show the size, section and relative locations of structural members with floor levels, column centers and offsets dimensioned. The design loads and other information pertinent to the structural design required by Sections 1603A.1.1 through 1603A.1.8 shall be indicated on the construction documents.

[For OSHPD 1] *Additional requirements are included in Section 7-115 and 7-125 of the Building Standards Administration Code (Part 1, Title 24, C.C.R).*

[For DSA-SS] *Additional requirements are included in Section 4-115 and 4-125 of the Building Standards Administration Code (Part 1, Title 24, C.C.R).*

Exception: Construction documents for buildings constructed in accordance with the conventional light-frame construction provisions of Section 2308 shall indicate the following structural design information:

1. Floor and roof live loads.

2. Ground snow load, P_g.

3. Basic wind speed (3-second gust), miles per hour (mph) (km/hr) and wind exposure.

4. Seismic design category and site class.

5. Flood design data, if located in flood hazard areas established in Section 1612A.3.

1603A.1.1 Floor live load. The uniformly distributed, concentrated and impact floor live load used in the design shall be indicated for floor areas. Use of live load reduction in accordance with Section 1607A.9 shall be indicated for each type of live load used in the design.

1603A.1.2 Roof live load. The roof live load used in the design shall be indicated for roof areas (Section 1607A.11).

1603A.1.3 Roof snow load. The ground snow load, P_g, shall be indicated. In areas where the ground snow load, P_g, exceeds 10 pounds per square foot (psf) (0.479 kN/m^2), the following additional information shall also be provided, regardless of whether snow loads govern the design of the roof:

1. Flat-roof snow load, P_f.

2. Snow exposure factor, C_e.

3. Snow load importance factor, I.

4. Thermal factor, C_t.

1603A.1.4 Wind design data. The following information related to wind loads shall be shown, regardless of whether wind loads govern the design of the lateral-force-resisting system of the building:

1. Basic wind speed (3-second gust), miles per hour (km/hr).

2. Wind importance factor, I, and occupancy category.

3. Wind exposure, if more than one wind exposure is utilized, the wind exposure and applicable wind direction shall be indicated.

4. The applicable internal pressure coefficient.

5. Components and cladding. The design wind pressures in terms of psf (kN/m^2) to be used for the design of exterior component and cladding materials not specifically designed by the registered design professional.

1603A.1.5 Earthquake design data. The following information related to seismic loads shall be shown, regardless of whether seismic loads govern the design of the lateral-force-resisting system of the building:

1. Seismic importance factor, I, and occupancy category.

2. Mapped spectral response accelerations, S_S and S_1.

3. Site class.

4. Spectral response coefficients, S_{DS} and S_{D1}.

5. Seismic design category.

6. Basic seismic-force-resisting system(s).

7. Design base shear.

8. Seismic response coefficient(s), C_S.

9. Response modification factor(s), R.

10. Analysis procedure used.

1603A.1.5.1 *(Relocated from 1633A.2.3, 2001 CBC)* ***Connections.*** *Connections that resist design seismic forces shall be designed and detailed on the design drawings.*

1603A.1.6 Flood design data. For buildings located in whole or in part in flood hazard areas as established in Section 1612A.3, the documentation pertaining to design, if required in Section 1612A.5, shall be included and the following information, referenced to the datum on the community's Flood Insurance Rate Map (FIRM), shall be shown, regardless of whether flood loads govern the design of the building:

1. In flood hazard areas not subject to high-velocity wave action, the elevation of the proposed lowest floor, including the basement.

2. In flood hazard areas not subject to high-velocity wave action, the elevation to which any nonresidential building will be dry floodproofed.

3. In flood hazard areas subject to high-velocity wave action, the proposed elevation of the bottom of the lowest horizontal structural member of the lowest floor, including the basement.

1603A.1.7 Special loads. Special loads that are applicable to the design of the building, structure or portions thereof shall be indicated along with the specified section of this code that addresses the special loading condition.

1603A.1.8 Systems and components requiring special inspections for seismic resistance. Construction documents or specifications shall be prepared for those systems and components requiring special inspection for seismic resistance as specified in Section 1707*A*.1 by the registered design professional responsible for their design and shall be submitted for approval in accordance with Section 106.1*, Appendix Chapter 1*. Reference to seismic standards in lieu of detailed drawings is acceptable.

1603*A*.2 Restrictions on loading. It shall be unlawful to place, or cause or permit to be placed, on any floor or roof of a building, structure or portion thereof, a load greater than is permitted by these requirements.

1603*A*.3 Live loads posted. Where the live loads for which each floor or portion thereof of a commercial or industrial building is or has been designed to exceed 50 psf (2.40 kN/m^2), such design live loads shall be conspicuously posted by the owner in that part of each story in which they apply, using durable signs. It shall be unlawful to remove or deface such notices.

1603A.3.1 *(Relocated from 1614A.1, 2001 CBC)* ***Snow Load Posting.*** *Snow loads used in design shall be posted as for live loads. ~~See Section 1607A.3.5. Snow accumulation removal shall begin when the depth of snow creates loadings of 75 percent of the design values.~~*

1603A.3.2 *(Relocated from 1607A.3.5.2, 2001 CBC)* ***[For OSHPD 1 & 4] Load Posting Responsibility****. The hospital owner or hospital governing board shall be responsible for keeping the actual load below the allowable limits.*

1603*A*.4 Occupancy permits for changed loads. Occupancy permits for buildings hereafter erected shall not be issued until the floor load signs, required by Section 1603*A*.3, have been installed.

SECTION 1604*A* GENERAL DESIGN REQUIREMENTS

1604*A*.1 General. Building, structures and parts thereof shall be designed and constructed in accordance with strength design, load and resistance factor design, allowable stress design, empirical design or conventional construction methods, as permitted by the applicable material chapters.

1604*A*.2 Strength. Buildings and other structures, and parts thereof, shall be designed and constructed to support safely the factored loads in load combinations defined in this code without exceeding the appropriate strength limit states for the materials of construction. Alternatively, buildings and other structures, and parts thereof, shall be designed and constructed to support safely the nominal loads in load combinations defined in this code without exceeding the appropriate specified allowable stresses for the materials of construction.

Loads and forces for occupancies or uses not covered in this chapter shall be subject to the approval of the building official.

1604*A*.3 Serviceability. Structural systems and members thereof shall be designed to have adequate stiffness to limit deflections and lateral drift. See Section 12.12.1 of ASCE 7 for drift limits applicable to earthquake loading.

TABLE 1604*A*.3 - DEFLECTION LIMITS[a, b, c, h, i]

CONSTRUCTION	*L*	*S* or *W*[f]	*D* + *L*[d,g]
Roof members:[e]			
Supporting plaster ceiling	*l*/360	*l*/360	*l*/240
Supporting nonplaster ceiling	*l*/240	*l*/240	*l*/180
Not supporting ceiling	*l*/180	*l*/180	*l*/120
Floor members	*l*/360	—	*l*/240
Exterior walls and interior partitions:			
With brittle finishes	—	*l*/240	—
With flexible finishes	—	~~*l*/120~~ *l*/180	—
(Relocated from Table 16A-W, 2001 CBC)			

Veneered walls, anchored veneers and adhered veneers over 1 inch (25 mm) thick, including the mortar backing		*l/480*	
Farm buildings	—	—	*l*/180
Greenhouses	—	—	*l*/120

For SI: 1 foot = 304.8 mm.

a. For structural roofing and siding made of formed metal sheets, the total load deflection shall not exceed *l*/60. For secondary roof structural members supporting formed metal roofing, the live load deflection shall not exceed *l*/150. For secondary wall members supporting formed metal siding, the design wind load deflection shall not exceed *l*/90. For roofs, this exception only applies when the metal sheets have no roof covering.

b. Interior partitions not exceeding 6 feet in height and flexible, folding and portable partitions are not governed by the provisions of this section. The deflection criterion for interior partitions is based on the horizontal load defined in Section 1607*A*.13.

c. See Section 2403 for glass supports.

d. For wood structural members having a moisture content of less than 16 percent at time of installation and used under dry conditions, the deflection resulting from $L + 0.5D$ is permitted to be substituted for the deflection resulting from $L + D$.

e. The above deflections do not ensure against ponding. Roofs that do not have sufficient slope or camber to assure adequate drainage shall be investigated for ponding. See Section 1611*A* for rain and ponding requirements and Section 1503.4 for roof drainage requirements.

f. The wind load is permitted to be taken as 0.7 times the "component and cladding" loads for the purpose of determining deflection limits herein.

g. For steel structural members, the dead load shall be taken as zero.

h. For aluminum structural members or aluminum panels used in skylights and sloped glazing framing, roofs or walls of sunroom additions or patio covers, not supporting edge of glass or aluminum sandwich panels, the total load deflection shall not exceed $^1/_{60}$. For aluminum sandwich panels used in roofs or walls of sunroom additions or patio covers, the total load deflection shall not exceed $^1/_{120}$.

i. For cantilever members, *l* shall be taken as twice the length of the cantilever.

1604*A*.3.1 Deflections. The deflections of structural members shall not exceed the more restrictive of the limitations of Sections 1604*A*.3.2 through ~~1604.3.5~~ *1604A.3.8* or that permitted by Table 1604*A*.3.

1604*A*.3.2 Reinforced concrete. The deflection of reinforced concrete structural members shall not exceed that permitted by ACI 318.

1604 *A*.3.3 Steel. The deflection of steel structural members shall not exceed that permitted by AISC 360, AISI-NAS, AISI-General, AISI-Truss, ASCE 3, ASCE 8, SJI JG-1.1, SJI K-1.1 or SJI LH/DLH-1.1, as applicable.

1604*A*.3.4 Masonry. The deflection of masonry structural members shall not exceed that permitted by ACI 530/ASCE 5/TMS 402.

1604*A*.3.5 Aluminum. The deflection of aluminum structural members shall not exceed that permitted by AA ADM1.

1604*A*.3.6 Limits. Deflection of structural members over span, *l*, shall not exceed that permitted by Table 1604*A*.3.

1604A.3.7 *(Relocated from 1613A.2, 2001 CBC)* ***Lateral Load Deflections****.*

1604A.3.7.1 *(Relocated from 1613A.2.1, 2001 CBC)* ***General.*** *The deflection of structural systems designed to resist wind or seismic loads shall be such that other portions of the structure are not overstressed.*

NOTE: *See ~~Section 1633A.2.4~~ ASCE 7 Section 12.12.4.*

1604A.3.7.2 *(Relocated from 1613A.2.3, 2001 CBC)* ***Horizontal diaphragms.*** *The maximum span-width ratio for any roof or floor diaphragm shall not exceed those given in Table ~~16A-V~~ 2305.2.3 or ICC-ES AC 43 unless test data and design calculations acceptable to the enforcement agency are submitted and approved for the use of other span-width ratios. Concrete diaphragm shall not exceed span-width ratios for equivalent composite floor diaphragm in ICC-ES AC 43.*

1604A.3.8 *(Relocated from 1613A.1, 2001 CBC)* ***Deflections.*** *Deflection criteria for materials not specified shall be developed by the project architect or structural engineer in a manner consistent with the provisions of this section and approved by the enforcement agency.*

1604*A*.4 Analysis. Load effects on structural members and their connections shall be determined by methods of structural analysis that take into account equilibrium, general stability, geometric compatibility and both short- and long-term material properties.

Members that tend to accumulate residual deformations under repeated service loads shall have included in their analysis the added eccentricities expected to occur during their service life.

Any system or method of construction to be used shall be based on a rational analysis in accordance with well-established principles of mechanics. Such analysis shall result in a system that provides a complete load path capable of transferring loads from their point of origin to the load-resisting elements.

The total lateral force shall be distributed to the various vertical elements of the lateral-force-resisting system in proportion to their rigidities, considering the rigidity of the horizontal bracing system or diaphragm. Rigid elements assumed not to be a part of the lateral-force-resisting system are permitted to be incorporated into buildings provided their effect on the action of the system is considered and provided for in the design. Except where diaphragms are flexible, or are permitted to be analyzed as flexible, provisions shall be made for the increased forces induced on resisting elements of the structural system resulting from torsion due to eccentricity between the center of application of the lateral forces and the center of rigidity of the lateral-force-resisting system.

Every structure shall be designed to resist the overturning effects caused by the lateral forces specified in this chapter. See Section 1609*A* for wind loads, Section 1610*A* for lateral soil loads and Section 1613*A* for earthquake loads.

1604*A*.5 Occupancy category. Buildings shall be assigned an occupancy category in accordance with Table 1604*A*.5.

TABLE 1604*A*.5 - OCCUPANCY CATEGORY OF BUILDINGS AND OTHER STRUCTURES

OCCUPANCY CATEGORY	NATURE OF OCCUPANCY
I	Buildings and other structures that represent a low hazard to human life in the event of failure, including but not limited to: • Agricultural facilities. • Certain temporary facilities. • Minor storage facilities.
II	Buildings and other structures except those listed in Occupancy Categories I, III and IV
III	Buildings and other structures that represent a substantial hazard to human life in the event of failure, including but not limited to: • Covered structures whose primary occupancy is public assembly with an occupant load greater than 300. • Buildings and other structures with elementary school, secondary school or day care facilities with an occupant load greater than 250. • Buildings and other structures with an occupant load greater than 500 for colleges or adult education facilities.

	• ***[For OSHPD 1 & 4]*** *Not permitted by OSHPD*. ~~Health care facilities with an occupant load of 50 or more resident patients, but not having surgery or emergency treatment facilities.~~ • Jails and detention facilities. • Any other occupancy with an occupant load greater than 5,000. • Power-generating stations, water treatment for potable water, waste water treatment facilities and other public utility facilities not included in Occupancy Category IV. • Buildings and other structures not included in Occupancy Category IV containing sufficient quantities of toxic or explosive substances to be dangerous to the public if released.
IV	Buildings and other structures designated as essential facilities, including but not limited to: • ***[For OSHPD 1 & 4]*** *(Relocated from Table 16A-K, 2001 CBC)* Hospitals and other health care facilities *as defined in Section 1250, Health and Safety Code.* ~~having surgery or emergency treatment facilities~~. *Hospital Buildings as defined in C.C.R. Title 24, Part 1, Section 7-111 and all structures required for their continuous operation and access.* • Fire, rescue and police stations and emergency vehicle garages. • Designated earthquake, hurricane or other emergency shelters. • Designated emergency preparedness, communication, and operation centers and other facilities required for emergency response ***[For DSA-SS]*** *as defined in C.C.R. Title 24, Part 1, Section 4-111 and all structures required for their continuous operation and access.* • Power-generating stations and other public utility facilities required as emergency backup facilities for Occupancy Category IV structures. • Structures containing highly toxic materials as defined by Section 307 where the quantity of the material exceeds the maximum allowable quantities of Table 307.1.(2). • Aviation control towers, air traffic control centers and emergency aircraft hangars. • Buildings and other structures having critical national defense functions. • Water treatment facilities required to maintain water pressure for fire suppression.

1604*A*.5.1 Multiple occupancies. Where a structure is occupied by two or more occupancies not included in the same occupancy category, the structure shall be assigned the classification of the highest occupancy category corresponding to the various occupancies. Where structures have two or more portions that are structurally separated, each portion shall be separately classified. Where a separated portion of a structure provides required access to, required egress from or shares life safety components with another portion having a higher occupancy category, both portions shall be assigned to the higher occupancy category.

1604*A*.6 In-situ load tests. The building official is authorized to require an engineering analysis or a load test, or both, of any construction whenever there is reason to question the safety of the construction for the intended occupancy. Engineering analysis and load tests shall be conducted in accordance with Section 1713*A*.

1604*A*.7 Preconstruction load tests. Materials and methods of construction that are not capable of being designed by approved engineering analysis or that do not comply with the applicable material design standards listed in Chapter 35, or alternative test procedures in accordance with Section 1711*A*, shall be load tested in accordance with Section 1714*A*.

1604*A*.8 Anchorage.

1604*A*.8.1 General. Anchorage of the roof to walls and columns, and of walls and columns to foundations, shall be provided to resist the uplift and sliding forces that result from the application of the prescribed loads.

1604A.8.2 Concrete and masonry walls. Concrete and masonry walls shall be anchored to floors, roofs and other structural elements that provide lateral support for the wall. Such anchorage shall provide a positive direct connection capable of resisting the horizontal forces specified in this chapter but not less than a minimum strength design horizontal force of 280 plf (4.10 kN/m) of wall, substituted for "*E*" in the load combinations of Section 1605A.2 or 1605A.3. Walls shall be designed to resist bending between anchors where the anchor spacing exceeds 4 feet (1219 mm). Required anchors in masonry walls of hollow units or cavity walls shall be embedded in a reinforced grouted structural element of the wall. See Sections 1609A for wind design requirements and see Section 1613A for earthquake design requirements.

1604A.8.3 Decks. Where supported by attachment to an exterior wall, decks shall be positively anchored to the primary structure and designed for both vertical and lateral loads as applicable. Such attachment shall not be accomplished by the use of toenails or nails subject to withdrawal. Where positive connection to the primary building structure cannot be verified during inspection, decks shall be self-supporting. For decks with cantilevered framing members, connections to exterior walls or other framing members shall be designed and constructed to resist uplift resulting from the full live load specified in Table 1607A.1 acting on the cantilevered portion of the deck.

1604A.9 Counteracting structural actions. Structural members, systems, components and cladding shall be designed to resist forces due to earthquake and wind, with consideration of overturning, sliding, and uplift. Continuous load paths shall be provided for transmitting these forces to the foundation. Where sliding is used to isolate the elements, the effects of friction between sliding elements shall be included as a force.

1604A.10 Wind and seismic detailing. Lateral-force-resisting systems shall meet seismic detailing requirements and limitations prescribed in this code and ASCE 7, excluding Chapter 14 and Appendix 11A, even when wind code prescribed load effects are greater than seismic load effects.

1604A.11 *(Relocated from 1605A.5, 2001 CBC)* ***Construction Procedures.*** *Where unusual erection or construction procedures are considered essential by the project-structural engineer or architect in order to accomplish the intent of the design or influence the design, such procedure shall be indicated on the plans or in the specifications ~~and shall have the prior approval of the enforcement agency~~.*

SECTION 1605A - LOAD COMBINATIONS

1605A.1 General. Buildings and other structures and portions thereof shall be designed to resist the load combinations specified in Section 1605A.2 or 1605A.3 and Chapters 18A through 23, and the special seismic load combinations of Section 1605A.4 where required by Section 12.3.3.3 or 12.10.2.1 of ASCE 7. Applicable loads shall be considered, including both earthquake and wind, in accordance with the specified load combinations. Each load combination shall also be investigated with one or more of the variable loads set to zero.

1605A.2 Load combinations using strength design or load and resistance factor design.

1605A.2.1 Basic load combinations. Where strength design or load and resistance factor design is used, structures and portions thereof shall resist the most critical effects from the following combinations of factored loads:

$1.4\ (D + F)$
(Equation 16A-1)

$1.2(D + F + T) + 1.6(L + H) + 0.5\ (L_r \text{ or } S \text{ or } R)$
(Equation 16A-2)

$1.2D + 1.6(L_r \text{or } S \text{ or } R) + (f_1 L \text{or } 0.8W)$
(Equation 16A-3)

$1.2D + 1.6W + f_1 L + 0.5(L_r \text{ or } S \text{or } R)$
(Equation 16A-4)

$1.2D + 1.0E + f_1 L + f_2 S$
(Equation 16A-5)

$0.9D + 1.6W + 1.6H$
(Equation 16A-6)

$0.9D + 1.0E + 1.6H$
(Equation 16A-7)

f_1 = 1 for floors in places of public assembly, for live loads in excess of 100 pounds per square foot (4.79 kN/m^2), and for parking garage live load, and

= 0.5 for other live loads.

f_2 = 0.7 for roof configurations (such as saw tooth) that do not shed snow off the structure, and

= 0.2 for other roof configurations.

Exception: Where other factored load combinations are specifically required by the provisions of this code, such combinations shall take precedence.

1605A.2.1.1 [For DSA-SS] Determination of f_2. *The value of f_2 shall conform with the requirements adopted by the city, county, or city and county in which the project is located, if more restrictive than prescribed in Section 1605A.2.1.*

1605A.2.2 Other loads. Where F_a is to be considered in the design, the load combinations of Section 2.3.3 of ASCE 7 shall be used.

1605A.3 Load combinations using allowable stress design.

1605A.3.1 Basic load combinations. Where allowable stress design (working stress design), as permitted by this code, is used, structures and portions thereof shall resist the most critical effects resulting from the following combinations of loads:

$D + F$
(Equation 16A-8)

$D + H + F + L + T$
(Equation 16A-9)

$D + H + F + (L_r$ or S or $R)$
(Equation 16A-10)

$D + H + F + 0.75(L + T) + 0.75\ (L_r$ or S or $R)$
(Equation 16A-11)

$D + H + F + (W$ or $0.7E)$
(Equation 16A-12)

$D + H + F + 0.75(W$ or $0.7E) + 0.75L + 0.75\ (L_r$ or S or $R)$
(Equation 16A-13)

$0.6D + W + H$
(Equation 16A-14)

$0.6D + 0.7E + H$
(Equation 16A-15)

Exceptions:

1. Crane hook loads need not be combined with roof live load or with more than three-fourths of the snow load or one-half of the wind load.

2. Flat roof snow loads of 30 psf (1.44 kN/m^2) or less need not be combined with seismic loads. Where flat roof snow loads exceed 30 psf (1.44 kN/m^2), 20 percent shall be combined with seismic loads.

1605A.3.1.1 Stress increases. Increases in allowable stresses specified in the appropriate material chapter or the referenced standards shall not be used with the load combinations of Section 1605A.3.1, except that a duration of load increase shall be permitted in accordance with Chapter 23.

1605A.3.1.2 Other loads. Where F_a is to be considered in design, the load combinations of Section 2.4.2 of ASCE 7 shall be used.

1605A.3.2 Alternative basic load combinations. In lieu of the basic load combinations specified in Section 1605A.3.1, structures and portions thereof shall be permitted to be designed for the most critical effects resulting from the following combinations. When using these alternative basic load combinations that include wind or seismic loads, allowable stresses are permitted to be increased or load combinations reduced where permitted by the material chapter of this code or the referenced standards.

(Relocated from 1632A.1, 2001 CBC) Intermittent connections such as inserts for anchorage of nonstructural components shall not be allowed the one-third increase in allowable stresses.

For load combinations that include the counteracting effects of dead and wind loads, only two-thirds of the minimum dead load likely to be in place during a design wind event shall be used. Where wind loads are calculated in accordance with Chapter 6 of ASCE 7, the coefficient ω in the following equations shall be taken as 1.3. For other wind loads, ω shall be taken as 1. When using these alternative load combinations to evaluate sliding, overturning and soil bearing at the soil-structure interface, the reduction of foundation overturning from Section 12.13.4 in ASCE 7 shall not be used. When using these alternative basic load combinations for proportioning foundations for loadings, which include seismic loads, the vertical seismic load effect, E_v, in Equation 12.4-4 of ASCE 7 is permitted to be taken equal to zero.

$D + L + (L_r \text{ or } S \text{ or } R)$
(Equation 16A-16)

$D + L + (\omega W)$
(Equation 16A-17)

$D + L + \omega W + S/2$
(Equation 16A-18)

$D + L + S + \omega W/2$
(Equation 1 A-19)

$D + L + S + E/1.4$
(Equation 16A-20)

$0.9D + E/1.4$
(Equation 16A-21)

Exceptions:

1. Crane hook loads need not be combined with roof live loads or with more than three-fourths of the snow load or one-half of the wind load.

2. Flat roof snow loads of 30 psf (1.44 kN/m^2) or less need not be combined with seismic loads. Where flat roof snow loads exceed 30 psf (1.44 kN/m^2), 20 percent shall be combined with seismic loads.

1605A.3.2.1 Other loads. Where F, H or T are to be considered in the design, each applicable load shall be added to the combinations specified in Section 1605A.3.2.

1605A.4 Special seismic load combinations. For both allowable stress design and strength design methods where specifically required by Section 1605A.1 or by Chapters 18A through 23, elements and components shall be designed to resist the forces calculated using Equation 16A-22 when the effects of the seismic ground motion are additive to gravity forces and those calculated using Equation 16A-23 when the effects of the seismic ground motion counteract gravity forces.

$1.2D + f_1L + E_m$
(Equation 16A-22)

$0.9D + E_m$
(Equation 16A-23)

where:

E_m = The maximum effect of horizontal and vertical forces as set forth in Section 12.4.3 of ASCE 7.

f_1 = 1 for floors in places of public assembly, for live loads in excess of 100 psf (4.79 kN/m^2) and for parking garage live load, or

= 0.5 for other live loads.

1605A.5 Heliports and helistops. Heliport and helistop landing areas shall be designed for the following loads, combined in accordance with Section 1605A:

1. Dead load, D, plus the gross weight of the helicopter, D_h, plus snow load, S.

2. Dead load, D, plus two single concentrated impact loads, L, approximately 8 feet (2438 mm) apart applied anywhere on the landing area (representing the helicopter's two main landing gear, whether skid type or wheeled type), having a magnitude of 0.75 times the gross weight of the helicopter. Both loads acting together total one-and one half times the gross weight of the helicopter.

3. Dead load, D, plus a uniform live load, L, of 100 psf (4.79 kN/m^2).

Exception: *Not permitted by OSHPD and DSA-SS*. ~~Landing areas designed for helicopters with gross weights not exceeding 3,000 pounds (13.34 kN) in accordance with Items 1 and 2 shall be permitted to be designed using a 40 psf (1.92 kN/m^2) uniform live load in Item 3, provided the landing area is identified with a 3,000 pound (13.34 kN) weight limitation. This 40 psf (1.92 kN/m^2) uniform live load shall not be reduced. The landing area weight limitation shall be indicated by the numeral "3" (kips) located in the bottom right corner of the landing area as viewed from the primary approach path. The landing area weight limitation shall be a minimum of 5 feet (1524 mm) in height.~~

SECTION 1606A - DEAD LOADS

1606A.1 General. Dead loads are those loads defined in Section 1602A.1. Dead loads shall be considered permanent loads.

1606A.2 Design dead load. For purposes of design, the actual weights of materials of construction and fixed service equipment shall be used. In the absence of definite information, values used shall be subject to the approval of the building official.

1606A.3 *(Relocated from 1607A.4.1, 2001 CBC)* ***Roof Dead Loads.*** *The design dead load shall provide for the weight of at least one ~~reroofing~~ additional roof covering in addition to other applicable loadings if the new ~~roofing~~ roof covering ~~can~~ is permitted to be applied over the original roofing without its removal, in accordance with Section 1510.*

SECTION 1607A - LIVE LOADS

1607A.1 General. Live loads are those loads defined in Section 1602A.1.

TABLE 1607A.1 - MINIMUM UNIFORMLY DISTRIBUTED LIVE LOADS AND MINIMUM CONCENTRATED LIVE LOADS[g]

OCCUPANCY OR USE	UNIFORM (psf)	CONCENTRATED (lbs.)
1. Apartments (see residential)	—	—
2. Access floor systems		

Office use Computer use	50 100	2,000 2,000
3. Armories and drill rooms	150	—
4. Assembly areas and theaters *n,p* Fixed seats (fastened to floor) Follow spot, projections and control rooms Lobbies Movable seats Stages and platforms	 60 50 100 100 125	—
5. Balconies On one- and two-family residences only, and not exceeding 100 sq ft	100 60	—
6. Bowling Alleys	75	—
7. Catwalks	40	300
8. Dance Halls and ballrooms	100	—
9. Decks	Same as occupancy served[h]	—
10. Dining rooms and restaurants	100	—
11. Dwellings (see residential)	—	—
12. Cornices	60	—
13. Corridors, except as otherwise indicated	100	—
14. Elevator machine room grating (on area of 4 in2)	—	300
15. Finish light floor plate construction (on area of 1 in2)	— —	200
16. Fire escapes On single-family dwellings only	100 40	—
17. Garages (passenger vehicles only) Trucks and buses	40 See Section 1607*A*.6	Note a
18. Grandstands (see stadium and arena bleachers)	—	—
19. Gymnasiums *p*, main floors and balconies	100	—
20.Handrails, guards and grab bars	See Section 1607*A*.7	
21.Hospitals *(Relocated from Table 16A-A, 2001 CBC)* ***[OSHPD 1 & 4]*** Corridors above first floor Operating rooms, laboratories Patient rooms *Mechanical and electrical equipment areas including open areas around equipment* *Storage:* *Light* *Heavy* *Dinning Area (Not used for assembly)* *Kitchen and serving areas*	 ~~80~~ *100* 60 40 *50* *125* *250* *100* *50*	 1,000 1,000 1,000 — — — *1000* *1000*
22.Hotels (see residential)	—	—

OCCUPANCY OR USE	UNIFORM (psf)	CONCENTRATED (lbs.)
23. Libraries[m]		
Corridors above first floor	80	1,000
Reading rooms	60	1,000
Stack rooms	150[b]	1,000
24. Manufacturing		
Heavy	250	3,000
Light	125	2,000
25. Marquees	75	—
26. Office buildings [m]		
Corridors above first floor	80	2,000
File and computer rooms shall be designed for heavier loads based on anticipated occupancy	—	—
	100	
Lobbies and first-floor corridors	50	2,000
Offices		2,000
27. Penal institutions		
Cell blocks	40	—
Corridors	100	
28. Residential		
One- and two-family dwellings		
Uninhabitable attics without storagei	10	
Uninhabitable attics with limited storage[i, j, k]	20	
Habitable attics and sleeping areas	30	
All other areas except balconies and decks	40	—
Hotels and multiple-family dwellings		
Private rooms and corridors serving them	40	
Public rooms and corridors serving them	100	
29. Reviewing stands, grandstands and bleachers [p]	Note c	
30. Roofs		
All roof surfaces subject to maintenance workers		300
Awnings and canopies		
Fabric construction supported by a lightweight rigid skeleton structure	5 nonreduceable	
All other construction	20	
Ordinary flat, pitched, and curved roofs	20	
Primary roof members, exposed to a work floor		
Single panel point of lower chord of roof trusses or any point along primary structural members supporting roofs:		
Over manufacturing, storage warehouses, and repair garages		2,000
All other occupancies		300

Roofs used for other special purposes	Note 1	Note 1
Roofs used for promenade purposes	60	
Roofs used for roof gardens or assembly purposes	100	

(continued)

TABLE 1607A.1—continued MINIMUM UNIFORMLY DISTRIBUTED LIVE LOADS AND MINIMUM CONCENTRATED LIVE LOADS[g]

OCCUPANCY OR USE	UNIFORM (psf)	CONCENTRATED (lbs.)
31. Schools [m]		
Classrooms	40 [o]	1,000
Corridors above first floor	80	1,000
First-floor corridors	100	1,000
32. Scuttles, skylight ribs and accessible ceilings	—	200
33. Sidewalks, vehicular driveways and yards, subject to trucking	250[d]	8,000[e]
34. Skating rinks	100	—
35. Stadiums and arenas		
Bleachers [p]	100[c]	—
Fixed seats (fastened to floor)	60[c]	
36. Stairs and exits		Note f
One- and two-family dwellings	40	
All other	100	
37. Storage warehouses (shall be designed for heavier loads if required for anticipated storage)		
Heavy	250	
Light	125	
38. Stores		
Retail		
First floor	100	1,000
Upper floors	75	1,000
Wholesale, all floors	125	1,000
39. Vehicle barriers	See Section 1607A.7.7.3	
40. Walkways and elevated platforms (other than exitways)	60	—
41. Yards and terraces, pedestrians [q]	100	—
42. (Relocated from Table 16A-B, 2001 CBC) Storage racks and wall-hung cabinets.	*Total Loads*[m]	

For SI: 1 inch = 25.4 mm, 1 square inch = 645.16 mm^2
1 square foot = 0.0929 m^2,
1 pound per square foot = 0.0479 kN/m^2, 1 pound = 0.004448 kN,
1 pound per cubic foot = 16 kg/m^3

a. Floors in garages or portions of buildings used for the storage of motor vehicles shall be designed for the uniformly distributed live loads of Table 1607A.1 or the following concentrated loads: (1) for garages restricted to vehicles accommodating not more than nine passengers, 3,000 pounds acting on an area of 4.5 inches by 4.5 inches; (2) for mechanical parking structures without slab or deck which are used for storing passenger vehicles only, 2,250 pounds per wheel.

b. The loading applies to stack room floors that support nonmobile, double-faced library bookstacks, subject to the following limitations:

1. The nominal bookstack unit height shall not exceed 90 inches;

2. The nominal shelf depth shall not exceed 12 inches for each face; and

3. Parallel rows of double-faced bookstacks shall be separated by aisles not less than 36 inches wide.

c. Design in accordance with the ICC *Standard on Bleachers, Folding and Telescopic Seating and Grandstands*.

d. Other uniform loads in accordance with an approved method which contains provisions for truck loadings shall also be considered where appropriate.

e. The concentrated wheel load shall be applied on an area of 20 square inches.

f. Minimum concentrated load on stair treads (on area of 4 square inches) is 300 pounds.

g. Where snow loads occur that are in excess of the design conditions, the structure shall be designed to support the loads due to the increased loads caused by drift buildup or a greater snow design determined by the building official (see Section 1608*A*). For special-purpose roofs, see Section 1607*A*.11.2.2.

h. See Section 1604*A*.8.3 for decks attached to exterior walls.

i. Attics without storage are those where the maximum clear height between the joist and rafter is less than 42 inches, or where there are not two or more adjacent trusses with the same web configuration capable of containing a rectangle 42 inches high by 2 feet wide, or greater, located within the plane of the truss. For attics without storage, this live load need not be assumed to act concurrently with any other live load requirements.

j. For attics with limited storage and constructed with trusses, this live load need only be applied to those portions of the bottom chord where there are two or more adjacent trusses with the same web configuration capable of containing a rectangle 42 inches high by 2 feet wide or greater, located within the plane of the truss. The rectangle shall fit between the top of the bottom chord and the bottom of any other truss member, provided that each of the following criteria is met:

i. The attic area is accessible by a pull-down stairway or framed opening in accordance with Section 1209.2, and

ii. The truss shall have a bottom chord pitch less than 2:12.

iii. Bottom chords of trusses shall be designed for the greater of actual imposed dead load or 10 psf, uniformly distributed over the entire span.

k. Attic spaces served by a fixed stair shall be designed to support the minimum live load specified for habitable attics and sleeping rooms.

l. Roofs used for other special purposes shall be designed for appropriate loads as approved by the building official.

m. (Relocated from Table 16A-B, 2001 CBC) The minimum vertical design live load shall be as follows:

Paper media:

12-inch-deep (305 mm) shelf 33 pounds per lineal foot (482 N/m)
15-inch-deep (381 mm) shelf 41 pounds per lineal foot (598 N/m), or
33 pounds per cubic foot (5183 N/m3) per total volume of the rack or cabinet, whichever is less.

Film media:

18-inch-deep (457 mm) shelf 100 pounds per lineal foot (1459 N/m), or
50 pounds per cubic foot (7853 N/m3) per total volume of the rack or cabinet, whichever is less.

Other media:

20 pounds per cubic foot (311 N/m3) or 20 pounds per square foot (958 Pa), whichever is less, but not less than actual loads.

n. (Relocated from Table 16A-B, 2001 CBC) ***[For DSA-SS]*** *The following minimum loads for stage accessories apply:*

1. Gridirons and fly galleries: 75 pounds per square foot uniform live load.

2. Loft block wells: 250 pounds per lineal foot vertical load and lateral load.

3. Head block wells and sheave beams: 250 pounds per lineal foot vertical load and lateral load. ~~All loads are in pounds per lineal foot.~~ Head block wells and sheave beams shall be designed for all tributary loft block well loads. Sheave blocks shall be designed with a safety factor of five.

4. Scenery beams where there is no gridiron: 300 pounds per lineal foot vertical load and lateral load.

5. Ceiling framing over stages shall be designed for a uniform live load of 20 pounds per square foot. ~~Ceiling framing or roof framing above stages shall be designed for a uniform load of 20 pounds per square foot (0.96 kN/m2) in addition to other dead and live loads.~~ For members supporting a tributary area of 200 square feet or more, this additional load may be reduced to 15 pounds per square foot (0.72 kN/m2).

o. (Relocated from Table 16A-A, 2001 CBC) ***[For DSA-SS]*** *The minimum uniform live load for classroom occupancies is 50 psf.*

p. (Relocated from Table 16A-A, 2001 CBC) ***[For DSA-SS]*** *The minimum uniform live load for a press box floor or accessible roof with railing is 100 psf.*

q. (Relocated from Table 16A-A, 2001 CBC) ***[For DSA-SS]*** *Item 41 applies to pedestrian bridges and walkways that are not subjected to uncontrolled vehicle access.*

1607*A*.2 Loads not specified. For occupancies or uses not designated in Table 1607*A*.1, the live load shall be determined in accordance with a method approved by the building official.

1607*A*.3 Uniform live loads. The live loads used in the design of buildings and other structures shall be the maximum loads expected by the intended use or occupancy but shall in no case be less than the minimum uniformly distributed unit loads required by Table 1607*A*.1.

1607*A*.4 Concentrated loads. Floors and other similar surfaces shall be designed to support the uniformly distributed live loads prescribed in Section 1607*A*.3 or the concentrated load, in pounds (kilonewtons), given in Table 1607*A*.1, whichever produces the greater load effects. Unless otherwise specified, the indicated concentration shall be assumed to be uniformly distributed over an area 2.5 feet by 2.5 feet [6.25 square feet (0.58 m^2)] and shall be located so as to produce the maximum load effects in the structural members.

1607*A*.5 Partition loads. In office buildings and in other buildings where partition locations are subject to change, provisions for partition weight shall be made, whether or not partitions are shown on the construction documents, unless the specified live load exceeds 80 psf (3.83 kN/m^2). The partition load shall not be less than a uniformly distributed live load of 15 psf (0.74 kN/m^2).

1607*A*.6 Truck and bus garages. Minimum live loads for garages having trucks or buses shall be as specified in Table 1607*A*.6, but shall not be less than 50 psf (2.40 kN/m^2), unless other loads are specifically justified and approved by the building official. Actual loads shall be used where they are greater than the loads specified in the table.

TABLE 1607*A*.6 - UNIFORM AND CONCENTRATED LOADS

LOADING CLASS[a]	UNIFORM LOAD (pounds/linear foot of lane)	CONCENTRATED LOAD (pounds)[b]	
		For moment design	For shear design
H20-44 and HS20-44	640	18,000	26,000
H15-44 and HS15-44	480	13,500	19,500

For SI: 1 pound per linear foot = 0.01459 kN/m, 1 pound = 0.004448 kN,
1 ton = 8.90 kN.

a. An H loading class designates a two-axle truck with a semitrailer. An HS loading class designates a tractor truck with a semitrailer. The numbers following the letter classification indicate the gross weight in tons of the standard truck and the year the loadings were instituted.

b. See Section 1607A.6.1 for the loading of multiple spans.

1607A.6.1 Truck and bus garage live load application. The concentrated load and uniform load shall be uniformly distributed over a 10-foot (3048 mm) width on a line normal to the centerline of the lane placed within a 12-foot-wide (3658 mm) lane. The loads shall be placed within their individual lanes so as to produce the maximum stress in each structural member. Single spans shall be designed for the uniform load in Table 1607A.6 and one simultaneous concentrated load positioned to produce the maximum effect. Multiple spans shall be designed for the uniform load in Table 1607A.6 on the spans and two simultaneous concentrated loads in two spans positioned to produce the maximum negative moment effect. Multiple span design loads, for other effects, shall be the same as for single spans.

1607A.7 Loads on handrails, guards, grab bars and vehicle barriers. Handrails, guards, grab bars as designed in ICC A117.1 and vehicle barriers shall be designed and constructed to the structural loading conditions set forth in this section.

1607A.7.1 Handrails and guards. Handrail assemblies and guards shall be designed to resist a load of 50 plf (0.73 kN/m) applied in any direction at the top and to transfer this load through the supports to the structure. Glass handrail assemblies and guards shall also comply with Section 2407.

Exceptions:

1. For one- and two-family dwellings, only the single concentrated load required by Section 1607A.7.1.1 shall be applied.
2. In Group I-3, F, H and S occupancies, for areas that are not accessible to the general public and that have an occupant load less than 50, the minimum load shall be 20 pounds per foot (0.29 kN/m).

1607A.7.1.1 Concentrated load. Handrail assemblies and guards shall be able to resist a single concentrated load of 200 pounds (0.89 kN), applied in any direction at any point along the top, and have attachment devices and supporting structure to transfer this loading to appropriate structural elements of the building. This load need not be assumed to act concurrently with the loads specified in the preceding paragraph.

1607A.7.1.2 Components. Intermediate rails (all those except the handrail), balusters and panel fillers shall be designed to withstand a horizontally applied normal load of 50 pounds (0.22 kN) on an area equal to 1 square foot ($0.093m^2$), including openings and space between rails. Reactions due to this loading are not required to be superimposed with those of Section 1607A.7.1 or 1607A.7.1.1.

1607A.7.1.3 Stress increase. Where handrails and guards are designed in accordance with the provisions for allowable stress design (working stress design) exclusively for the loads specified in Section 1607A.7.1, the allowable stress for the members and their attachments are permitted to be increased by one-third.

1607A.7.2 Grab bars, shower seats and dressing room bench seats. Grab bars, shower seats and dressing room bench seat systems shall be designed to resist a single concentrated load of 250 pounds (1.11 kN) applied in any direction at any point.

1607A.7.3 Vehicle barriers. Vehicle barrier systems for passenger cars shall be designed to resist a single load of 6,000 pounds (26.70 kN) applied horizontally in any direction to the barrier system and shall have anchorage or attachment capable of transmitting this load to the structure. For design of the system, the load shall be assumed to act at a minimum height of 1 foot, 6 inches (457 mm) above the floor or ramp surface on an area not to exceed 1 square foot ($305\ mm^2$), and is not required to be assumed to act concurrently with any handrail or guard loadings specified in the preceding paragraphs of Section 1607A.7.1. Garages accommodating trucks and buses shall be designed in accordance with an approved method that contains provision for traffic railings.

1607A.8 Impact loads. The live loads specified in Section 1607A.3 include allowance for impact conditions. Provisions shall be made in the structural design for uses and loads that involve unusual vibration and impact forces.

1607A.8.1 Elevators. Elevator loads shall be increased by 100 percent for impact and the structural supports shall be designed within the limits of deflection prescribed by ASME A17.1.

1607A.8.2 Machinery. For the purpose of design, the weight of machinery and moving loads shall be increased as follows to allow for impact: (1) elevator machinery, 100 percent; (2) light machinery, shaft- or motor-driven, 20 percent; (3) reciprocating machinery or power-driven units, 50 percent; (4) hangers for floors or balconies, 33 percent. Percentages shall be increased where specified by the manufacturer.

1607A.9 Reduction in live loads. Except for roof uniform live loads, all other minimum uniformly distributed live loads, L_o, in Table 1607A.1 are permitted to be reduced in accordance with Section 1607A.9.1 or 1607A.9.2.

1607A.9.1 General. Subject to the limitations of Sections 1607A.9.1.1 through 1607A.9.1.4, members for which a value of $K_{LL}A_T$ is 400 square feet (37.16 m^2) or more are permitted to be designed for a reduced live load in accordance with the following equation:

$$L = L_o\left(0.25 + \frac{15}{\sqrt{K_{LL}A_T}}\right)$$

(Equation 16A-24)

For SI:

$$L = L_o\left(0.25 + \frac{4.57}{\sqrt{K_{LL}A_T}}\right)$$

where:

L = Reduced design live load per square foot (meter) of area supported by the member.

L_o = Unreduced design live load per square foot (meter) of area supported by the member (see Table 1607A.1).

K_{LL} = Live load element factor (see Table 1607A.9.1).

A_T = Tributary area, in square feet (square meters). L shall not be less than $0.50L_o$ for members supporting one floor and L shall not be less than $0.40L_o$ for members supporting two or more floors.

TABLE 1607A.9.1 LIVE LOAD ELEMENT FACTOR, K_{LL}

ELEMENT	K_{LL}
Interior columns	4
Exterior columns without cantilever slabs	4
Edge columns with cantilever slabs	3
Corner columns with cantilever slabs	2
Edge beams without cantilever slabs	2
Interior beams	2
All other members not identified above including: Edge beams with cantilever slabs Cantilever beams Two-way slabs	1

Members without provisions for continuous shear transfer normal to their span	

1607A.9.1.1 Heavy live loads. Live loads that exceed 100 psf (4.79 kN/m^2) shall not be reduced.

Exceptions:

1. The live loads for members supporting two or more floors are permitted to be reduced by a maximum of 20 percent, but the live load shall not be less than *L*as calculated in Section 1607A.9.1.

2. For uses other than storage, where approved, additional live load reductions shall be permitted where shown by the registered design professional that a rational approach has been used and that such reductions are warranted.

1607A.9.1.2 Passenger vehicle garages. The live loads shall not be reduced in passenger vehicle garages except the live loads for members supporting two or more floors are permitted to be reduced by a maximum of 20 percent, but the live load shall not be less than *L* as calculated in Section 1607A.9.1.

1607A.9.1.3 Special occupancies. Live loads of 100 psf (4.79 kN/m^2) or less shall not be reduced in public assembly occupancies.

1607A.9.1.4 Special structural elements. Live loads shall not be reduced for one-way slabs except as permitted in Section 1607A.9.1.1. Live loads of 100 psf (4.79 kN/m^2) or less shall not be reduced for roof members except as specified in Section 1607A.11.2.

1607A.9.2 Alternate floor live load reduction. As an alternative to Section 1607A.9.1, floor live loads are permitted to be reduced in accordance with the following provisions. Such reductions shall apply to slab systems, beams, girders, columns, piers, walls and foundations.

1. A reduction shall not be permitted in Group A occupancies.

2. A reduction shall not be permitted where the live load exceeds 100 psf (4.79 kN/m^2) except that the design live load for members supporting two or more floors is permitted to be reduced by 20 percent.

3. A reduction shall not be permitted in passenger vehicle parking garages except the live loads for members supporting two or more floors are permitted to be reduced by a maximum of 20 percent.

4. For live loads not exceeding 100 psf (4.79 kN/m^2), the design live load for any structural member supporting 150 square feet (13.94 m^2) or more is permitted to be reduced in accordance with the following equation:

   $R = 0.08\ (A - 150)$
   (Equation 16A-25)

   For SI: $R = 0.861\ (A - 13.94)$

   Such reduction shall not exceed the smallest of:

   1. 40 percent for horizontal members,

   2. 60 percent for vertical members, or

   3. *R* as determined by the following equation.

   $R = 23.1\ (1 + D/L_o)$
   (Equation 16A-26)

   where:

   A = Area of floor supported by the member, square feet (m^2).

D = Dead load per square foot (m^2) of area supported.

L_o = Unreduced live load per square foot (m^2) of area supported.

R = Reduction in percent.

1607A.10 Distribution of floor loads. Where uniform floor live loads are involved in the design of structural members arranged so as to create continuity, the minimum applied loads shall be the full dead loads on all spans in combination with the floor live loads on spans selected to produce the greatest effect at each location under consideration. It shall be permitted to reduce floor live loads in accordance with Section 1607A.9.

1607A.11 Roof loads. The structural supports of roofs and marquees shall be designed to resist wind and, where applicable, snow and earthquake loads, in addition to the dead load of construction and the appropriate live loads as prescribed in this section, or as set forth in Table 1607A.1. The live loads acting on a sloping surface shall be assumed to act vertically on the horizontal projection of that surface.

1607A.11.1 Distribution of roof loads. Where uniform roof live loads are reduced to less than 20 psf (0.96 kN/m^2) in accordance with Section 1607A.11.2.1 and are involved in the design of structural members arranged so as to create continuity, the minimum applied loads shall be the full dead loads on all spans in combination with the roof live loads on adjacent spans or on alternate spans, whichever produces the greatest effect. See Section 1607A.11.2 for minimum roof live loads and Section 7.5 of ASCE 7 for partial snow loading.

1607A.11.2 Reduction in roof live loads. The minimum uniformly distributed roof live loads, L_o, in Table 1607A.1 are permitted to be reduced according to the following provisions.

1607A.11.2.1 Flat, pitched and curved roofs. Ordinary flat, pitched and curved roofs are permitted to be designed for a reduced roof live load as specified in the following equation or other controlling combinations of loads in Section 1605A, whichever produces the greater load. In structures where special scaffolding is used as a work surface for workers and materials during maintenance and repair operations, a lower roof load than specified in the following equation shall not be used unless approved by the building official. Greenhouses shall be designed for a minimum roof live load of 12 psf (0.58 kN/m^2).

$L_r = L_o R_1 R_2$
(Equation 16A-27)

where: $12 \leq L_r \leq 20$

For SI: $L_r = L_o R_1 R_2$

where: $0.58 \leq L_r \leq 0.96$

L_r = Reduced live load per square foot (m^2) of horizontal projection in pounds per square foot (kN/m^2).

The reduction factors R_1 and R_2 shall be determined as follows:

$R_1 = 1$ for $A_t \leq 200$ square feet (18.58 m^2)
(Equation 16A-28)

$R_1 = 1.2 - 0.001A_t$ for 200 square feet < A_t < 600 square feet
(Equation 16A-29)

For SI: $1.2 - 0.011A_t$ for 18.58 square meters < A_t < 55.74 square meters

$R_1 = 0.6$ for $A_t > 600$ square feet (55.74 m^2)
(Equation 16A-30)

where:

A_t = Tributary area (span length multiplied by effective width) in square feet (m^2) supported by any structural member, and

$R_2 = 1$ for $F \leq 4$
(Equation 16A-31)

$R_2 = 1.2 - 0.05\,F$ for $4 < F < 12$
(Equation 16A-32)

$R_2 = 0.6$ for $F > 12$
(Equation 16A-33)

where:

F = For a sloped roof, the number of inches of rise per foot (for SI: $F = 0.12 \times$ slope, with slope expressed as a percentage), or for an arch or dome, the rise-to-span ratio multiplied by 32.

1607A.11.2.2 Special-purpose roofs. Roofs used for promenade purposes, roof gardens, assembly purposes or other special purposes shall be designed for a minimum live load as required in Table 1607A.1. Such roof live loads are permitted to be reduced in accordance with 1607A.9. *(Relocated from 1607A.4.4, 2001 CBC) Uncovered open-frame roof structures shall be designed for a vertical live load of not less than 10 pounds per square foot (0.48 kN/m^2) of the total area encompassed by the framework.*

1607A.11.2.3 Landscaped roofs. Where roofs are to be landscaped, the uniform design live load in the landscaped area shall be 20 psf (0.958 kN/m^2). The weight of the landscaping materials shall be considered as dead load and shall be computed on the basis of saturation of the soil.

1607A.11.2.4 Awnings and canopies. Awnings and canopies shall be designed for uniform live loads as required in Table 1607A.1 as well as for snow loads and wind loads as specified in Sections 1608A and 1609A.

1607A.12 Crane loads. The crane live load shall be the rated capacity of the crane. Design loads for the runway beams, including connections and support brackets, of moving bridge cranes and monorail cranes shall include the maximum wheel loads of the crane and the vertical impact, lateral and longitudinal forces induced by the moving crane.

1607A.12.1 Maximum wheel load. The maximum wheel loads shall be the wheel loads produced by the weight of the bridge, as applicable, plus the sum of the rated capacity and the weight of the trolley with the trolley positioned on its runway at the location where the resulting load effect is maximum.

1607A.12.2 Vertical impact force. The maximum wheel loads of the crane shall be increased by the percentages shown below to determine the induced vertical impact or vibration force:

Monorail cranes (powered)	25 percent
Cab-operated or remotely operated bridge cranes (powered)	25 percent
Pendant-operated bridge cranes (powered)	10 percent
Bridge cranes or monorail cranes with hand-geared bridge, trolley and hoist	0 percent

1607A.12.3 Lateral force. The lateral force on crane runway beams with electrically powered trolleys shall be calculated as 20 percent of the sum of the rated capacity of the crane and the weight of the hoist and trolley. The lateral force shall be assumed to act horizontally at the traction surface of a runway beam, in either direction perpendicular to the beam, and shall be distributed according to the lateral stiffness of the runway beam and supporting structure.

1607A.12.4 Longitudinal force. The longitudinal force on crane runway beams, except for bridge cranes with hand-geared bridges, shall be calculated as 10 percent of the maximum wheel loads of the crane. The longitudinal force shall be assumed to act horizontally at the traction surface of a runway beam, in either direction parallel to the beam.

1607A.13 Interior walls and partitions. Interior walls and partitions that exceed 6 feet (1829 mm) in height, including their finish materials, shall have adequate strength to resist the loads to which they are subjected but not less than a horizontal load of 5 psf (0.240 kN/m^2). *(Relocated from 1611A.5, 2001 CBC) The 5 psf (0.24 kN/m^2) load need not be applied simultaneously with wind or seismic loads. The deflection of such walls under a load of 5 psf*

(0.24 kN/m^2) shall not exceed 1 / 240 of the span for walls with brittle finishes and 1 / 120 of the span for walls with flexible finishes.

Exception: Fabric partitions complying with Section 1607*A*.13.1 shall not be required to resist the minimum horizontal load of 5 psf (0.24 kN/m^2).

1607*A*.13.1 Fabric partitions. Fabric partitions that exceed 6 feet (1829 mm) in height, including their finish materials, shall have adequate strength to resist the following load conditions:

1. A horizontal distributed load of 5 psf (0.24 kN/m^2) applied to the partition framing. The total area used to determine the distributed load shall be the area of the fabric face between the framing members to which the fabric is attached. The total distributed load shall be uniformly applied to such framing members in proportion to the length of each member.

2. A concentrated load of 40 pounds (0.176 kN) applied to an 8-inch diameter (203 mm) area [50.3 square inches (32 452 mm^2)] of the fabric face at a height of 54 inches (1372 mm) above the floor.

SECTION 1608*A* SNOW LOADS

1608*A*.1 General. Design snow loads shall be determined in accordance with Chapter 7 of ASCE 7, but the design roof load shall not be less than that determined by Section 1607*A*.

1608*A*.2 Ground snow loads. The ground snow loads to be used in determining the design snow loads for roofs shall be determined in accordance with ASCE 7 or Figure 1608*A*.2 for the contiguous United States ~~and Table 1608.2 for Alaska~~. Site-specific case studies shall be made in areas designated "CS" in Figure 1608*A*.2. Ground snow loads for sites at elevations above the limits indicated in Figure 1608*A*.2 and for all sites within the CS areas shall be approved. Ground snow load determination for such sites shall be based on an extreme value statistical analysis of data available in the vicinity of the site using a value with a 2-percent annual probability of being exceeded (50-year mean recurrence interval). ~~Snow loads are zero for Hawaii, except in mountainous regions as approved by the building official.~~

1608A.3 [For DSA-SS] Determination of snow loads. *The ground snow load or the design snow load for roofs shall conform with the adopted ordinance of the city, county, or city and county in which the project site is located, and shall be approved by DSA.*

~~TABLE 1608.2 - GROUND SNOW LOADS, pg , FOR ALASKAN LOCATIONS~~

~~LOCATION~~	~~POUNDS PER SQUARE FOOT~~	~~LOCATION~~	~~POUNDS PER SQUARE FOOT~~	~~LOCATION~~	~~POUNDS PER SQUARE FOOT~~
~~Adak~~	~~30~~	~~Galena~~	~~60~~	~~Petersburg~~	~~150~~
~~Anchorage~~	~~50~~	~~Gulkana~~	~~70~~	~~St. Paul Islands~~	~~40~~
~~Angoon~~	~~70~~	~~Homer~~	~~40~~	~~Seward~~	~~50~~
~~Barrow~~	~~25~~	~~Juneau~~	~~60~~	~~Shemya~~	~~25~~
~~Barter Island~~	~~35~~	~~Kenai~~	~~70~~	~~Sitka~~	~~50~~
~~Bethel~~	~~40~~	~~Kodiak~~	~~30~~	~~Talkeetna~~	~~120~~
~~Big Delta~~	~~50~~	~~Kotzebue~~	~~60~~	~~Unalakleet~~	~~50~~
~~Cold Bay~~	~~25~~	~~McGrath~~	~~70~~	~~Valdez~~	~~160~~

~~Cordova~~	~~100~~	~~Nenana~~	~~80~~	~~Whittier~~	~~300~~
~~Fairbanks~~	~~60~~	~~Nome~~	~~70~~	~~Wrangell~~	~~60~~
~~Fort Yukon~~	~~60~~	~~Palmer~~	~~50~~	~~Yakutat~~	~~150~~

~~For SI: 1 pound per square foot = 0.0479 kN/m2.~~

(Figure 1608.A.2 is identical to 2006 IBC Figure 1608.2)

FIGURE 1608*A*.2 - GROUND SNOW LOADS, p_g, FOR THE UNITED STATES (psf)

(Figure 1608.A.2 is identical to 2006 IBC Figure 1608.2)

FIGURE 1608*A*.2 - continued - GROUND SNOW LOADS, p_g, FOR THE UNITED STATES (psf)

SECTION 1609*A* WIND LOADS

(Figure 1609A BASIC WIND SPEED (3-SECOND GUST) is identical to 2006 IBC Figure 1609 BASIC WIND SPEED (3-SECOND GUST))

FIGURE 1609*A* - BASIC WIND SPEED (3-SECOND GUST)

(Figure 1609A — continued - BASIC WIND SPEED (3-SECOND GUST) is identical to 2006 IBC Figure 1609—continued BASIC WIND SPEED (3-SECOND GUST))

FIGURE 1609*A* — continued - BASIC WIND SPEED (3-SECOND GUST)

(Figure 1609A -continued BASIC WIND SPEED (3-SECOND GUST) WESTERN GULF OF MEXICO HURRICANE COASTLINE is identical to 2006 IBC Figure 1609 -continued BASIC WIND SPEED (3-SECOND GUST) WESTERN GULF OF MEXICO HURRICANE COASTLINE)

FIGURE 1609*A* - continued - BASIC WIND SPEED (3-SECOND GUST) WESTERN GULF OF MEXICO HURRICANE COASTLINE

(Figure 1609A -continued BASIC WIND SPEED (3-SECOND GUST) EASTERN GULF OF MEXICO AND SOUTHEASTERN U.S. HURRICANE COASTLINE is identical to 2006 IBC Figure 1609 -continued BASIC WIND SPEED (3-SECOND GUST) EASTERN GULF OF MEXICO AND SOUTHEASTERN U.S. HURRICANE COASTLINE)

FIGURE 1609*A* - continued - BASIC WIND SPEED (3-SECOND GUST) EASTERN GULF OF MEXICO AND SOUTHEASTERN U.S. HURRICANE COASTLINE

(Figure 1609A -continued BASIC WIND SPEED (3-SECOND GUST) MID AND NORTHERN ATLANTIC HURRICANE COASTLINE is identical to 2006 IBC Figure 1609 -continued BASIC WIND SPEED (3-SECOND GUST) MID AND NORTHERN ATLANTIC HURRICANE COASTLINE)

FIGURE 1609*A* – continued - BASIC WIND SPEED (3-SECOND GUST) MID AND NORTHERN ATLANTIC HURRICANE COASTLINE

1609*A*.1 Applications. Buildings, structures and parts thereof shall be designed to withstand the minimum wind loads prescribed herein. Decreases in wind loads shall not be made for the effect of shielding by other structures.

1609*A*.1.1 Determination of wind loads. Wind loads on every building or structure shall be determined in accordance with Chapter 6 of ASCE 7. The type of opening protection required, the basic wind speed and the exposure category for a site is permitted to be determined in accordance with Section 1609*A* or ASCE 7. Wind shall be assumed to come from any horizontal direction and wind pressures shall be assumed to act normal to the surface considered.

Exceptions:

1. Subject to the limitations of Section 1609*A*.1.1.1, the provisions of SBCCI SSTD 10 shall be permitted for applicable Group R-2 and R-3 buildings.

2. Subject to the limitations of Section 1609*A*.1.1.1, residential structures using the provisions of the AF&PA WFCM.

3. Designs using NAAMM FP 1001.

4. Designs using TIA/EIA-222 for antenna-supporting structures and antennas.

1609*A*.1.1.1 Applicability. The provisions of SSTD 10 are applicable only to buildings located within Exposure B or C as defined in Section 1609*A*.4. The provisions of SBCCI SSTD 10 and the AF&PA WFCM shall not apply to buildings sited on the upper half of an isolated hill, ridge or escarpment meeting the following conditions:

1. The hill, ridge or escarpment is 60 feet (18 288 mm) or higher if located in Exposure B or 30 feet (9144 mm) or higher if located in Exposure C;

2. The maximum average slope of the hill exceeds 10 percent; and

3. The hill, ridge or escarpment is unobstructed upwind by other such topographic features for a distance from the high point of 50 times the height of the hill or 1 mile (1.61 km), whichever is greater.

1609A.1.1.2 [For DSA – SS] Special Wind Regions. *The basic wind speed for projects located in special wind regions as defined in Figure 1609A shall conform with the adopted ordinance of the city, county, or city and county in which the project site is located, and shall be approved by DSA.*

1609*A*.1.2 Protection of openings. In wind-borne debris regions, glazing in buildings shall be impact-resistant or protected with an impact-resistant covering meeting the requirements of an approved impact-resisting standard or ASTM E 1996 and ASTM E 1886 referenced therein as follows:

1. Glazed openings located within 30 feet (9144 mm) of grade shall meet the requirements of the Large Missile Test of ASTM E 1996.

2. Glazed openings located more than 30 feet (9144 mm) above grade shall meet the provisions of the Small Missile Test of ASTM E 1996.

Exceptions:

1. Wood structural panels with a minimum thickness of $^{7}/_{16}$inch (11.1 mm) and maximum panel span of 8 feet (2438 mm) shall be permitted for opening protection in one- and two-story buildings. Panels shall be precut so that they shall be attached to the framing surrounding the opening containing the product with the glazed opening. Panels shall be secured with the attachment hardware provided. Attachments shall be designed to resist the components and cladding loads determined in accordance with the provisions of ASCE 7. Attachment in accordance with Table 1609*A*.1.2 is permitted for buildings with a mean roof height of 33 feet (10 058 mm) or less where wind speeds do not exceed 130 mph (57.2 m/s).

2. Glazing in Occupancy Category I buildings as defined in Section 1604*A*.5, including greenhouses that are occupied for growing plants on a production or research basis, without public access shall be permitted to be unprotected.

3. Glazing in Occupancy Category II, III or IV buildings located over 60 feet (18 288 mm) above the ground and over 30 feet (9144 mm) above aggregate surface roofs located within 1,500 feet (458 m) of the building shall be permitted to be unprotected.

TABLE 1609*A*.1.2 - WIND-BORNE DEBRIS PROTECTION FASTENING SCHEDULE FOR WOOD STRUCTURAL PANELS[a,b,c,d]

FASTENER TYPE	FASTENER SPACING (inches)		
	Panel Span ≤ 4 feet	4 feet < Panel Span ≤ 6 feet	6 feet < Panel Span ≤ 8 feet
No. 6 screws	16	12	9
No. 8 screws	16	16	12

For SI: 1 inch = 25.4 mm,
1 foot = 304.8 mm,
1 pound = 4.4 N,
1 mile per hour = 0.44 m/s.

a. This table is based on a maximum wind speed (3-second gust) of 130 mph and mean roof height of 33 feet or less.

b. Fasteners shall be installed at opposing ends of the wood structural panel. Fasteners shall be located a minimum of 1 inch from the edge of the panel.

c. Fasteners shall be long enough to penetrate through the exterior wall covering a minimum of 1.75 inches into wood wall framing; a minimum of 1.25 inches into concrete block or concrete; or into steel framing by at least three threads. Fasteners shall be located a minimum of 2.5 inches from the edge of concrete block or concrete.

d. Where screws are attached to masonry or masonry/stucco, they shall be attached utilizing vibration-resistant anchors having a minimum withdrawal capacity of 490 pounds.

1609A.1.2.1 Louvers. Louvers protecting intake and exhaust ventilation ducts not assumed to be open that are located within 30 feet (9144 mm) of grade shall meet requirements of an approved impact-resisting standard or the Large Missile Test of ASTM E 1996.

1609A.1.3 *(Relocated from 1620A, 2001 CBC)* ***Story Drift for Wind Loads****. The calculated story drift due to wind pressures shall not exceed 0.005 times the story height for buildings less than 65 feet (19,812 mm) in height or 0.004 times the story height for buildings 65 feet (19,812 mm) or greater in height.*

1609A.2 Definitions. The following words and terms shall, for the purposes of Section 1609A, have the meanings shown herein.

HURRICANE-PRONE REGIONS. Areas vulnerable to hurricanes defined as:

1. The U. S. Atlantic Ocean and Gulf of Mexico coasts where the basic wind speed is greater than 90 mph (40 m/s) and

2. Hawaii, Puerto Rico, Guam, Virgin Islands and American Samoa.

WIND-BORNE DEBRIS REGION. Portions of hurricane-prone regions that are within 1 mile (1.61 km) of the coastal mean high water line where the basic wind speed is 110 mph (48 m/s) or greater; or portions of hurricane-prone regions where the basic wind speed is 120 mph (53 m/s) or greater; or Hawaii.

1609A.3 Basic wind speed. The basic wind speed, in mph, for the determination of the wind loads shall be determined by Figure 1609A. Basic wind speed for the special wind regions indicated, near mountainous terrain and near gorges shall be in accordance with local jurisdiction requirements. Basic wind speeds determined by the local jurisdiction shall be in accordance with Section 6.5.4 of ASCE 7.

In nonhurricane-prone regions, when the basic wind speed is estimated from regional climatic data, the basic wind speed shall be not less than the wind speed associated with an annual probability of 0.02 (50-year mean recurrence interval), and the estimate shall be adjusted for equivalence to a 3-second gust wind speed at 33 feet (10 m) above ground in Exposure Category C. The data analysis shall be performed in accordance with Section 6.5.4.2 of ASCE 7.

1609A.3.1 Wind speed conversion. When required, the 3-second gust basic wind speeds of Figure 1609A shall be converted to fastest-mile wind speeds, V_{fm}, using Table 1609A.3.1 or Equation 16A-34.

$$V_{fm} = \frac{(V_{3S} - 10.5)}{1.05}$$

(Equation 16A-34)

where:

V_{3S} = 3-second gust basic wind speed from Figure 1609A.

TABLE 1609A.3.1 - EQUIVALENT BASIC WIND SPEEDS[a,b,c]

V_{3S}	85	90	100	105	110	120	125	130	140	145	150	160	170
V_{fm}	71	76	85	90	95	104	109	114	123	128	133	142	152

For SI: 1 mile per hour = 0.44 m/s.

a. Linear interpolation is permitted.

b. V_{3S} is the 3-second gust wind speed (mph).

c. V_{fm} is the fastest mile wind speed (mph).

1609A.4 Exposure category. For each wind direction considered, an exposure category that adequately reflects the characteristics of ground surface irregularities shall be determined for the site at which the building or structure is to be constructed. Account shall be taken of variations in ground surface roughness that arise from natural topography and vegetation as well as from constructed features.

Exception: *(Relocated from 1619A, CBC 2001) The wind design shall comply with Exposure C requirements unless the architect or structural engineer in general responsible charge can justify to the enforcement agency that the building site and surrounding terrain conform to the criteria for Exposure B. Minimum data to establish the exposure category shall be a topographic map (e.g., United States Geological Survey quadrangle maps) and aerial photographs except ~~Exception~~: that for Exposure B sites located within urban areas, a vicinity map of sufficient size and scale to verify compliance may be provided.*

1609A.4.1 Wind directions and sectors. For each selected wind direction at which the wind loads are to be evaluated, the exposure of the building or structure shall be determined for the two upwind sectors extending 45 degrees (0.79 rad) either side of the selected wind direction. The exposures in these two sectors shall be determined in accordance with Sections 1609A.4.2 and 1609A.4.3 and the exposure resulting in the highest wind loads shall be used to represent winds from that direction.

1609A.4.2 Surface roughness categories. A ground surface roughness within each 45-degree (0.79 rad) sector shall be determined for a distance upwind of the site as defined in Section 1609A.4.3 from the categories defined below, for the purpose of assigning an exposure category as defined in Section 1609A.4.3.

Surface Roughness B. Urban and suburban areas, wooded areas or other terrain with numerous closely spaced obstructions having the size of single-family dwellings or larger.

Surface Roughness C. Open terrain with scattered obstructions having heights generally less than 30 feet (9144 mm). This category includes flat open country, grasslands, and all water surfaces in hurricane-prone regions.

Surface Roughness D. Flat, unobstructed areas and water surfaces outside hurricane-prone regions. This category includes smooth mud flats, salt flats and unbroken ice.

1609A.4.3 Exposure categories. An exposure category shall be determined in accordance with the following:

Exposure B. Exposure B shall apply where the ground surface roughness condition, as defined by Surface Roughness B, prevails in the upwind direction for a distance of at least 2,600 feet (792 m) or 20 times the height of the building, whichever is greater.

Exception: For buildings whose mean roof height is less than or equal to 30 feet (9144 mm), the upwind distance is permitted to be reduced to 1,500 feet (457 m).

Exposure C. Exposure C shall apply for all cases where Exposures B or D do not apply.

Exposure D. Exposure D shall apply where the ground surface roughness, as defined by Surface Roughness D, prevails in the upwind direction for a distance of at least 5,000 feet (1524 m) or 20 times the height of the building, whichever is greater. Exposure D shall extend inland from the shoreline for a distance of 600 feet (183 m) or 20 times the height of the building, whichever is greater.

1609A.5 Roof systems.

1609A.5.1 Roof deck. The roof deck shall be designed to withstand the wind pressures determined in accordance with ASCE 7.

1609A.5.2 Roof coverings. Roof coverings shall comply with Section 1609A.5.1.

Exception: Rigid tile roof coverings that are air permeable and installed over a roof deck complying with Section 1609A.5.1 are permitted to be designed in accordance with Section 1609A.5.3.

Asphalt shingles installed over a roof deck complying with Section 1609A.5.1 shall be tested to determine the resistance of the sealant to uplift forces using ASTM D 6381.

Asphalt shingles installed over a roof deck complying with Section 1609A.5.1 are permitted to be designed using UL 2390 to determine appropriate uplift and force coefficients applied to the shingle.

1609A.5.3 Rigid tile. Wind loads on rigid tile roof coverings shall be determined in accordance with the following equation:

$M_a = q_h C_L b L L_a [1.0 - GC_p]$
(Equation 16A-35)

For SI: $M_a = \dfrac{q_h C_L b L L_a \left[1.0 - GC_p\right]}{1{,}000}$

where:

b = Exposed width, feet (mm) of the roof tile.

C_L = Lift coefficient. The lift coefficient for concrete and clay tile shall be 0.2 or shall be determined by test in accordance with Section 1715A.2.

GC_p = Roof pressure coefficient for each applicable roof zone determined from Chapter 6 of ASCE 7. Roof coefficients shall not be adjusted for internal pressure.

L = Length, feet (mm) of the roof tile.

L_a = Moment arm, feet (mm) from the axis of rotation to the point of uplift on the roof tile. The point of uplift shall be taken at 0.76L from the head of the tile and the middle of the exposed width. For roof tiles with nails or screws (with or without a tail clip), the axis of rotation shall be taken as the head of the tile for direct deck application or as the top edge of the batten for battened applications. For roof tiles fastened only by a nail or screw along the side of the tile, the axis of rotation shall be determined by testing. For roof tiles installed with battens and fastened only by a clip near the tail of the tile, the moment arm shall be determined about the top edge of the batten with consideration given for the point of rotation of the tiles based on straight bond or broken bond and the tile profile.

M_a = Aerodynamic uplift moment, feet-pounds (N-mm) acting to raise the tail of the tile.

q_h = Wind velocity pressure, psf (kN/m^2) determined from Section 6.5.10 of ASCE 7.

Concrete and clay roof tiles complying with the following limitations shall be designed to withstand the aerodynamic uplift moment as determined by this section.

1. The roof tiles shall be either loose laid on battens, mechanically fastened, mortar set or adhesive set.

2. The roof tiles shall be installed on solid sheathing which has been designed as components and cladding.

3. An underlayment shall be installed in accordance with Chapter 15.

4. The tile shall be single lapped interlocking with a minimum head lap of not less than 2 inches (51 mm).

5. The length of the tile shall be between 1.0 and 1.75 feet (305 mm and 533 mm).

6. The exposed width of the tile shall be between 0.67 and 1.25 feet (204 mm and 381 mm).

7. The maximum thickness of the tail of the tile shall not exceed 1.3 inches (33 mm).

8. Roof tiles using mortar set or adhesive set systems shall have at least two-thirds of the tile's area free of mortar or adhesive contact.

SECTION 1610*A* - SOIL LATERAL LOAD

1610*A*.1 General. Basement, foundation and retaining walls shall be designed to resist lateral soil loads. Soil loads specified in Table 1610*A*.1 shall be used as the minimum design lateral soil loads unless specified otherwise in a soil investigation report approved by the building official. Basement walls and other walls in which horizontal movement is restricted at the top shall be designed for at-rest pressure. Retaining walls free to move and rotate at the top are permitted to be designed for active pressure. Design lateral pressure from surcharge loads shall be added to the lateral earth pressure load. Design lateral pressure shall be increased if soils with expansion potential are present at the site.

Exception: Basement walls extending not more than 8 feet (2438 mm) below grade and supporting flexible floor systems shall be permitted to be designed for active pressure.

TABLE 1610*A*.1 - SOIL LATERAL LOAD

DESCRIPTION OF BACKFILL MATERIAL[c]	UNIFIED SOIL CLASSIFICATION	DESIGN LATERAL SOIL LOAD[a] (pound per square foot per foot of depth)	
		Active pressure	At-rest pressure
Well-graded, clean gravels; gravel-sand mixes	GW	30	60
Poorly graded clean gravels; gravel-sand mixes	GP	30	60
Silty gravels, poorly graded gravel-sand mixes	GM	40	60
Clayey gravels, poorly graded gravel-and-clay mixes	GC	45	60
Well-graded, clean sands; gravelly sand mixes	SW	30	60
Poorly graded clean sands; sand-gravel mixes	SP	30	60
Silty sands, poorly graded sand-silt mixes	SM	45	60
Sand-silt clay mix with plastic fines	SM-SC	45	100
Clayey sands, poorly graded sand-clay mixes	SC	60	100
Inorganic silts and clayey silts	ML	45	100
Mixture of inorganic silt and clay	ML-CL	60	100
Inorganic clays of low to medium plasticity	CL	60	100
Organic silts and silt clays, low plasticity	OL	Note b	Note b
Inorganic clayey silts, elastic silts	MH	Note b	Note b
Inorganic clays of high plasticity	CH	Note b	Note b
Organic clays and silty clays	OH	Note b	Note b

For SI: 1 pound per square foot per foot of depth = 0.157 kPa/m, 1 foot = 304.8 mm.

a. Design lateral soil loads are given for moist conditions for the specified soils at their optimum densities. Actual field conditions shall govern. Submerged or saturated soil pressures shall include the weight of the buoyant soil plus the hydrostatic loads.

b. Unsuitable as backfill material.

c. The definition and classification of soil materials shall be in accordance with ASTM D 2487.

SECTION 1611A - RAIN LOADS

1611A.1 Design rain loads. Each portion of a roof shall be designed to sustain the load of rainwater that will accumulate on it if the primary drainage system for that portion is blocked plus the uniform load caused by water that rises above the inlet of the secondary drainage system at its design flow.

$R = 5.2\ (d_s + d_h)$
(Equation 16A-36)

For SI: $R = 0.0098\ (d_s + d_h)$

where:

d_h = Additional depth of water on the undeflected roof above the inlet of secondary drainage system at its design flow (i.e., the hydraulic head), in inches (mm).

d_s = Depth of water on the undeflected roof up to the inlet of secondary drainage system when the primary drainage system is blocked (i.e., the static head), in inches (mm).

R = Rain load on the undeflected roof, in psf (kN/m^2). When the phrase "undeflected roof" is used, deflections from loads (including dead loads) shall not be considered when determining the amount of rain on the roof.

1611A.2 Ponding instability. For roofs with a slope less than $^1/_4$inch per foot [1.19 degrees (0.0208 rad)], the design calculations shall include verification of adequate stiffness to preclude progressive deflection in accordance with Section 8.4 of ASCE 7.

1611A.3 Controlled drainage. Roofs equipped with hardware to control the rate of drainage shall be equipped with a secondary drainage system at a higher elevation that limits accumulation of water on the roof above that elevation. Such roofs shall be designed to sustain the load of rainwater that will accumulate on them to the elevation of the secondary drainage system plus the uniform load caused by water that rises above the inlet of the secondary drainage system at its design flow determined from Section 1611A.1. Such roofs shall also be checked for ponding instability in accordance with Section 1611A.2.

SECTION 1612A - FLOOD LOADS

1612A.1 General. Within flood hazard areas as established in Section 1612A.3, all new construction of buildings, structures and portions of buildings and structures, including substantial improvement and restoration of substantial damage to buildings and structures, shall be designed and constructed to resist the effects of flood hazards and flood loads. For buildings that are located in more than one flood hazard area, the provisions associated with the most restrictive flood hazard area shall apply.

1612A.2 Definitions. The following words and terms shall, for the purposes of this section, have the meanings shown herein.

BASE FLOOD. The flood having a 1-percent chance of being equaled or exceeded in any given year.

BASE FLOOD ELEVATION. The elevation of the base flood, including wave height, relative to the National Geodetic Vertical Datum (NGVD), North American Vertical Datum (NAVD) or other datum specified on the Flood Insurance Rate Map (FIRM).

BASEMENT. The portion of a building having its floor subgrade (below ground level) on all sides.

DESIGN FLOOD. The flood associated with the greater of the following two areas:

1. Area with a flood plain subject to a 1-percent or greater chance of flooding in any year; or

2. Area designated as a flood hazard area on a community's flood hazard map, or otherwise legally designated.

DESIGN FLOOD ELEVATION. The elevation of the "design flood," including wave height, relative to the datum specified on the community's legally designated flood hazard map. In areas designated as Zone AO, the design flood elevation shall be the elevation of the highest existing grade of the building's perimeter plus the depth number (in feet) specified on the flood hazard map. In areas designated as Zone AO where a depth number is not specified on the map, the depth number shall be taken as being equal to 2 feet (610 mm).

DRY FLOODPROOFING. A combination of design modifications that results in a building or structure, including the attendant utility and sanitary facilities, being water tight with walls substantially impermeable to the passage of water and with structural components having the capacity to resist loads as identified in ASCE 7.

EXISTING CONSTRUCTION. Any buildings and structures for which the "start of construction" commenced before the effective date of the community's first flood plain management code, ordinance or standard. "Existing construction" is also referred to as "existing structures."

EXISTING STRUCTURE. See "Existing construction."

FLOOD or FLOODING. A general and temporary condition of partial or complete inundation of normally dry land from:

1. The overflow of inland or tidal waters.

2. The unusual and rapid accumulation or runoff of surface waters from any source.

FLOOD DAMAGE-RESISTANT MATERIALS. Any construction material capable of withstanding direct and prolonged contact with floodwaters without sustaining any damage that requires more than cosmetic repair.

FLOOD HAZARD AREA. The greater of the following two areas:

1. The area within a flood plain subject to a 1-percent or greater chance of flooding in any year.

2. The area designated as a flood hazard area on a community's flood hazard map, or otherwise legally designated.

FLOOD HAZARD AREA SUBJECT TO HIGH VELOCITY WAVE ACTION. Area within the flood hazard area that is subject to high velocity wave action, and shown on a Flood Insurance Rate Map (FIRM) or other flood hazard map as Zone V, VO, VE or V1-30.

FLOOD INSURANCE RATE MAP (FIRM). An official map of a community on which the Federal Emergency Management Agency (FEMA) has delineated both the special flood hazard areas and the risk premium zones applicable to the community.

FLOOD INSURANCE STUDY. The official report provided by the Federal Emergency Management Agency containing the Flood Insurance Rate Map (FIRM), the Flood Boundary and Floodway Map (FBFM), the water surface elevation of the base flood and supporting technical data.

FLOODWAY. The channel of the river, creek or other watercourse and the adjacent land areas that must be reserved in order to discharge the base flood without cumulatively increasing the water surface elevation more than a designated height.

LOWEST FLOOR. The floor of the lowest enclosed area, including basement, but excluding any unfinished or flood-resistant enclosure, usable solely for vehicle parking, building access or limited storage provided that such enclosure is not built so as to render the structure in violation of this section.

SPECIAL FLOOD HAZARD AREA. The land area subject to flood hazards and shown on a Flood Insurance Rate Map or other flood hazard map as Zone A, AE, A1-30, A99, AR, AO, AH, V, VO, VE or V1-30.

START OF CONSTRUCTION. The date of permit issuance for new construction and substantial improvements to existing structures, provided the actual start of construction, repair, reconstruction, rehabilitation, addition, placement or other improvement is within 180 days after the date of issuance. The actual start of construction means the first placement of permanent construction of a building (including a manufactured home) on a site, such as the pouring of a slab or footings, installation of pilings or construction of columns.

Permanent construction does not include land preparation (such as clearing, excavation, grading or filling), the installation of streets or walkways, excavation for a basement, footings, piers or foundations, the erection of temporary forms or the installation of accessory buildings such as garages or sheds not occupied as dwelling units or not part of the main building. For a substantial improvement, the actual "start of construction" means the first alteration of any wall, ceiling, floor or other structural part of a building, whether or not that alteration affects the external dimensions of the building.

SUBSTANTIAL DAMAGE. Damage of any origin sustained by a structure whereby the cost of restoring the structure to its before-damaged condition would equal or exceed 50 percent of the market value of the structure before the damage occurred.

SUBSTANTIAL IMPROVEMENT. Any repair, reconstruction, rehabilitation, addition or improvement of a building or structure, the cost of which equals or exceeds 50 percent of the market value of the structure before the improvement or repair is started. If the structure has sustained substantial damage, any repairs are considered substantial improvement regardless of the actual repair work performed. The term does not, however, include either:

1. Any project for improvement of a building required to correct existing health, sanitary or safety code violations identified by the building official and that are the minimum necessary to assure safe living conditions.

2. Any alteration of a historic structure provided that the alteration will not preclude the structure's continued designation as a historic structure.

1612*A*.3 Establishment of flood hazard areas. To establish flood hazard areas, the governing body shall adopt a flood hazard map and supporting data. The flood hazard map shall include, at a minimum, areas of special flood hazard as identified by the Federal Emergency Management ~~Agency in an engineering report entitled "The Flood Insurance Study for [INSERT NAME OF JURISDICTION]," dated [INSERT DATE OF ISSUANCE]~~ *Agency's Flood Insurance Study (FIS) adopted by the local authority having jurisdiction where the project is located*, as amended or revised with the accompanying Flood Insurance Rate Map (FIRM) and Flood Boundary and Floodway Map (FBFM) and related supporting data along with any revisions thereto. The adopted flood hazard map and supporting data are hereby adopted by reference and declared to be part of this section.

1612*A*.4 Design and construction. The design and construction of buildings and structures located in flood hazard areas, including flood hazard areas subject to high velocity wave action, shall be in accordance with ASCE 24.

1612*A*.5 Flood hazard documentation. The following documentation shall be prepared and sealed by a registered design professional and submitted to the building official:

1. For construction in flood hazard areas not subject to high-velocity wave action:

    1.1. The elevation of the lowest floor, including the basement, as required by the lowest floor elevation inspection in Section 109.3.3, *Appendix Chapter 1.*

    1.2. For fully enclosed areas below the design flood elevation where provisions to allow for the automatic entry and exit of floodwaters do not meet the minimum requirements in Section 2.6.2.1 of ASCE 24, construction documents shall include a statement that the design will provide for equalization of hydrostatic flood forces in accordance with Section 2.6.2.2 of ASCE 24.

    1.3. For dry floodproofed nonresidential buildings, construction documents shall include a statement that the dry floodproofing is designed in accordance with ASCE 24.

2. For construction in flood hazard areas subject to high-velocity wave action:

    2.1. The elevation of the bottom of the lowest horizontal structural member as required by the lowest floor elevation inspection in Section 109.3.3*, Appendix Chapter 1.*

2.2. Construction documents shall include a statement that the building is designed in accordance with ASCE 24, including that the pile or column foundation and building or structure to be attached thereto is designed to be anchored to resist flotation, collapse and lateral movement due to the effects of wind and flood loads acting simultaneously on all building components, and other load requirements of Chapter 16*A*.

2.3. For breakaway walls designed to resist a nominal load of less than 10 psf (0.48 kN/m^2) or more than 20 psf (0.96 kN/m^2), construction documents shall include a statement that the breakaway wall is designed in accordance with ASCE 24.

SECTION 1613*A* - EARTHQUAKE LOADS

1613*A*.1 Scope. Every structure, and portion thereof, including nonstructural components that are permanently attached to structures and their supports and attachments, shall be designed and constructed to resist the effects of earthquake motions in accordance with ASCE 7 *with all the modifications incorporated herein*, excluding Chapter 14 and Appendix 11A. The seismic design category for a structure ~~is permitted to~~ *shall* be determined in accordance with Section 1613*A* ~~or ASCE 7~~.

Exceptions:

1. *Not permitted by OSHPD and DSA-SS.* ~~Detached one- and two-family dwellings, assigned to Seismic Design Category A, B or C, or located where the mapped short-period spectral response acceleration, SS, is less than 0.4 g.~~

2. *Not permitted by OSHPD and DSA-SS*. ~~The seismic-force-resisting system of wood-frame buildings that conform to the provisions of Section 2308 are not required to be analyzed as specified in this section.~~

3. *Not permitted by OSHPD and DSA-SS.* ~~Agricultural storage structures intended only for incidental human occupancy.~~

4. Structures that require special consideration of their response characteristics and environment that are not addressed by this code or ASCE 7 and for which other regulations provide seismic criteria, such as vehicular bridges, electrical transmission towers, hydraulic structures, buried utility lines and their appurtenances and nuclear reactors.

1613A.1.1 *(Relocated from 1626A.4, 2001 CBC)* ***Configuration.*** *When the design of a structure, due to the unusual configuration of the structure or parts of the structure, does not provide at least the same safety against earthquake damage as provided by the applicable portions of this section, when applied in the design of a similar structure of customary configuration, framing and assembly of materials, the enforcement agency shall withhold its approval.*

1613*A*.2 Definitions. The following words and terms shall, for the purposes of this section, have the meanings shown herein. *Definition provided in Section 3402A.1 and ASCE 7 Section 11.2 shall apply when appropriate in addition to terms defined in this section.*

(Relocated from 1641A, 2001 CBC) ***ACTIVE EARTHQUAKE FAULT.*** *A fault that has exhibited surface displacement within Holocene time (about 11,000 years) as determined by California Division of Mines & Geology under the Alquist-Priolo Earthquake Fault Zoning Act or other authoritative source, Federal, State or Local Governmental Agency.*

(Relocated from 1627A, 2001 CBC) ***BASE.*** *The level at which the horizontal seismic ground motions are considered to be imparted to the structure or the level at which the structure as a dynamic vibrator is supported. This level does not necessarily coincide with the ground level.*

DESIGN EARTHQUAKE GROUND MOTION. The earthquake ground motion that buildings and structures are specifically proportioned to resist in Section 1613*A*.

(Relocated from 1641A, 2001 CBC) ***DISTANCE FROM AN ACTIVE EARTHQUAKE FAULT.*** *Distance measured from the nearest point of the building to the closest edge of an Alquist-Priolo Earthquake fault zone for an active fault, if such a map exists, or to the closest mapped splay of the fault.*

(Relocated from 1627A, 2001 CBC) ***HOSPITAL BUILDINGS. H****ospital buildings and all other medical facilities as defined in Section 1250, Health and Safety Code.*

(Relocated from 1627A, 2001 CBC) ***IRREGULAR STRUCTURE.*** *A structure designed as having one or more plan or vertical irregularities per ASCE 7 Section 12.3.*

MAXIMUM CONSIDERED EARTHQUAKE GROUND MOTION. The most severe earthquake effects considered by this code.

MECHANICAL SYSTEMS. For the purposes of determining seismic loads in ASCE 7, mechanical systems shall include plumbing systems as specified therein.

ORTHOGONAL. To be in two horizontal directions, at 90 degrees (1.57 rad) to each other.

SEISMIC DESIGN CATEGORY. A classification assigned to a structure based on its occupancy category and the severity of the design earthquake ground motion at the site.

SEISMIC-FORCE-RESISTING SYSTEM. That part of the structural system that has been considered in the design to provide the required resistance to the prescribed seismic forces.

SITE CLASS. A classification assigned to a site based on the types of soils present and their engineering properties as defined in Section 1613*A*.5.2.

SITE COEFFICIENTS. The values of F_a and $F_v$indicated in Tables 1613*A*.5.3(1) and 1613*A*.5.3(2), respectively.

(Relocated from 1627A, 2001 CBC) ***SOIL-STRUCTURE RESONANCE.*** *The coincidence of the natural period of a structure with a dominant frequency of the ground motion.*

(Relocated from 1627A, 2001 CBC) ***STRUCTURAL ELEMENTS.*** *Floor or roof diaphragms, decking, joists, slabs, beams, or girders, columns, bearing walls, retaining walls, masonry or concrete nonbearing walls exceeding one story in height, foundations, shear walls or other lateral-force-resisting members, and any other elements necessary to the vertical and lateral strength or stability of either the building as a whole or any of its parts, including connection between such elements.*

1613*A*.3 Existing buildings. ***[For OSHPD 1 & 4]*** Additions, alterations, modification, or change of occupancy of existing buildings shall be in accordance with Sections 3403*A*.2.3 and 3406*A*.4.

1613*A*.4 Special inspections. Where required by Section 1705*A*.3, the statement of special inspections shall include the special inspections required by Section 1705*A*.3.1.

1613*A*.5 Seismic ground motion values. Seismic ground motion values shall be determined in accordance with this section.

(Figure 1613.5(1) is stricken.)

~~**FIGURE 1613.5(1) MAXIMUM CONSIDERED EARTHQUAKE GROUND MOTION FOR THE CONTERMINOUS UNITED STATES OF 0.2 SEC SPECTRAL RESPONSE ACCELERATION (5% OF CRITICAL DAMPING), SITE CLASS B**~~

(Figure 1613.5(1) "—continued" is stricken.)

~~**FIGURE 1613.5(1)—continued MAXIMUM CONSIDERED EARTHQUAKE GROUND MOTION FOR THE CONTERMINOUS UNITED STATES OF 0.2 SEC SPECTRAL RESPONSE ACCELERATION (5% OF CRITICAL DAMPING), SITE CLASS B**~~

(Figure 1613.5(2) is stricken.)

~~**FIGURE 1613.5(2) MAXIMUM CONSIDERED EARTHQUAKE GROUND MOTION FOR THE CONTERMINOUS UNITED STATES OF 1.0 SEC SPECTRAL RESPONSE ACCELERATION (5% OF CRITICAL DAMPING), SITE CLASS B**~~

(Figure 1613.5(2) "—continued" is stricken.)

~~**FIGURE 1613.5(2)—continued MAXIMUM CONSIDERED EARTHQUAKE GROUND MOTION FOR THE CONTERMINOUS UNITED STATES OF 1.0 SEC SPECTRAL RESPONSE ACCELERATION (5% OF CRITICAL DAMPING), SITE CLASS B**~~

(Figure 1613.5(3) is stricken.)

~~**FIGURE 1613.5(3) MAXIMUM CONSIDERED EARTHQUAKE GROUND MOTION FOR REGION 1 OF 0.2 SEC SPECTRAL RESPONSE ACCELERATION (5% OF CRITICAL DAMPING), SITE CLASS B**~~

(Figure 1613.5(3) "—continued" is stricken.)

~~**FIGURE 1613.5(3)—continued MAXIMUM CONSIDERED EARTHQUAKE GROUND MOTION FOR REGION 1 OF 0.2 SEC SPECTRAL RESPONSE ACCELERATION (5% OF CRITICAL DAMPING), SITE CLASS B**~~

(Figure 1613.5(4) is stricken.)

~~**FIGURE 1613.5(4) MAXIMUM CONSIDERED EARTHQUAKE GROUND MOTION FOR REGION 1 OF 1.0 SEC SPECTRAL RESPONSE ACCELERATION (5% OF CRITICAL DAMPING), SITE CLASS B**~~

(Figure 1613.5(4) "—continued" is stricken.)

~~**FIGURE 1613.5(4) continued MAXIMUM CONSIDERED EARTHQUAKE GROUND MOTION FOR REGION 1 OF 1.0 SEC SPECTRAL RESPONSE ACCELERATION (5% OF CRITICAL DAMPING), SITE CLASS B**~~

(Figure 1613.5(5) is stricken.)

~~**FIGURE 1613.5(5) MAXIMUM CONSIDERED EARTHQUAKE GROUND MOTION FOR REGION 2 OF 0.2 SEC SPECTRAL RESPONSE ACCELERATION (5% OF CRITICAL DAMPING), SITE CLASS B**~~

(Figure 1613.5(6) is stricken.)

~~**FIGURE 1613.5(6) MAXIMUM CONSIDERED EARTHQUAKE GROUND MOTION FOR REGION 2 OF 1.0 SEC SPECTRAL RESPONSE ACCELERATION (5% OF CRITICAL DAMPING), SITE CLASS B**~~

(Figure 1613.5(7) is stricken.)

~~**FIGURE 1613.5(7) MAXIMUM CONSIDERED EARTHQUAKE GROUND MOTION FOR REGION 3 OF 0.2 SEC SPECTRAL RESPONSE ACCELERATION (5% PERCENT OF CRITICAL DAMPING), SITE CLASS B**~~

(Figure 1613.5(8) is stricken.)

~~**FIGURE 1613.5(8) MAXIMUM CONSIDERED EARTHQUAKE GROUND MOTION FOR REGION 3 OF 1.0 SEC SPECTRAL RESPONSE ACCELERATION (5% OF CRITICAL DAMPING), SITE CLASS B**~~

(Figure 1613.5(9) is stricken.)

~~**FIGURE 1613.5(9) MAXIMUM CONSIDERED EARTHQUAKE GROUND MOTION FOR REGION 4 OF 0.2 AND 1.0 SEC SPECTRAL RESPONSE ACCELERATION (5% OF CRITICAL DAMPING), SITE CLASS B**~~

(Figure 1613.5(10) is stricken.)

~~**FIGURE 1613.5(10) MAXIMUM CONSIDERED EARTHQUAKE GROUND MOTION FOR HAWAII OF 0.2 AND 1.0 SEC SPECTRAL RESPONSE ACCELERATION (5% OF CRITICAL DAMPING), SITE CLASS B**~~

(Figure 1613.5(11) is stricken.)

~~**FIGURE 1613.5(11) MAXIMUM CONSIDERED EARTHQUAKE GROUND MOTION FOR ALASKA OF 0.2 SEC SPECTRAL RESPONSE ACCELERATION (5% OF CRITICAL DAMPING), SITE CLASS B**~~

(Figure 1613.5(12) is stricken.)

~~**FIGURE 1613.5(12) MAXIMUM CONSIDERED EARTHQUAKE GROUND MOTION FOR ALASKA OF 1.0 SEC SPECTRAL RESPONSE ACCELERATION (5% OF CRITICAL DAMPING), SITE CLASS B**~~

(Figure 1613.5(13) is stricken.)

~~**FIGURE 1613.5(13) MAXIMUM CONSIDERED EARTHQUAKE GROUND MOTION FOR PUERTO RICO, CULEBRA, VIEQUES, ST. THOMAS, ST. JOHN AND ST. CROIX OF 0.2 AND 1.0 SEC SPECTRAL RESPONSE ACCELERATION (5% OF CRITICAL DAMPING), SITE CLASS B**~~

(Figure 1613.5(14) is stricken.)

~~**FIGURE 1613.5(14) MAXIMUM CONSIDERED EARTHQUAKE GROUND MOTION FOR GUAM AND TUTUILLA OF 0.2 AND 1.0 SEC SPECTRAL RESPONSE ACCELERATION (5% OF CRITICAL DAMPING), SITE CLASS B**~~

1613A.5.1 Mapped acceleration parameters. The parameters Ss and S1 shall be determined from the 0.2 and 1-second spectral response accelerations shown on Figures 1613.5(1) through 1613.5(14). ~~Where S_1 is less than or equal to 0.04 and S_s is less than or equal to 0.15, the structure is permitted to be assigned to Seismic Design Category A.~~

1613*A*.5.2 Site class definitions. Based on the site soil properties, the site shall be classified as either Site Class A, B, C, D, E or F in accordance with Table 1613*A*.5.2. When the soil properties are not known in sufficient detail to determine the site class, Site Class D shall be used unless the building official or geotechnical data determines that Site Class E or F soil is likely to be present at the site.

TABLE 1613*A*.5.2 - SITE CLASS DEFINITIONS

SITE CLASS	SOIL PROFILE NAME	AVERAGE PROPERTIES IN TOP 100 feet, SEE SECTION 1613A.5.5		
		Soil shear wave velocity, $\bar{v}_s$, (ft/s)	Standard penetration resistance, $\bar{N}$	Soil undrained shear strength, $\bar{s}_u$, (psf)
A	Hard rock	$\bar{v}_s > 5{,}000$	N/A	N/A
B	Rock	$2{,}500 < \bar{v}_s \leq 5{,}000$	N/A	N/A
C	Very dense soil and soft rock	$1{,}200 < \bar{v}_s \leq 2{,}500$	$\bar{N} > 50$	$\bar{s}_u \geq 2{,}000$
D	Stiff soil profile	$600 \leq \bar{v}_s \leq 1{,}200$	$15 \leq \bar{N} \leq 50$	$1{,}000 \leq \bar{s}_u \leq 2{,}000$
E	Soft soil profile	$\bar{v}_s < 600$	$\bar{N} < 15$	$\bar{s}_u < 1{,}000$
E	—	Any profile with more than 10 feet of soil having the following characteristics: 1. Plasticity index $PI > 20$, 2. Moisture content $w \geq 40\%$, and 3. Undrained shear strength $\bar{s}_u < 500$ psf		
F	—	Any profile containing soils having one or more of the following characteristics: 1. Soils vulnerable to potential failure or collapse under seismic loading such as liquefiable soils, quick and highly sensitive clays, collapsible weakly cemented soils. 2. Peats and/or highly organic clays ($H > 10$ feet of peat and/or highly organic clay where H = thickness of soil) 3. Very high plasticity clays ($H > 25$ feet with plasticity index $PI > 75$) 4. Very thick soft/medium stiff clays ($H > 120$ feet)		

For SI: 1 foot = 304.8 mm, 1 square foot = 0.0929 m^2, 1 pound per square foot = 0.0479 kPa. N/A = Not applicable

1613A.5.3 Site coefficients and adjusted maximum considered earthquake spectral response acceleration parameters. The maximum considered earthquake spectral response acceleration for short periods, S_{MS}, and at 1-second period, S_{M1}, adjusted for site class effects shall be determined by Equations 16A-37 and 16A-38, respectively:

$S_{MS} = F_a S_s$
(Equation 16A-37)

$S_{M1} = F_v S_1$
(Equation 16A-38)

where:

F_a = Site coefficient defined in Table 1613A.5.3(1).

F_v = Site coefficient defined in Table 1613A.5.3(2).

S_S = The mapped spectral accelerations for short periods as determined in Section 1613A.5.1.

S_1 = The mapped spectral accelerations for a 1-second period as determined in Section 1613A.5.1.

TABLE 1613A.5.3(1) - VALUES OF SITE COEFFICIENT F_a [a]

SITE CLASS	MAPPED SPECTRAL RESPONSE ACCELERATION AT SHORT PERIOD				
	$S_s \leq 0.25$	$S_s = 0.50$	$S_s = 0.75$	$S_s = 1.00$	$S_s \geq 1.25$
A	0.8	0.8	0.8	0.8	0.8
B	1.0	1.0	1.0	1.0	1.0
C	1.2	1.2	1.1	1.0	1.0
D	1.6	1.4	1.2	1.1	1.0
E	2.5	1.7	1.2	0.9	0.9
F	Note b	Note b	Note b	Note b	Note b

a. Use straight-line interpolation for intermediate values of mapped spectral response acceleration at short period, S_s.

b. Values shall be determined in accordance with Section 11.4.7 of ASCE 7.

TABLE 1613A.5.3(2) - VALUES OF SITE COEFFICIENT F_V [a]

SITE CLASS	MAPPED SPECTRAL RESPONSE ACCELERATION AT 1-SECOND PERIOD				
	$S_1 \leq 0.1$	$S_1 = 0.2$	$S_1 = 0.3$	$S_1 = 0.4$	$S_1 \geq 0.5$
A	0.8	0.8	0.8	0.8	0.8
B	1.0	1.0	1.0	1.0	1.0
C	1.7	1.6	1.5	1.4	1.3
D	2.4	2.0	1.8	1.6	1.5
E	3.5	3.2	2.8	2.4	2.4
F	Note b	Note b	Note b	Note b	Note b

a. Use straight-line interpolation for intermediate values of mapped spectral response acceleration at 1-second period, S_1.
b. Values shall be determined in accordance with Section 11.4.7 of ASCE 7.

1613A.5.4 Design spectral response acceleration parameters. Five-percent damped design spectral response acceleration at short periods, S_{DS}, and at 1-second period, S_{D1}, shall be determined from Equations 16A-39 and 16A-40, respectively:

$$S_{DS} = \frac{2}{3} S_{MS}$$ **(Equation 16A-39)**

$$S_{D1} = \frac{2}{3} S_{M1}$$ **(Equation 16A-40)**

where:

S_{MS} = The maximum considered earthquake spectral response accelerations for short period as determined in Section 1613A.5.3.

S_{M1} = The maximum considered earthquake spectral response accelerations for 1-second period as determined in Section 1613A.5.3.

1613A.5.5 Site classification for seismic design. Site classification for Site Class C, D or E shall be determined from Table 1613A.5.5.

The notations presented below apply to the upper 100 feet (30 480 mm) of the site profile. Profiles containing distinctly different soil and/or rock layers shall be subdivided into those layers designated by a number that ranges from 1 to *n* at the bottom where there is a total of *n* distinct layers in the upper 100 feet (30 480 mm). The symbol *i* then refers to any one of the layers between 1 and *n*.

where:

v_{si} = The shear wave velocity in feet per second (m/s).

d_i = The thickness of any layer between 0 and 100 feet (30 480 mm).

where:

$$\bar{v}_s = \frac{\sum_{i=1}^{n} d_i}{\sum_{i=1}^{n} \frac{d_i}{v_{si}}}$$

(Equation 16A-41)

$$\sum_{i=1}^{n} d_i = 100 \text{ feet } (30\,480 \text{ mm})$$

N_i is the Standard Penetration Resistance (ASTM D 1586) not to exceed 100 blows/foot (305 mm) as directly measured in the field without corrections. When refusal is met for a rock layer, N_i shall be taken as 100 blows/foot (305 mm).

$$\bar{N} = \frac{\sum_{i=1}^{n} d_i}{\sum_{i=1}^{n} \frac{d_i}{N_i}}$$

(Equation 16A-42)

where N_i and d_i in Equation 16A-42 are for cohesionless soil, cohesive soil and rock layers.

$$\bar{N}_{ch} = \frac{d_s}{\sum_{i=1}^{m} \frac{d_i}{N_i}}$$

(Equation 16A-43)

where:

$$\sum_{i=1}^{m} d_i = d_s$$

Use d_i and N_i for cohesionless soil layers only in Equation 16A-43.

d_s = The total thickness of cohesionless soil layers in the top 100 feet (30 480 mm).

m = The number of cohesionless soil layers in the top 100 feet (30 480 mm).

s_{ui} = The undrained shear strength in psf (kPa), not to exceed 5,000 psf (240 kPa), ASTM D 2166 or D 2850.

$$\bar{s}_u = \frac{d_c}{\sum_{i=1}^{k} \frac{d_i}{s_{ui}}}$$

(Equation 16A-44)

where:

$$\sum_{i=1}^{k} d_i = d_c$$

d_c = The total thickness of cohesive soil layers in the top 100 feet (30 480 mm).

k = The number of cohesive soil layers in the top 100 feet (30 480 mm).

PI = The plasticity index, ASTM D 4318.

w = The moisture content in percent, ASTM D 2216.

Where a site does not qualify under the criteria for Site Class F and there is a total thickness of soft clay greater than 10 feet (3048 mm) where a soft clay layer is defined by: s_u< 500 psf (24 kPa), $w \geq 40$ percent, and PI > 20, it shall be classified as Site Class E.

The shear wave velocity for rock, Site Class B, shall be either measured on site or estimated by a geotechnical engineer or engineering geologist/seismologist for competent rock with moderate fracturing and weathering. Softer and more highly fractured and weathered rock shall either be measured on site for shear wave velocity or classified as Site Class C.

The hard rock category, Site Class A, shall be supported by shear wave velocity measurements either on site or on profiles of the same rock type in the same formation with an equal or greater degree of weathering and fracturing. Where hard rock conditions are known to be continuous to a depth of 100 feet (30 480 mm), surficial shear wave velocity measurements are permitted to be extrapolated to assess $\bar{v}_s$.

The rock categories, Site Classes A and B, shall not be used if there is more than 10 feet (3048 mm) of soil between the rock surface and the bottom of the spread footing or mat foundation.

TABLE 1613*A*.5.5 - SITE CLASSIFICATION[a]

SITE CLASS	$\overline{v}_s$	$\overline{N}$ or $\overline{N}_{ch}$	$\overline{s}_u$
E	< 600 ft/s	< 15	< 1,000 psf
D	600 to 1,200 ft/s	15 to 50	1,000 to 2,000 psf
C	1,200 to 2,500 ft/s	> 50	> 2,000

For SI: 1 foot per second = 304.8 mm per second, 1 pound per square foot = 0.0479 kN/m^2.

a. If the $\overline{s}_u$ method is used and the $\overline{N}_{ch}$ and $\overline{s}_u$ criteria differ, select the category with the softer soils (for example, use Site Class E instead of D).

1613*A*.5.5.1 Steps for classifying a site.

1. Check for the four categories of Site Class F requiring site-specific evaluation. If the site corresponds to any of these categories, classify the site as Site Class F and conduct a site-specific evaluation.

2. Check for the existence of a total thickness of soft clay> 10 feet (3048 mm) where a soft clay layer is defined by: $\overline{s}_u$ < 500 psf (24 kPa), $w \geq 40$ percent and $PI > 20$. If these criteria are satisfied, classify the site as Site Class E.

3. Categorize the site using one of the following three methods with $\overline{v}_s$, $\overline{N}$, and $\overline{s}_u$ and computed in all cases as specified.

   3.1. $\overline{v}_s$ for the top 100 feet (30 480 mm) ($\overline{v}_s$ method).

   3.2. $\overline{N}_{ch}$ for the top 100 feet (30 480 mm) ($\overline{N}$ method).

   3.3. $\overline{N}$ for cohesionless soil layers ($PI < 20$) in the top 100 feet (30 480 mm) and average, $\overline{s}_u$ for cohesive soil layers ($PI > 20$) in the top 100 feet (30 480 mm) ($\overline{s}_u$ method).

1613*A*.5.6 Determination of seismic design category. Occupancy Category I, II or III structures located where the mapped spectral response acceleration parameter at 1-second period, S_1, is greater than or equal to 0.75 shall be assigned to Seismic Design Category E. Occupancy Category IV structures located where the mapped spectral response acceleration parameter at 1-second period, S_1, is greater than or equal to 0.75 shall be assigned to Seismic Design Category F. All other structures shall be assigned to *seismic design category D.* ~~a seismic design category based on their occupancy category and the design spectral response acceleration coefficients, S_{DS} and S_{D1}, determined in accordance with Section 1613.5.4 or the site-specific procedures of ASCE 7. Each building and structure shall be assigned to the more severe seismic design category in accordance with Table 1613.5.6(1) or 1613.5.6(2), irrespective of the fundamental period of vibration of the structure, T.~~

~~**TABLE 1613.5.6(1) - SEISMIC DESIGN CATEGORY BASED ON SHORT-PERIOD RESPONSE ACCELERATIONS**~~

~~VALUE OF S_{DS}~~	~~OCCUPANCY CATEGORY~~		
	~~I or II~~	~~III~~	~~IV~~
~~$S_{DS} < 0.167g$~~	~~A~~	~~A~~	~~A~~
~~$0.167g \leq S_{DS} < 0.33g$~~	~~B~~	~~B~~	~~C~~
~~$0.33g \leq S_{DS} < 0.50g$~~	~~C~~	~~C~~	~~D~~
~~$0.50g \leq S_{DS}$~~	~~D~~	~~D~~	~~D~~

~~**TABLE 1613.5.6(2) - SEISMIC DESIGN CATEGORY BASED ON 1-SECOND PERIOD RESPONSE ACCELERATION**~~

~~VALUE OF S_{D1}~~	~~OCCUPANCY CATEGORY~~		
	~~I or II~~	~~III~~	~~IV~~
~~$S_{D1} < 0.067g$~~	~~A~~	~~A~~	~~A~~
~~$0.067g \le S_{D1} < 0.133g$~~	~~B~~	~~B~~	~~C~~
~~$0.133g \le S_{D1} < 0.20g$~~	~~C~~	~~C~~	~~D~~
~~$0.20g \le S_{D1}$~~	~~D~~	~~D~~	~~D~~

1613*A*.5.6.1Alternative seismic design category determination. *Not permitted by OSHPD and DSA-SS.* ~~Where S_1 is less than 0.75, the seismic design category is permitted to be determined from Table 1613.5.6(1) alone when all of the following apply:~~

~~1. In each of the two orthogonal directions, the approximate fundamental period of the structure, T_a, in each of the two orthogonal directions determined in accordance with Section 12.8.2.1 of ASCE 7, is less than 0.8 T_s determined in accordance with Section 11.4.5 of ASCE 7.~~

~~2. In each of the two orthogonal directions, the fundamental period of the structure used to calculate the story drift is less than T_s.~~

~~3. Equation 12.8-2 of ASCE 7 is used to determine the seismic response coefficient, C_s.~~

~~4. The diaphragms are rigid as defined in Section 12.3.1 in ASCE 7 or for diaphragms that are flexible, the distance between vertical elements of the seismic-force-resisting system does not exceed 40 feet (12 192 mm).~~

1613*A*.5.6.2 *(Relocated from 1630A.2.3, 2001 CBC)* **Simplified design procedure.** *Not permitted by OSHPD and DSA-SS*. ~~Where the alternate simplified design procedure of ASCE 7 is used, the seismic design category shall be determined in accordance with ASCE 7.~~

1613*A*.6 Alternatives to ASCE 7. The provisions of Section 1613*A*.6 shall be permitted as alternatives to the relevant provisions of ASCE 7.

1613*A*.6.1 Assumption of flexible diaphragm. Add the following text at the end of Section 12.3.1.1 of ASCE 7:

Diaphragms constructed of wood structural panels or untopped steel decking shall also be permitted to be idealized as flexible, provided all of the following conditions are met:

1. Toppings of concrete or similar materials are not placed over wood structural panel diaphragms except for nonstructural toppings no greater than $1^1/_2$inches (38 mm) thick.

2. Each line of vertical elements of the lateral-force-resisting system complies with the allowable story drift of Table 12.12-1.

3. Vertical elements of the lateral-force-resisting system are light-framed walls sheathed with wood structural panels rated for shear resistance or steel sheets.

4. Portions of wood structural panel diaphragms that cantilever beyond the vertical elements of the lateral-force-resisting system are designed in accordance with Section 2305.2.5 of the ~~*International*~~ *California Building Code*.

1613*A*.6.2 Additional seismic-force-resisting systems for seismically isolated structures. Add the following exception to the end of Section 17.5.4.2 of ASCE 7:

Exception: For isolated structures designed in accordance with this standard, the Structural System Limitations and the Building Height Limitations in Table 12.2-1 for ordinary steel concentrically braced frames (OCBFs) as defined in Chapter 11 and ~~ordinary~~ *intermediate* moment frames ~~(OMFs)~~ *(IMFs)* as

defined in Chapter 11 are permitted to be taken as 160 feet (48 768 mm) for structures assigned to Seismic Design Category D, E or F, provided that the following conditions are satisfied:

1. The value of R_I as defined in Chapter 17 is taken as 1.

2. For ~~OMFs and~~ OCBFs, design is in accordance with AISC 341.

3. For IMFs, design is in accordance with AISC 341. In addition, requirements of Section 9.3 of AISC 341 shall be satisfied.

SECTION 1614A - MODIFICATIONS TO ASCE 7

1614A.1 General. *The text of ASCE 7 shall be modified as indicated in sections 1614A.1.1 through 1614A.1.30.*

1614A.1.1 ASCE 7, Section 11.1. *Modify ASCE 7 Section 11.1 by adding section 11.1.5 as follows:*

11.1.5 Design Criteria Requirements. *Prior to implementation of the non-linear design procedures – the ground motion, analysis and design methods, material assumptions and acceptance criteria proposed by the engineer shall be submitted to the enforcement agency in the form of design criteria for approval.*

The analysis and design basis, conclusion and design decisions shall be reviewed and accepted by enforcement agent.

1614A.1.2 ASCE 7, Section 11.4.7. *Replace ASCE 7 Section 11.4.7 as follows:*

11.4.7 Site-specific ground motion procedures. *The site-specific ground motion procedure set forth in ASCE 7 Section 21 as modified in Section 1802A.6 of this code are permitted to be used to determine ground motion for any structure.*

Unless otherwise approved, the site-specific procedure per ASCE 7 Section 21 as modified by Section 1802A.6 of this code shall be used where any of the following conditions apply:

1) A site response analysis shall be performed per Section 21.1 and a ground motion hazard analysis shall be performed in accordance with Section 21.2 for the following structures:

a) Structure located in Type E soils and mapped MCE spectral acceleration at short periods (S_s) exceeds 2.0g.

b) Structures located in Type F soils.

Exception:

1) Where S_s is less than 0.20g, use of Type E soil profile shall be permitted.

2) Where exception to Section 20.3.1 is applicable except for base isolated buildings.

2) A ground motion hazard analysis shall be performed in accordance with Section 21.2 when:

a) A time history response analysis of the building is performed as part of the design.

b) The building site is located within 10 kilometers of an active fault.

c) For seismically isolated structures and for structures with damping systems.

1614A.1.3 ASCE 7, Table 12.2 -1. *Modify ASCE 7 Table 12.2-1 as follows:*

A. BEARING WALL SYSTEMS

14. Light-framed walls with shear panels of all other materials – Not permitted by OSHPD and DSA-SS.

B. BUILDING FRAME SYSTEMS

4. Ordinary steel concentrically braced frames – Not permitted by OSHPD.

24. Light-framed walls with shear panels of all other materials – Not permitted by OSHPD and DSA-SS.

25. Buckling-restrained braced frames, non-moment-resisting beam-column connections – Not permitted by OSHPD.

27. Special steel plate shear wall – Not permitted by OSHPD.

C. MOMENT RESISTING FRAME SYSTEMS

2. Special steel truss moment frames – Not permitted by OSHPD.

3. Intermediate steel moment frames – Not permitted by OSHPD.

4. Ordinary steel moment frames – Not permitted by OSHPD.

Exception:

1) Systems listed in this section can be used as an alternate system when pre-approved by the enforcement agency.

2) Rooftop or other supported structures not exceeding two stories in height and 10 percent of the total structure weight can use the systems in this section when designed as components per ASCE 7 Chapter 13.

3) Systems listed in this section can be used for seismically isolated buildings when permitted by Section 1613A.6.2.

1614A.1.4 ASCE 7, Section 12.2.3.1. *Modify ASCE 7 Section 12.2.3.1 by adding the following additional requirements for two stage equivalent lateral force procedure:*

(Relocated from 1630A.4.2, 2001 CBC)

~~*2. …. provided that structure complies with the following.*~~

e. Where design of elements of the upper portion is governed by special seismic load combinations, the special loads shall be considered in the design of lower portions.

~~*2.4 The lower portion shall have a stiffness at least 10 times the upper portion.*~~

~~*2.5 The period of the entire structure shall not be greater than 1.1 times the period of the upper portion considered as a separate structural system fixed at the base.*~~

f. The detailing requirements required for the lateral system of the upper portion shall be used for structural components common to the structural system of lower portion.

g. If separate models are used to design the upper and lower portions, the model boundary conditions of the upper portion shall be compatible with actual strength and stiffness of the supporting elements of the lower portion.

h. (Relocated from 1629A.8.3, 2001 CBC) Both flexible upper portion and rigid lower portion considered separately can be classified as being regular.

***Exception**: When dynamic analysis is used regularity requirements in item # h above need not apply.*

1614A.1.5 ASCE 7, Section 12.3.3. *Modify first sentence of ASCE 7 Section 12.3.3.1 as follows:*

(Relocated from 1629A.9.1, 1629A.9.4, 1629A.9.5, 2001 CBC)
12.3.3.1 Prohibited Horizontal and Vetical Irregularities for Seismic Design Categories D through F. *Structures assigned to Seismic Design Category D, E or F having horizontal structural irregularity Type 1b of Table 12.3-1 or vertical structural irregularities Type 1b, 5a or 5b of Table 12.3-2 shall not be permitted.*

1614A.1.6 ASCE 7, Section 12.7.2. *Modify ASCE 7 Section 12.7.2 by adding item 5 to read as follows:*

(Relocated from 1630A.1.1, Item 5, 2001 CBC)
5. Where buildings provide lateral support for walls retaining earth, and the exterior grades on opposite sides of the building differ by more than 6 feet (1829 mm), the load combination of the seismic increment of earth pressure due to earthquake acting on the higher side, as determined by a ~~civil~~ Geotechnical engineer qualified in soils engineering plus the difference in earth pressures shall be added to the lateral forces provided in this section.

1614A.1.7 ASCE 7, Section 12.8.1.1. *Modify ASCE 7 Section 12.8.1.1 by replacing equation 12.8-5 as follows:*

$C_s = 0.03$ *(12.8-5)*

1614A.1.8 ASCE 7, Section 12.8.7. *Modify ASCE 7 Section 12.8.7 by replacing equation 12.8-16 as follows:*

$$\theta = \frac{P_x \Delta I}{V_x h_{sx} C_d} \qquad (12.8\text{-}16)$$

1614A.1.9 ASCE 7, Section 12.9.4. *Replace ASCE 7 Section 12.9.4 as follows:*

(Relocated from 1631A.5.4, 2001 CBC)
12.9.4 Scaling Design Values of Combined Response. *Modal base shear shall not be less than the base shear calculated using the equivalent lateral force procedure of section 12.8, except where the fundamental period exceeds $(C_u)(T_a)$, then $(C_u)(T_a)$ shall be used in lieu of T for fundamental period in calculating equivalent static base shear.*

1614A.1.10 ASCE 7, Section 12.13.1. *Modify ASCE 7 section 12.13.1 by adding Section 12.13.1.1 as follows:*

(Relocated from 1633A.2.12, 2001 CBC)
12.13.1.1 Foundations and superstructure-to-foundation connections. *The foundation shall be capable of transmitting the design base shear and the overturning forces from the structure into the supporting soil.*

In addition, the foundation and the connection of the superstructure elements to the foundation shall have the strength to resist, in addition to gravity loads, the lesser of the following seismic loads:

1. *The strength of the superstructure elements.*

2. *The maximum forces that would occur in the fully yielded structural system.*

3. *~~Qo times the forces in the superstructure elements due to the seismic forces as prescribed in this chapter.~~ Forces from Load Combinations with overstrength factor per ASCE 7 Section 12.4.3.2.*

EXCEPTIONS:

1. Where structures are designed using R ≤ 2.5 such as for inverted pendulum-type structures.

2. When it can be demonstrated that inelastic deformation of the foundation and superstructure-to-foundation connection will not result in a weak story or cause collapse of the structure.

3. Where basic structural system consists of light framed walls with shear panels.

Where the computation of the seismic overturning moment is by the equivalent lateral-force method or the modal analysis method, reduction in overturning moment permitted by section 12.13.4 of ASCE 7 may be used.

Where moment resistance is assumed at the base of the superstructure elements, the rotation and flexural deformation of the foundation as well as deformation of the superstructure-to-foundation connection shall be considered in the drift and deformation compatibility analyses.

Exception: *The seismic loads defined above need not be considered for friction and passive resistance. Ultimate soil pressure can be used when considering load combinations with the seismic loads defined above.*

1614A.1.11 ASCE 7, Section 13.3.2. *Modify ASCE 7 section 13.3.2 by adding the following:*

The seismic relative displacements to be used in design of displacement sensitive nonstructural components is Dp I instead of Dp, where Dp is given by equations 13.3-5 to 13.3-8 and I is the building importance factor given in Section 11.5.

1614.1.12 ASCE 7, Section 13.5.6.2. *Modify ASCE 7, Section 13.5.6.2 by adding Section 13.5.6.2.3 as follows:*

13.5.6.2.3 Additional Requirements

(Relocated from 2501A.5.2, 2001 CBC)

1. ***Exitways.*** *Lay-in ceiling assemblies in exitways of hospitals and essential services buildings shall be installed with a main runner or cross runner surrounding all sides of each piece of tile, board or panel and each light fixture or grille. A cross runner that supports another cross runner shall be considered as a main runner for the purpose of structural classification. Splices or intersections of such runners shall be attached with through connectors such as pop rivets, screws, pins, plates with end tabs or other approved connectors.*

(Relocated from 2501A.5.2, 2001 CBC)

2. ***Corridors and Lobbies.*** *Expansion joints shall be provided in the ceiling at intersections of corridors and at junctions of corridors and lobbies or other similar areas.*

(Relocated from 2501A.5.4.3, 2001 CBC)

3. ***Lay-in panels.*** *Metal panels and panels weighing more than 1/2 pounds per square foot (24 N/m2) other than acoustical tiles shall be positively attached to the ceiling suspension runners.*

(Relocated from 2501A.5.6.1, 2001 CBC)

4. ***Grid members, connectors and expansion devices.*** *The allowable load-carrying capacity as determined by test shall not exceed one third of the mean ultimate test value based on tests of no fewer than three identical specimens. Rational analysis can be substituted for test where permitted by ASCE 7 and enforcement agency.*

(Relocated from 2501A.5.7.1, 2001 CBC)

5. ***Vertical hangers.*** *Each vertical hanger shall be attached to the ceiling suspension member and to the support above with a minimum of three tight twists in 1-1/2 inches.*

(Relocated from 2501A.5.7.2, 2001 CBC)

*6a.**[For OSHPD 1 & 4]** **Lateral force bracing.** Substantiating design calculations or test reports shall be provided for all lateral force bracing, their connections, and anchorages. Lateral forces must comply with the seismic force requirements of ASCE 7, Chapter 13. Horizontal restraint points shall not be placed more than 8 feet X 12 feet (2438 mm X 3658 mm) on centers. Horizontal restraint wires shall be No. 12 gage minimum and secured to main runners with four tight twists in 1-1/2 inches.*

(Relocated from 2501A.5.7.2, 2001 CBC)

*6b.**[For DSA-SS]** **Lateral force bracing.** Substantiating design calculations or test reports shall be provided for all lateral force bracing, their connections, and anchorages. Lateral forces must comply with the seismic force requirements of ASCE 7,Chapter 13. Horizontal restraint points shall not be placed more than 12 feet X 12 feet (3658 mm X 3658 mm) on centers. Horizontal restraint wires shall be No. 12 gage minimum and secured to main runners with four tight twists in 1-1/2 inches.*

(Relocated from 2501A.5.4.2, 2001 CBC)

*7. **Ceiling fixtures.** Fixtures installed in acoustical tile or lay-in panel ceilings shall be mounted in a manner that will not compromise ceiling performance.*

All recessed or drop-in light fixtures and grilles shall be supported directly from the fixture housing to the structure above with a minimum of two 12 gage wires located at diagonally opposite corners. Leveling and positioning of fixtures may be provided by the ceiling grid. Fixture support wires may be slightly loose to allow the fixture to seat in the grid system. Fixtures shall not be supported from main runners or cross runners if the weight of the fixtures causes the total dead load to exceed the deflection capability of the ceiling suspension system.

Fixtures shall not be installed so that the main runners or cross runners will be eccentrically loaded.

Surface-mounted fixtures shall be attached to the main runner with at least two positive clamping devices made of material with a minimum of 14 gage. Rotational spring catches do not comply. A 12 gage suspension wire shall be attached to each clamping device and to the structure above.

(Relocated from 2501A.5.9, 2001 CBC)

*8. **Mechanical services.** Terminals and services weighing no more than 20 pounds (9 kg) shall have two no. 12 gage hangers from the terminal or service to the structure above. These wires may be slack.*

(Relocated from 2501A.5.8, 2001 CBC)

*9. **Lighting fixtures.** All lighting fixtures shall be positively attached to the suspended ceiling system. The attachment device shall have a capacity of 100 percent of the lighting fixture weight acting in any direction.*

Lighting fixtures weighing 56 pounds (25 kg) or more shall be supported directly from the structure above by approved hangers. In such cases the slack wires required by item # 7 above may be omitted.

(Relocated from 2501A.5.10, 2001 CBC)

*10. **Partitions.** Where the suspended ceiling system is required to provide lateral support for the permanent or relocatable partitions, the connection of the partition to the ceiling system, the ceiling system members and their connections, and the lateral force bracing shall be designed to support the reaction force of the partition from prescribed loads applied perpendicular to the face of the partition. These partition reaction forces shall be in addition to the loads described in item #6 above. Partition connectors, the suspended ceiling system and the lateral-force bracing shall all be engineered to suit the individual partition application and shall be shown or defined in the drawings or specifications.*

(Relocated from 2501A.5, 2001 CBC)

11. ***Construction Documents:*** *The construction documents shall include detailing and specifications for suspended ceiling members, connections, support systems, light fixture and mechanical fixture attachments, partition supports and seismic bracing.*

1614A.1.13 ASCE 7, Section 13.6.1. *Modify ASCE 7 section 13.6.1 by adding Sections 13.6.1.1 & 13.6.1.2 as followings:*

13.6.1.1 (Relocated from 1632A.6, 2001 CBC) ***HVAC Ductwork, Plumbing / Piping and Conduit Systems.*** *Ductwork shall be constructed in accordance with provisions contained in Part 4, Title 24, California Mechanical Code. Where possible, pipes, conduit, and their connections shall be constructed of ductile materials (copper, ductile iron, steel or aluminum and brazed, welded or screwed connections). Pipes, conduits and their connections, constructed of nonductile materials (e.g., cast iron, no-hub pipe and plastic), shall have the brace spacing reduced to satisfy requirements of ASCE 7 Section 13 and not to exceed one-half of the spacing allowed for ductile materials.*

13.6.1.2 (Relocated from 1632A.6.1, 2001 CBC) ***Trapeze Assemblies.*** *All trapeze assemblies supporting pipes, ducts and conduit shall be braced to resist the forces and of ~~Section 1632A.2~~ relative displacements per ASCE 7 Section 13, considering the total weight of the elements on the trapeze.*

Pipes, ducts and conduit supported by a trapeze where none of those elements would individually be braced need not be braced if connections to the pipe/conduit/ductwork or directional changes do not restrict the movement of the trapeze. If this flexibility is not provided, bracing will be required when the aggregate weight of the pipes and conduit exceed 10 pounds/feet (146 N/m). The weight shall be determined assuming all pipes and conduit are filled with water.

1614A.1.14 ASCE 7, Section 13.6.10.1. *Modify ASCE 7 Section 13.6.10.1 by adding Section 13.6.10.1.1 as follows:*

(Relocated from 1633A.2.13.1, 2001 CBC)
13.6.10.1.1 ***Elevators guide rail support****. The design of guide rail support-bracket fastenings and the supporting structural framing shall ~~be in accordance with Section 3030 (k), Part 7, Title 24, using~~ use the weight of the counterweight or maximum weight of the car plus not more than 40 percent of its rated load. The seismic forces shall be assumed to be distributed one third to the top guiding members and two thirds to the bottom guiding members of cars and counterweights, unless other substantiating data are provided. In addition to the requirements of ASCE 7 Section 13.6.10.1, the minimum seismic forces shall be 0.5g acting in any horizontal direction ~~using allowable stress design~~.*

1614A.1.15 ASCE 7, Section 13.6.10.4. *Replace ASCE 7, Section 13.6.10.4 as follows:*

(Relocated from 1633A.2.13.1, 2001 CBC)
13.6.10.4 Retainer plates*. ~~Retainer plates are required for both car and counterweight, designed in accordance with Section 3032 (c), Part 7, Title 24, California Code of Regulations.~~ Retainer plates are required at the top and bottom of the car and counterweight, except where safety devices acceptable to the enforcement agency are provided which meet all requirements of the retainer plates, including full engagement of the machined portion of the rail. The design of the car, cab stabilizers, counterweight guide rails and counterweight frames for seismic forces shall be based on the following requirements:*

1. *~~The lateral forces shall be based on horizontal acceleration of 0.5g for all buildings.~~ The seismic force shall be computed per the requirements of ASCE 7 13.6.10.1. The minimum horizontal acceleration shall be 0.5g for all buildings.*

2. *W_p shall equal the weight of the counterweight or the maximum weight of the car plus not less than 40 percent of its rated load.*

3. *With the car or counterweight located in the most adverse position, the stress in the rail shall not exceed the limitations specified in these regulations, nor shall the deflection of the rail relative to its supports exceed the deflection listed below:*

RAIL SIZE (weight per foot of length, pounds)	WIDTH OF MACHINED SURFACE (inches)	ALLOWABLE RAIL DEFLECTION (inches)
8	1 ¼	0.20
11	1 ½	0.30
12	1 ¾	0.40
15	1 31/32	0.50
18 ½	1 31/32	0.50
22 ½	2	0.50
30	2 ¼	0.50

For SI: 1 inch = 25 mm, 1 foot = 305 mm.

NOTE: Deflection limitations are given to maintain a consistent factor of safety against disengagement of retainer plates from the guide rails during an earthquake.

4. *Where guide rails are continuous over supports and rail joints are within 2 feet (610 mm) of their supporting brackets, a simple span may be assumed.*

5. *The use of spreader brackets is allowed.*

6. *Cab stabilizers and counterweight frames shall be designed to withstand computed lateral load ~~equal to~~ with a minimum horizontal acceleration of 0.5g ~~using allowable stress design~~.*

1614A.1.16 ASCE 7, Section 15.4.1. *Modify ASCE 7, Section 15.4.1 by replacing equations 15.4-1 & 15.4-3 as follows:*

$C_s = 0.17$ (15.4-1)
$C_s = 0.06$ (15.4-3)

1614A.1.17 ASCE 7, Section 17.2.1. *Modify ASCE 7, Section 17.2.1 by adding the following:*

(Relocated from 1657A.3, 2001 CBC) The importance factor, I_p, for parts and portions of a seismic-isolated building shall be the same as that required for a fixed-base building of the same occupancy category.

1614A.1.18 ASCE 7 Section 17.2.4.7. *Modify ASCE 7, Section 17.2.4.7 by adding the following:*

(Relocated from 1661A.2.7, 2001 CBC) The effects of uplift and / or rocking shall be explicitly accounted for in the analysis and in the testing of the isolator units.

1614A.1.19 ASCE 7, Section 17.2.4.8. *Modify ASCE 7, Section 17.2.4.8 by adding the following:*

(Relocated from 1661A.2.8, Item #3, 2001 CBC)
f. ~~These~~ Inspection and replacement programs shall be submitted to enforcement agency for approval with the plans and specifications and shall be a condition of occupancy for the structure.

(Relocated from 1661A.2.8, Item #6, 2001 CBC)
g. After every significant seismic event, the owner shall retain a structural engineer to make an inspection of the structural system. The inspection shall consist of viewing the performance of the building, reviewing the strong motion records, and a visual examination of the isolators and their connections for deterioration, offset or physical damage. A report for each inspection, including conclusions on the continuing adequacy of the structural system, shall be submitted as required to the enforcement agency.

1614A.1.20 ASCE 7, Section 17.2.4.9. *Modify ASCE 7, Section 17.2.4 by adding the following:*

(Relocated from 1661A.2.9, 2001 CBC) The quality control testing program shall include provisions for both prototype and production isolator units. Quality control testing program shall be subject to pre-approval by the enforcement agency.

1614A.1.21 ASCE 7, Section 17.2.4.8. *Modify ASCE 7, section 17.2.4.8 by adding section 17.2.4.10 as follows:*

(Relocated from 1661A.2.8,Item # 5, 2001 CBC) ***17.2.4.10 Instrumentation.*** *A proposal for instrumentation and equipment specifications shall be forwarded to the enforcement agency for approval.*

There shall be sufficient numbers of instruments to characterize the response of the building during an earthquake. Motion measuring instruments shall be located within the building and at levels immediately above and below the isolators. The owner of the building is responsible for the implementation of the instrumentation program. Maintenance of the instrumentation and removal and processing of the records shall be the responsibility of the enforcement agency or its designated agent.

1614A.1.22 ASCE 7, Section 17.2.5.2. *Modify ASCE 7, Section 17.2.5.2 by adding the following:*

(Relocated from 1661A.3.2, 2001 CBC) The separation requirements for the building above the isolation system and adjacent buildings shall be the sum of the factored displacements for each building. The factors to be used in determining separations shall be:

~~*For elastic deformations resulting from the dynamic analysis using the Maximum Capable Earthquake unmodified by R_I or .07R times the elastic deformations of an adjacent fixed base structure resulting from an equivalent static analysis.*~~

1. *For seismically isolated buildings, the elastic deformation resulting from the dynamic analyses using the Maximum Capable Earthquake unmodified by R_I.*

2. *For fixed based buildings,C_d times the elastic deformations resulting from an equivalent static analysis using the seismic base shear computed via ASCE 7 Section 12.8.*

1614A.1.23 ASCE 7, Section 17.3.1. *Modify ASCE 7, Section 17.3.1 by the adding following:.*

(Relocated from 1657A.5.3, Item #3, 2001 CBC) Site-specific ground motion spectra of the design-basis earthquake and the maximum considered earthquake, developed in accordance with Section ~~and 1637A~~ 1802A.6 and ASCE 7, shall be used for design and analysis of all seismic-isolated structures when required by Section 1614A.1.2 or ASCE 7.

1614A.1.24 ASCE 7, Section 17.3.2. *Modify ASCE 7, Section 17.3.2 by adding the the following:.*

(Relocated from 1659A.4.2, 2001 CBC) The SRSS of the time history components shall be equal to or greater than the 5 percent damped design spectra ~~at the isolated period T_I, either T_d or T_m~~ between $0.5T_D$ and $1.25T_M$ (where T_D and T_M are defined in ASCE 7 Section 17.5.3).

The duration of the time histories shall be consistent with the magnitude and source characteristics of the design-basis earthquake (or maximum capable earthquake).

~~*Time histories developed for sites with a Near-Source Factor, Na, greater than 1.0 shall incorporate near-source phenomena.*~~

1614A.1.25 ASCE 7, Section 17.4.1. *Modify ASCE 7, Section 17.4.1 by adding the following:.*

(Relocated from 1657A.5.2, 2001 CBC) Equivalent Lateral Force Procedure of Section 17.5 shall be used to establish minimum criteria only, and not be used for design purposes unless these minimum requirements exceed computed force and displacement calculated values from the dynamic analysis.

1614A.1.26 ASCE 7, Section 17.4.2.1. *Modify ASCE 7, Section 17.4.2.1 by adding the following.*

(Relocated from 1657A.5.3, Item # 1.2.3, 2001 CBC)
3. The isolation system has force-deflection properties that are independent of the rate of loading.

(Relocated from 1657A.5.3, Item # 1.2.4, 2001 CBC)

4. The isolation system has force-deflection properties that are independent of the vertical load ~~and~~ or bilateral load imposed on the isolators.

1614A.1.27 ASCE 7, Section 17.4. *Modify ASCE 7, Section 17.4.by adding section 17.4.3 as follows:*

(Relocated from 1657A.5.1.1, 2001 CBC)

17.4.3 Period Separation*. In each principal direction, the fundamental period, T of the superstructure, computed in accordance with ~~Formula (30-10)~~ ASCE 7 Section 12.8.2, assuming that the structure is fixed at the isolation interface, shall not exceed the isolated-structure period,* T_M.

1614A.1.28 ASCE 7, Section 17.4. *Modify ASCE 7, Section 17.7 by adding section 17.7.1 as follows:*

(Relocated from 1664A.1, 2001 CBC)

17.7.1 Design Review. *The design review shall be the responsibility of the enforcement agency. The enforcement agency may at its discretion require the owner of the facility to retain an independent team to review and report ~~on the isolation system design, site conditions and/or building configurations.~~ per Section 17.7. The team shall serve in an advisory capacity to provide technical evaluations to the enforcement agency. The members of the independent team shall be approved by the enforcement agency.*

1614A.1.29 ASCE 7, Section 18.2.4. *Modify ASCE 7, Section 18.2.4, second sentence as follows:*

Regardless of the analysis method used, the peak dynamic response of the structure and elements of the damping system shall be confirmed by using the nonlinear response history procedure.

1614A.1.30 ASCE 7, Section 18.9.2. *Modify ASCE 7, Section 18.9.2 by adding the following:*

Required Tests of Energy Dissipation Devices - Production Tests. *Production testing and associated acceptance criteria shall be as approved by the enforcement agent.*

Notation [For DSA-SS]:
Authority: Education Code Sections 17310, 81142; Health & Safety Code Section 16022
Reference(s): Education Code Sections 17280 - 17317, and 811130 - 81149; Health & Safety Code Sections 16000 – 16023

Notation [For OSHPD]:
Authority: Health and Safety Code Section 129850
Reference: Health and Safety Code Sections 1275,129850 and 129790

CHAPTER 17
STRUCTURAL TESTS AND SPECIAL INSPECTIONS

2001 CBC	PROPOSED ADOPTION	OSHPD		Comments
		2	3	
	Adopt entire chapter without amendments		X	
	Adopt entire chapter with amendments listed below	X		
	Adopt only those sections listed below			
	1702.1	X		
	1704.1	X		
	1704.1.1	X		
1701.5.1.1 CA	*1704.4.2 CA*	X		Relocated existing California Building Standards into IBC format
1701.5.16 CA	*1704.6.2 CA*	X		Relocated existing California Building Standards into IBC format
	1711.1	X		

EXPRESS TERMS

SECTION 1701 GENERAL

1701.1 Scope. The provisions of this chapter shall govern the quality, workmanship and requirements for materials covered. Materials of construction and tests shall conform to the applicable standards listed in this code.

SECTION 1702 DEFINITIONS

1702.1 General. The following words and terms shall, for the purposes of this chapter and as used elsewhere in this code, have the meanings shown herein.

APPROVED AGENCY. An established and recognized agency regularly engaged in conducting tests or furnishing inspection services, when such agency has been approved.

APPROVED FABRICATOR. An established and qualified person, firm or corporation approved by the <<**building official**>> pursuant to Chapter 17 of this code.

CERTIFICATE OF COMPLIANCE. A certificate stating that materials and products meet specified standards or that work was done in compliance with approved construction documents.

DESIGNATED SEISMIC SYSTEM. Those architectural, electrical and mechanical systems and their components that require design in accordance with Chapter 13 of ASCE 7 and for which the component importance factor, I_p, is greater than 1 in accordance with Section 13.1.3 of ASCE 7.

FABRICATED ITEM. Structural, load-bearing or lateral load-resisting assemblies consisting of materials assembled

prior to installation in a building or structure or subjected to operations such as heat treatment, thermal cutting, cold working or reforming after manufacture and prior to installation in a building or structure. Materials produced in accordance with standard specifications referenced by this code, such as rolled structural steel shapes, steel-reinforcing bars, masonry units and wood structural panels shall not be considered "fabricated items."

INSPECTION CERTIFICATE. An identification applied on a product by an approved agency containing the name of the manufacturer, the function and performance characteristics, and the name and identification of an approved agency that indicates that the product or material has been inspected and evaluated by an approved agency (see Section 1703.5 and "Label," "Manufacturer's designation" and "Mark").

LABEL. An identification applied on a product by the manufacturer that contains the name of the manufacturer, the function and performance characteristics of the product or material, and the name and identification of an approved agency and that indicates that the representative sample of the product or material has been tested and evaluated by an approved agency (see Section 1703.5 and "Inspection certificate," "Manufacturer's designation" and "Mark").

MAIN WIND-FORCE-RESISTING SYSTEM. An assemblage of structural elements assigned to provide support and stability for the overall structure. The system generally receives wind loading from more than one surface.

MANUFACTURER'S DESIGNATION. An identification applied on a product by the manufacturer indicating that a product or material complies with a specified standard or set of rules (see also "Inspection certificate," "Label" and "Mark").

MARK. An identification applied on a product by the manufacturer indicating the name of the manufacturer and the function of a product or material (see also "Inspection certificate," "Label" and "Manufacturer's designation").

SPECIAL INSPECTION. Inspection as herein required of the materials, installation, fabrication, erection or placement of components and connections requiring special expertise to ensure compliance with approved construction documents and referenced standards (see Section 1704).

SPECIAL INSPECTION, CONTINUOUS. The full-time observation of work requiring special inspection by an approved special inspector who is present in the area where the work is being performed.

SPECIAL INSPECTION, PERIODIC. The part-time or intermittent observation of work requiring special inspection by an approved special inspector who is present in the area where the work has been or is being performed and at the completion of the work.

SPRAYED FIRE-RESISTANT MATERIALS. Cementitious or fibrous materials that are spray applied to provide fire-resistant protection of the substrates.

STRUCTURAL OBSERVATION. The visual observation of the structural system by a registered design professional for general conformance to the approved construction documents at significant construction stages and at completion of the structural system. Structural observation does not include or waive the responsibility for the inspection required by *Section 109, Appendix Chapter 1*, 1704 or other sections of this code.

Notation [For OSHPD]:
Authority: Health and Safety Code Section 129850
Reference: Health and Safety Code Sections 1275 and 129850

SECTION 1704 SPECIAL INSPECTIONS

1704.1 General. Where application is made for construction as described in this section, the owner or the registered design professional in responsible charge acting as the owner's agent shall employ one or more special inspectors to provide inspections during construction on the types of work listed under Section 1704. The special inspector shall be a qualified person who shall demonstrate competence, to the satisfaction of the <<**building official**>>, for inspection of the particular type of construction or operation requiring special inspection. These inspections are in addition to the inspections specified in *Section 109, Appendix Chapter 1*.

Exceptions:

1. Special inspections are not required for work of a minor nature or as warranted by conditions in the jurisdiction as approved by the <<**building official**>>.
2. Special inspections are not required for building components unless the design involves the practice of professional engineering or architecture as defined by applicable state statutes and regulations governing the professional registration and certification of engineers or architects.
3. Unless otherwise required by the <<**building official**>>, special inspections are not required for occupancies in Group R-3 as applicable in *Section 101.2, Appendix Chapter 1* and occupancies in Group U that are accessory to a residential occupancy including, but not limited to, those listed in Section 312.1.

1704.1.1 Statement of special inspections. The permit applicant shall submit a statement of special inspections prepared by the registered design professional in responsible charge in accordance with *Section 106.1, Appendix Chapter 1* as a condition for permit issuance. This statement shall be in accordance with Section 1705.

Exceptions:
1. A statement of special inspections is not required for structures designed and constructed in accordance with the conventional construction provisions of Section 2308.
2. The statement of special inspections is permitted to be prepared by a qualified person approved by the <<**building official**>> for construction not designed by a registered design professional.

1704.4 Concrete construction. The special inspections and verifications for concrete construction shall be as required by this section and Table 1704.4.

…….

1704.4.2 ***(Relocated from 1701.5.1.1, 2001 CBC)*** ***[For OSHPD 2] Placing Record****. A record shall be kept on the site of the time and date of placing the concrete in each portion of the structure. Such record shall be kept until the completion of the structure and shall be open to the inspection of the enforcement agency.*

…….

1704.6.2 ***(Relocated from 1701.5.16, 2001 CBC)*** ***[For OSHPD 2] Manufactured Trusses and Assemblies.*** *The fabrication of trusses and other assemblages constructed using wood and metal members, or using light metal plate connectors, shall be continuously inspected by a qualified inspector approved by the enforcement agency. The inspector shall furnish the architect, structural engineer and the enforcement agency with a report that the lumber species, grades and moisture content; type of glue, temperature and gluing procedure; type of metal members and metal plate connectors; and the workmanship conform in every material respect with the duly approved plans and specifications. Each inspected truss shall be stamped by the inspector with an identifying mark.*

Notation [For OSHPD]:
Authority: Health and Safety Code Section 129850
Reference: Health and Safety Code Sections 1275 and 129850

SECTION 1711 ALTERNATIVE TEST PROCEDURE

1711.1 General. In the absence of approved rules or other approved standards, the <<**building official**>> shall make, or cause to be made, the necessary tests and investigations; or the <<**building official**>> shall accept duly authenticated reports from approved agencies in respect to the quality and manner of use of new materials or assemblies as provided for in *Section 104.11, Appendix Chapter 1.* The cost of all tests and other investigations required under the provisions of this code shall be borne by the permit applicant.

Notation [For OSHPD]:
Authority: Health and Safety Code Section 129850
Reference: Health and Safety Code Sections 1275 and 129850

Chapter 17*A* - Structural Tests and Special Inspections

2001 CBC	PROPOSED ADOPTION	OSHPD		DSA-SS	Comments
		1	4		
	Adopt entire chapter without amendments				
	Adopt entire chapter with amendments listed below	X	X	X	
	Adopt only those sections listed below				
	1701A.1.1 CA	X	X	X	
	1701A.1.2 CA	X	X	X	
1701A.1.2	*1701A.4 CA*	X	X		Relocated existing California Building Standards into IBC format
1701A.1.1	*1701A.5 CA*			X	Relocated existing California Building Standards into IBC format
	1702A.1	X	X	X	Editorial
	1704A.1	X	X	X	Editorial
	1704A.1.1	X	X	X	
1701A.3.2	*1704A.1.2*	X	X	X	Relocated existing California Building Standards into IBC format
	1704A.2.1	X	X	X	
	Table 1704A.3				Editorial - Heading
2231A.5 CA	*1704A.3.1.1 CA*	X	X	X	Relocated existing California Building Standards into IBC format
2231A.4 CA	*1704A.3.2.1 CA*	X	X	X	Relocated existing California Building Standards into IBC format
2231A.5 CA	*1704A.3.2.2 CA*	X	X	X	Relocated existing California Building Standards into IBC format
2231A.5 CA	*1704A.3.2.3 CA*	X	X	X	Relocate existing California Building Standards into IBC format
	1704A.4	X	X	X	
1701A.5, Item #18 CA	*Table 1704A.4, Item #12*	X	X	X	Relocated existing California Building Standards into IBC format
1929A.12 CA	*1704A.4.2 CA*	X	X	X	Relocated existing California Building Standards into IBC format
1929A.4 CA	*1704A.4.3 CA*	X	X	X	Relocated existing California Building Standards into IBC format
1929A.5 CA	*1704A.4.4 CA*	X	X	X	Relocated existing California Building Standards into IBC format
1929A.9 CA	*1704A.4.5 CA*	X	X	X	Relocated existing California Building Standards into IBC format
1905A.7.1 CA	*1704A.4.6 CA*	X	X	X	Relocated existing California Building Standards into IBC format

1929A.7 CA	*1704A.4.7 CA*	X	X	X	Relocated existing California Building Standards into IBC format
	1704A.5	X	X	X	
	1704A.5.1	X	X	X	
1701A.5.18 CA	*Table 1704A.5.1, Item #7*	X	X	X	Relocated existing California Building Standards into IBC format
	1704A.5.2	X	X	X	
	1704A.5.3	X	X	X	
1701A.5.18 CA	*Table 1704A.5.3, Item #5*	X	X	X	Relocated existing California Building Standards into IBC format
	1704A.6	X	X	X	
	1704A.6.2	X	X	X	
2337A.1 CA	*1704A.6.2.1 CA*	X	X	X	Relocated existing California Building Standards into IBC format
2337A.3 CA	*1704A.6.2.2 CA*	X	X	X	Relocated existing California Building Standards into IBC format
2337A.2 CA	*1704A.6.3 CA*	X	X	X	Relocated existing California Building Standards into IBC format
3301.1 CA	*1704A.7.1 CA*	X	X	X	Relocated existing California Building Standards into IBC format
1809A.6 CA	*1704A.8.1 CA*	X	X	X	Relocated existing California Building Standards into IBC format
1809A.7.1 CA	*1704A.9.1*	X	X	X	Relocated existing California Building Standards into IBC format
1929A.10 CA	*1704A.15 CA*	X	X	X	Relocated existing California Building Standards into IBC format
1929A.11.2 CA	*1704.15.1 CA*	X	X	X	Relocated existing California Building Standards into IBC format
1701A.5.8 CA	*1704A.16 CA*	X	X	X	Relocated existing California Building Standards into IBC format
	1707A.3	X	X	X	
	1707A.7	X	X	X	
	1707A.10	X	X	X	
	1708A.1.1	X	X	X	
	Table 1708A.1.2	X	X	X	
	1708A.1.2	X	X	X	
	1708A.1.3	X	X	X	
	Table 1708A.1.4	X	X	X	
	1708A.1.4	X	X	X	
1702A.2 CA	*1709A.2 CA*	X	X	X	Relocated existing California Building Standards into IBC format
1702A.2 CA	*1709A.3 CA*	X	X	X	Relocated existing California Building Standards into IBC format

	1711A.1 CA	X	X	X	Editorial

REPEAL OF EXISTING CALIFORNIA AMENDMENTS IN PART OR IN WHOLE THAT ARE NO LONGER NECESSARY AS FOLLOWS:

~~2001 CBC SECTION 1701A.2 – Project and Special Inspector~~: Repeal all amendments in this section and all subsections.

~~2001 CBC SECTION 1701A.3 – Duties and responsibilities of Project and Special Inspector~~: Repeal all amendments in this section and all subsections.

~~2001 CBC SECTION 1701A.4 – Standards of Quality:~~ Repeal all amendments in this section.

~~2001 CBC SECTION 1701A.5 – TYPES OF WORK REQUIRING CONSTANT PRESENCE OF THE SPECIAL INSPECTOR:~~ Repeal all amendments in this section.

~~2001 CBC SECTION 1703A – NONDESTRUCTIVE TESTING~~: Repeal all amendments in this section and all subsections.

~~2001 CBC SECTION 1704A – PREFABRICATED CONSTRUCTION~~: Repeal all amendments in this section and all subsections.

EXPRESS TERMS

SECTION 1701*A* - GENERAL

1701*A*.1 Scope. The provisions of this chapter shall govern the quality, workmanship and requirements for materials covered. Materials of construction and tests shall conform to the applicable standards listed in this code.

1701A.1.1 Application *The scope of application of Chapter 17A is as follows:*

1. Structures regulated by the Division of the State Architect-Structural Safety (DSA-SS), which include those applications listed in Section 109.2 These applications include public elementary and secondary schools, community colleges and state-owned or state-leased essential services buildings

2. Structures regulated by the Office of Statewide Health Planning and Development (OSHPD), which include those applications listed in Section 110.1, and 110.4. These applications include hospitals, skilled nursing facilities, intermediate care facilities and correctional treatment centers.

Exception: [For OSHPD 2] *Single-story Type V skilled nursing or intermediate care facilities utilizing wood-frame or light-steel-frame construction as defined in Health and Safety Code Section 129725, which shall comply with CBC Chapter 17 and any applicable amendments therein.*

1701A.1.2 Amendments in this chapter. *DSA - SS and OSHPD adopt this chapter and all amendments.*

Exception: *Amendments adopted by only one agency appear in this chapter preceded with the appropriate acronym of the adopting agency, as follows:*

1. *Division of the State Architect - Structural Safety:*
[DSA-SS] - *For applications listed in Section 109.2*

2. *Office of Statewide Health Planning and Development:*

[OSHPD 1] *- For applications listed in Section 110.1*

[OSHPD 4] *- For applications listed in Section 110.4*

1701*A*.2 New materials. New building materials, equipment, appliances, systems or methods of construction not provided for in this code, and any material of questioned suitability proposed for use in the construction of a building or structure, shall be subjected to the tests prescribed in this chapter and in the approved rules to determine character, quality and limitations of use.

1701*A*.3 Used materials. The use of second-hand materials that meet the minimum requirements of this code for new materials shall be permitted.

1701A.4 *(Relocated from 1701A.1.2, CBC 2001)* ***[For OSHPD 1 and 4]*** *In addition to the ~~project inspector~~ inspector(s) of record required by Title 24, Part 1, Section 7-144, the ~~hospital~~ the owner or the registered design professional in responsible charge acting as the owner's agent shall employ one or more special inspectors who shall provide inspections during construction on the types of work listed under ~~Section 1701A.5,~~ Chapters 17A, 18A, 19A, ~~20A~~ 20, 21A, 22A, ~~23A~~ 23, 25, 34A, and noted in the special test, inspection and observation plan required by Sections 7-141, 7-145 and 7-149 of Title 24, Part 1, of the California Building Standards Administrative Code.*

1701A.5 *(Relocated from 1701A.1.1, CBC 2001)* ***[For DSA-SS]*** *In addition to the ~~project inspector~~ inspector(s) of record required by Title 24, Part 1, Section 4-333, the ~~school district~~ owner or the registered design professional in responsible charge acting as the owner's agent shall employ one or more special inspectors who shall provide inspections during construction on the types of work listed under Chapters 17A, 18A, 19A, 20, 21A, 22A, 23, 25, 34, and noted in the special test, inspection and observation plan required by Sections 4-335 of Title 24, Part 1, of the California Building Standards Administrative Code.*

SECTION 1702*A* - DEFINITIONS

1702*A*.1 General. The following words and terms shall, for the purposes of this chapter and as used elsewhere in this code, have the meanings shown herein.

APPROVED AGENCY. An established and recognized agency regularly engaged in conducting tests or furnishing inspection services, when such agency has been approved.

APPROVED FABRICATOR. An established and qualified person, firm or corporation approved by the building official pursuant to Chapter 17*A* of this code.

CERTIFICATE OF COMPLIANCE. A certificate stating that materials and products meet specified standards or that work was done in compliance with approved construction documents.

DESIGNATED SEISMIC SYSTEM. Those architectural, electrical and mechanical systems and their components that require design in accordance with Chapter 13 of ASCE 7 and for which the component importance factor, I_p, is greater than 1 in accordance with Section 13.1.3 of ASCE 7.

FABRICATED ITEM. Structural, load-bearing or lateral load-resisting assemblies consisting of materials assembled prior to installation in a building or structure or subjected to operations such as heat treatment, thermal cutting, cold working or reforming after manufacture and prior to installation in a building or structure. Materials produced in accordance with standard specifications referenced by this code, such as rolled structural steel shapes, steel-reinforcing bars, masonry units and wood structural panels shall not be considered "fabricated items."

INSPECTION CERTIFICATE. An identification applied on a product by an approved agency containing the name of the manufacturer, the function and performance characteristics, and the name and identification of an approved agency that indicates that the product or material has been inspected and evaluated by an approved agency (see Section 1703*A*.5 and "Label," "Manufacturer's designation" and "Mark").

LABEL. An identification applied on a product by the manufacturer that contains the name of the manufacturer, the function and performance characteristics of the product or material, and the name and identification of an approved agency and that indicates that the representative sample of the product or material has been tested and evaluated by an approved agency (see Section 1703*A*.5 and "Inspection certificate," "Manufacturer's designation" and "Mark").

MAIN WIND-FORCE-RESISTING SYSTEM. An assemblage of structural elements assigned to provide support and stability for the overall structure. The system generally receives wind loading from more than one surface.

MANUFACTURER'S DESIGNATION. An identification applied on a product by the manufacturer indicating that a product or material complies with a specified standard or set of rules (see also "Inspection certificate," "Label" and "Mark").

MARK. An identification applied on a product by the manufacturer indicating the name of the manufacturer and the function of a product or material (see also "Inspection certificate," "Label" and "Manufacturer's designation").

SPECIAL INSPECTION. Inspection as herein required of the materials, installation, fabrication, erection or placement of components and connections requiring special expertise to ensure compliance with approved construction documents and referenced standards (see Section 1704*A*).

SPECIAL INSPECTION, CONTINUOUS. The full-time observation of work requiring special inspection by an approved special inspector who is present in the area where the work is being performed.

SPECIAL INSPECTION, PERIODIC. The part-time or intermittent observation of work requiring special inspection by an approved special inspector who is present in the area where the work has been or is being performed and at the completion of the work.

SPRAYED FIRE-RESISTANT MATERIALS. Cementitious or fibrous materials that are spray applied to provide fire-resistant protection of the substrates.

STRUCTURAL OBSERVATION. The visual observation of the structural system by a registered design professional for general conformance to the approved construction documents at significant construction stages and at completion of the structural system. Structural observation does not include or waive the responsibility for the inspection required by Section 109, *Appendix Chapter 1*, 1704*A* or other sections of this code.

SECTION 1703*A* APPROVALS

1703*A*.1 Approved agency. An approved agency shall provide all information as necessary for the building official to determine that the agency meets the applicable requirements.

1703*A*.1.1 Independent. An approved agency shall be objective and competent. The agency shall also disclose possible conflicts of interest so that objectivity can be confirmed.

1703*A*.1.2 Equipment. An approved agency shall have adequate equipment to perform required tests. The equipment shall be periodically calibrated.

1703*A*.1.3 Personnel. An approved agency shall employ experienced personnel educated in conducting, supervising and evaluating tests and/or inspections.

1703*A*.2 Written approval. Any material, appliance, equipment, system or method of construction meeting the requirements of this code shall be approved in writing after satisfactory completion of the required tests and submission of required test reports.

1703*A*.3 Approved record. For any material, appliance, equipment, system or method of construction that has been approved, a record of such approval, including the conditions and limitations of the approval, shall be kept on file in the building official's office and shall be open to public inspection at appropriate times.

1703*A*.4 Performance. Specific information consisting of test reports conducted by an approved testing agency in accordance with standards referenced in Chapter 35, or other such information as necessary, shall be provided for the building official to determine that the material meets the applicable code requirements.

1703*A*.4.1 Research and investigation. Sufficient technical data shall be submitted to the building official to substantiate the proposed use of any material or assembly. If it is determined that the evidence submitted is satisfactory proof of performance for the use intended, the building official shall approve the use of the material or assembly subject to the requirements of this code. The costs, reports and investigations required under these provisions shall be paid by the permit applicant.

1703*A*.4.2 Research reports. Supporting data, where necessary to assist in the approval of materials or assemblies not specifically provided for in this code, shall consist of valid research reports from approved sources.

1703*A*.5 Labeling. Where materials or assemblies are required by this code to be labeled, such materials and assemblies shall be labeled by an approved agency in accordance with Section 1703*A*. Products and materials required to be labeled shall be labeled in accordance with the procedures set forth in Sections 1703*A*.5.1 through 1703*A*.5.3.

1703*A*.5.1 Testing. An approved agency shall test a representative sample of the product or material being labeled to the relevant standard or standards. The approved agency shall maintain a record of the tests performed. The record shall provide sufficient detail to verify compliance with the test standard.

1703*A*.5.2 Inspection and identification. The approved agency shall periodically perform an inspection, which shall be in-plant if necessary, of the product or material that is to be labeled. The inspection shall verify that the labeled product or material is representative of the product or material tested.

1703*A*.5.3 Label information. The label shall contain the manufacturer's or distributor's identification, model number, serial number or definitive information describing the product or material's performance characteristics and approved agency's identification.

1703*A*.6 Heretofore approved materials. The use of any material already fabricated or of any construction already erected, which conformed to requirements or approvals heretofore in effect, shall be permitted to continue, if not detrimental to life, health or safety to the public.

1703*A*.7 Evaluation and follow-up inspection services. Where structural components or other items regulated by this code are not visible for inspection after completion of a prefabricated assembly, the permit applicant shall submit a report of each prefabricated assembly. The report shall indicate the complete details of the assembly, including a description of the assembly and its components, the basis upon which the assembly is being evaluated, test results and similar information and other data as necessary for the building official to determine conformance to this code. Such a report shall be approved by the building official.

1703*A*.7.1 Follow-up inspection. The permit applicant shall provide for special inspections of fabricated items in accordance with Section 1704*A*.2.

1703*A*.7.2 Test and inspection records. Copies of necessary test and inspection records shall be filed with the building official.

SECTION 1704*A* - SPECIAL INSPECTIONS

1704*A*.1 General. Where application is made for construction as described in this section, the owner or the registered design professional in responsible charge acting as the owner's agent shall employ one or more special inspectors to provide inspections during construction on the types of work listed under Section 1704*A*. The special inspector shall be a qualified person who shall demonstrate competence, to the satisfaction of the building official, for inspection of the particular type of construction or operation requiring special inspection. These inspections are in addition to the inspections specified in Section 109, *Appendix Chapter 1*.

Exceptions:

1. Special inspections are not required for work of a minor nature or as warranted by conditions in the jurisdiction as approved by the building official.

2. Special inspections are not required for building components unless the design involves the practice of professional engineering or architecture as defined by applicable state statutes and regulations governing the professional registration and certification of engineers or architects.

3. Unless otherwise required by the building official, special inspections are not required for occupancies in Group R-3 as applicable in Section 101.2, *Appendix Chapter 1* and occupancies in Group U that are accessory to a residential occupancy including, but not limited to, those listed in Section 312.1.

1704*A*.1.1 Statement of special inspections. The permit applicant shall submit a statement of special inspections prepared by the registered design professional in responsible charge in accordance with Section 106.1, *Appendix Chapter 1* as a condition for permit issuance. This statement shall be in accordance with Section 1705*A*.

Exceptions:

1. *Not permitted by OSHPD and DSA-SS*. ~~A statement of special inspections is not required for structures designed and constructed in accordance with the conventional construction provisions of Section 2308.~~

2. The statement of special inspections is permitted to be prepared by a qualified person approved by the building official for construction not designed by a registered design professional.

1704*A*.1.2 Report requirement. *(Relocated from 1701A.3.2, CBC 2001)* *The inspector(s) of record and special* ~~Special~~ inspectors shall keep records of inspections. The *inspector of record and* special inspector shall furnish inspection reports to the building official and to the registered design professional in responsible charge *as required by Title 24, Part 1.* Reports shall indicate that work inspected was done in conformance to approved construction documents *as required by Title 24 Parts 1 and 2*. Discrepancies shall be brought to the immediate attention of the contractor for correction. If the discrepancies are not corrected, the discrepancies shall be brought to the attention of the building official and to the registered design professional in responsible charge prior to the completion of that phase of the work. A final report documenting required special inspections and correction of any discrepancies noted in the inspections shall be submitted at a point in time agreed upon by the permit applicant and the building official prior to the start of work.

1704*A*.2 Inspection of fabricators. Where fabrication of structural load-bearing members and assemblies is being performed on the premises of a fabricator's shop, special inspection of the fabricated items shall be required by this section and as required elsewhere in this code.

1704*A*.2.1 Fabrication and implementation procedures. The special inspector shall verify that the fabricator maintains detailed fabrication and quality control procedures that provide a basis for inspection control of the workmanship and the fabricator's ability to conform to approved construction documents and referenced standards. The special inspector shall review the procedures for completeness and adequacy relative to the code requirements for the fabricator's scope of work.

Exception: Special inspections as required by Section 1704*A*.2 shall not be required where the fabricator is approved in accordance with Section 1704*A*.2.2 *except as required by Sections 1704A.3, 1704A.4 and 1704A.6.*

1704*A*.2.2 Fabricator approval. Special inspections required by this code are not required where the work is done on the premises of a fabricator registered and approved to perform such work without special inspection. Approval shall be based upon review of the fabricator's written procedural and quality control manuals and periodic auditing of fabrication practices by an approved special inspection agency. At completion of fabrication, the approved fabricator shall submit a certificate of compliance to the building official stating that the work was performed in accordance with the approved construction documents.

1704*A*.3 Steel construction. The special inspections for steel elements of buildings and structures shall be as required by Section 1704*A*.3 and Table 1704*A*.3.

Exceptions:

1. Special inspection of the steel fabrication process shall not be required where the fabricator does not perform any welding, thermal cutting or heating operation of any kind as part of the fabrication process. In such cases, the fabricator shall be required to submit a detailed procedure for material control that demonstrates the fabricator's ability to maintain suitable records and procedures such that, at any time during the fabrication process, the material specification, grade and mill test reports for the main stress-carrying elements are capable of being determined.

2. The special inspector need not be continuously present during welding of the following items, provided the materials, welding procedures and qualifications of welders are verified prior to the start of the work; periodic inspections are made of the work in progress; and a visual inspection of all welds is made prior to completion or prior to shipment of shop welding.

   2.1. Single-pass fillet welds not exceeding $^{5}/_{16}$ inch (7.9 mm) in size.

   2.2. Floor and roof deck welding.

   2.3. Welded studs when used for structural diaphragm.

2.4. Welded sheet steel for cold-formed steel framing members such as studs and joists.

2.5. Welding of stairs and railing systems.

TABLE 1704*A*.3 - REQUIRED VERIFICATION AND INSPECTION OF STEEL CONSTRUCTION

VERIFICATION AND INSPECTION	CONTINUOUS	PERIODIC	REFERENCED STANDARD[a]	~~IBC~~ *CBC* REFERENCE
1. Material verification of high-strength bolts, nuts and washers:				
a. Identification markings to conform to ASTM standards specified in the approved construction documents.	—	X	Applicable ASTM material specifications; AISC 360, Section A3.3	—
b. Manufacturer's certificate of compliance required.	—	X	—	—
2. Inspection of high-strength bolting:				
a. Bearing-type connections.	—	X	AISC 360, Section M2.5	1704*A*.3.3
b. Slip-critical connections.	X	X		
3. Material verification of structural steel:				
a. Identification markings to conform to ASTM standards specified in the approved construction documents.	—	—	ASTM A 6 or ASTM A 568	1708*A*.4
b. Manufacturers' certified mill test reports.	—	—	ASTM A 6 or ASTM A 568	
4. Material verification of weld filler materials:				
a. Identification markings to conform to AWS specification in the approved construction documents.	—	—	AISC 360, Section A3.5	—
b. Manufacturer's certificate of compliance required.	—	—	—	—
5. Inspection of welding: a. Structural steel:	—	—		
1) Complete and partial penetration groove welds.	X	—	AWS D1.1	1704*A*.3.1
2) Multipass fillet welds.	X	—		
3) Single-pass fillet welds > $^5/_{16}''$	X	—		
4) Single-pass fillet welds ≤ $^5/_{16}''$	—	X		
5) Floor and roof deck welds.	—	X	AWS D1.3	—
b. Reinforcing steel:	—	—	AWS D1.4 ACI 318: 3.5.2	—
1) Verification of weldability of reinforcing steel other than ASTM A 706.	—	X		
2) Reinforcing steel-resisting flexural and axial forces in intermediate and special moment frames, and boundary elements of	X	—		

special reinforced concrete shear walls and shear reinforcement.				
3) Shear reinforcement.	X	—		
4) Other reinforcing steel.	—	X		
6. Inspection of steel frame joint details for compliance with approved construction documents: a. Details such as bracing and stiffening. b. Member locations. c. Application of joint details at each connection.	 — — —	X — —	—	1704A.3.2

For SI: 1 inch = 25.4 mm.

a. Where applicable, see also Section 1707A.1, Special inspection for seismic resistance.

1704A.3.1 Welding. Welding inspection shall be in compliance with AWS D1.1. The basis for welding inspector qualification shall be AWS D1.1.

1704A.3.1.1 *(Relocated from 2231A.5, CBC 2001)* ***Inspection of Welding.*** *Inspection of all shop and field welding operations, including the installation of automatic end-welded stud shear connectors shall be made by a qualified welding inspector approved by the enforcement agency. Such inspector shall be a person trained and thoroughly experienced in inspecting welding operations. The inspector's ability to distinguish between sound and unsound welding shall be reliably established. The minimum requirements for a qualified welding inspector shall be as those for an AWS certified welding inspector (CWI), as defined in the provisions of the AWS QC1~~–1-96, Standard for AWS Certification of Welding Inspectors published by the American Welding Society~~. All welding inspectors shall be as approved by the enforcement agency.*

The ability of each welder to produce sound welds of all types required by the work shall be established by welder qualification satisfactory to the enforcement agency.

Welding inspection of structural welding shall conform to the requirements of AWS D1.1 ~~Structural Welding Code. Steel, 1998 edition, published by the American Welding Society~~, except as modified by this section.

Welding inspection of cold-formed steel members shall conform to the requirements of AWS D1.3.

The welding inspector shall make a systematic record of all welds. This record shall include in addition to other required records:

1. Identification marks of welders.

2. List of defective welds.

3. Manner of correction of defects.

The welding inspector shall check the material, equipment, details of construction and procedure, as well as the welds. The inspector shall also check the ability of the welder. The inspector shall verify that the installation procedure for automatic end-welded stud shear connectors is in accordance with the requirements of AWS D1.1~~, Structural Welding Code. Steel, 1998 edition, published by the American Welding Society~~ and the approved plans and specifications. The inspector shall furnish the architect, structural engineer and the enforcement agency with a verified report that the welding is proper and has been done in conformity with AWSD1.1 ~~, Structural Welding Code. Steel, 1998 edition, published by the American Welding Society~~ and the approved

plans and specifications. The inspector shall use all means necessary to determine the quality of the weld. The inspector may use gamma ray, magnaflux, trepanning, sonics or any other aid to visual inspection which the inspector may deem necessary to be assured of the adequacy of the welding.

> ~~***EXCEPTION:*** *Plant welding inspection of open-web steel joists may be waived with the approval of the enforcement agency where welding inspection is provided at the jobsite.*~~

1704*A*.3.2 Details. The special inspector shall perform an inspection of the steel frame to verify compliance with the details shown on the approved construction documents, such as bracing, stiffening, member locations and proper application of joint details at each connection.

1704A.3.2.1 *(Relocated from 2231A.4, CBC 2001)* ***Inspection of Shop Fabrication.*** *Inspection of shop fabrication shall be required for significant structural detailed connection and fabrication work as directed by the enforcement agency. This inspection shall be made by a qualified inspector approved by the enforcement agency. The inspector shall furnish the architect, structural engineer and the enforcement agency with a report that the materials and workmanship conform to the approved plans and specifications.*

~~*[For OSHPD 1 & 4] When welds from web doubler plates or continuity plates occur in the k-area of rolled steel columns, the k-area adjacent to the welds shall be inspected after fabrication as required by the enforcement agency, using approved nondestructive methods conforming to AWS D1.1. The k-area is defined in wide flange shapes to be the area of the web immediately adjacent to the flange, extending from the fillet to a point approximately 1 1/2 inches beyond the point of tangency between the fillet and the web.*~~

1704A.3.2.2 *(Relocated from 2231A.5, CBC 2001)* ***Steel Joist and Joist Girder Inspection.*** *Special inspection is required during the manufacture and welding of steel joists or joist girders. The special inspector shall verify that proper quality control procedures and tests have been employed for all materials and the manufacturing process, and shall perform visual inspection of the finished product. The special inspector shall place a distinguishing mark, and/or tag with this distinguishing mark, on each inspected joist or joist girder. This mark or tag shall remain on the joist or joist girder throughout the job site receiving and erection process.*

1704A.3.2.3 *(Relocated from 2231A.5, CBC 2001)* ***Light-Framed Steel Truss Inspection.*** *The manufacture of cold-formed light framed steel trusses shall be continuously inspected by a qualified special inspector approved by the enforcement agency. The special inspector shall verify conformance of materials and manufacture with approved plans and specifications. The special inspector shall place a distinguishing mark, and/or tag with this distinguishing mark, on each inspected truss. This mark or tag shall remain on the truss throughout the job site receiving and erection process.*

1704*A*.3.3 High-strength bolts. Installation of high-strength bolts shall be periodically inspected in accordance with AISC specifications.

1704*A*.3.3.1 General. While the work is in progress, the special inspector shall determine that the requirements for bolts, nuts, washers and paint; bolted parts and installation and tightening in such standards are met. For bolts requiring pretensioning, the special inspector shall observe the preinstallation testing and calibration procedures when such procedures are required by the installation method or by project plans or specifications; determine that all plies of connected materials have been drawn together and properly snugged and monitor the installation of bolts to verify that the selected procedure for installation is properly used to tighten bolts. For joints required to be tightened only to the snug-tight condition, the special inspector need only verify that the connected materials have been drawn together and properly snugged.

1704*A*.3.3.2 Periodic monitoring. Monitoring of bolt installation for pretensioning is permitted to be performed on a periodic basis when using the turn-of-nut method with matchmarking techniques, the direct tension indicator method or the alternate design fastener (twist-off bolt) method. Joints designated as snug tight need be inspected only on a periodic basis.

1704*A*.3.3.3 Continuous monitoring. Monitoring of bolt installation for pretensioning using the calibrated wrench method or the turn-of-nut method without matchmarking shall be performed on a continuous basis.

1704*A*.4 Concrete construction. The special inspections and verifications for concrete construction shall be as required by this section and Table 1704*A*.4.

Exception: *Not permitted by OSHPD and DSA-SS*. ~~Special inspections shall not be required for:~~

~~1. Isolated spread concrete footings of buildings three stories or less in height that are fully supported on earth or rock.~~

~~2. Continuous concrete footings supporting walls of buildings three stories or less in height that are fully supported on earth or rock where:~~

~~2.1. The footings support walls of light-frame construction;~~

~~2.2. The footings are designed in accordance with Table 1805.4.2; or~~

~~2.3. The structural design of the footing is based on a specified compressive strength,f'c, no greater than 2,500 pounds per square inch (psi) (17.2 MPa), regardless of the compressive strength specified in the construction documents or used in the footing construction.~~

~~3. Nonstructural concrete slabs supported directly on the ground, including prestressed slabs on grade, where the effective prestress in the concrete is less than 150 psi (1.03 MPa).~~

~~4. Concrete foundation walls constructed in accordance with Table 1805.5(5).~~

~~5. Concrete patios, driveways and sidewalks, on grade.~~

TABLE 1704*A*.4 - REQUIRED VERIFICATION AND INSPECTION OF CONCRETE CONSTRUCTION

VERIFICATION AND INSPECTION	CONTINUOUS	PERIODIC	REFERENCED STANDARD[a]	~~IBC~~ *CBC* REFERENCE
1. Inspection of reinforcing steel, including prestressing tendons, and placement.	—	X	ACI 318: 3.5, 7.1-7.7	1913*A*.*4*
2. Inspection of reinforcing steel welding in accordance with Table 1704*A*.3, Item 5b.	—	—	AWS D1.4 ACI 318: 3.5.2	—
3. Inspect bolts to be installed in concrete prior to and during placement of concrete where allowable loads have been increased.	X	—	—	1911*A*.5
4. Verifying use of required design mix.	—	X	ACI 318: Ch. 4, 5.2-5.4	1904*A*.*2*.2, 1913*A*.2, 1913*A*.3
5. At the time fresh concrete is sampled to fabricate specimens for strength tests, perform slump and air content tests, and determine the temperature of the concrete.	X	—	ASTM C 172 ASTM C 31 ACI 318: 5.6, 5.8	1913*A*.10
6. Inspection of concrete and shotcrete placement for proper application techniques.	X	—	ACI 318: 5.9, 5.10	1913*A*.6, 1913*A*.7, *1913A*.8
7. Inspection for maintenance of specified curing temperature and techniques.	—	X	ACI 318: 5.11-5.13	1913*A*.9
8. Inspection of prestressed concrete:	X	—	ACI 318: 18.20	—

a. Application of prestressing forces. b. Grouting of bonded prestressing tendons in the seismic-force-resisting system.	X		ACI 318: 18.18.4	
9. Erection of precast concrete members.	—	X	ACI 318: Ch. 16	—
10. Verification of in-situ concrete strength, prior to stressing of tendons in posttensioned concrete and prior to removal of shores and forms from beams and structural slabs.	—	X	ACI 318: 6.2	—
11. Inspect formwork for shape, location and dimensions of the concrete member being formed.	—	X	ACI 318: 6.1.1	—
12. (Relocated from 1701A. 5, Item 18, CBC 2001) Post-Installed Anchors.	*X*	—	—	—

For SI: 1 inch = 25.4 mm.

a. Where applicable, see also Section 1707*A*.1, Special inspection for seismic resistance.

1704*A*.4.1 Materials. In the absence of sufficient data or documentation providing evidence of conformance to quality standards for materials in Chapter 3 of ACI 318, the building official shall require testing of materials in accordance with the appropriate standards and criteria for the material in Chapter 3 of ACI 318. Weldability of reinforcement, except that which conforms to ASTM A 706, shall be determined in accordance with the requirements of Section 3.5.2 of ACI 318.

1704A.4.2 *(Relocated from 1929A.12, CBC 2001)* ***Inspection of Welded Reinforcing Bars.*** *Inspection of all shop and field structural welding operations shall be made by a qualified welding inspector approved by the enforcement agency. Such inspector shall be trained and thoroughly experienced in inspecting reinforcing bar welding operations. The inspector's ability to distinguish between sound and unsound welding shall be reliably established.*

The welding inspector shall make a systematic record of all welds. This record shall include:

1. Identification marks of welders.

2. List of defective welds.

3. Manner of correction of defects.

The welding inspector shall check the material, equipment, details of construction, and procedures as well as the welds. The inspector shall also check the ability of the welder. The welding inspector shall furnish the architect, structural engineer and the enforcement agency with a verified report that the welding which is required to be inspected is proper and has been done in conformity with the approved plans and specifications. The welding inspector shall use all means necessary to determine the quality of the weld. The inspector may use gamma ray, magnaflux, trepanning, sonics or any other aid to visual inspection which the inspector may deem necessary to assure the adequacy of the welding.

1704A.4.3 *(Relocated from 1929A.4, CBC 2001)* ***Batch Plant Inspection.*** *Except as provided under Section ~~1929A.5~~ 1704A.4.4, the quality and quantity of materials used in transit-mixed concrete and in batched aggregates shall be continuously inspected at the location where materials are measured by an approved special inspector.*

1704A.4.4 *(Relocated from 1929A.5, CBC 2001)* ***Waiver of Batch Plant Inspection.*** *Batch plant inspection may be waived under either of the following conditions:*

1. The concrete plant complies fully with the requirements of ASTM C 94, Sections 8 and 9, and has a current certificate from the National Ready Mixed Concrete Association or another agency acceptable to the enforcement agency. The certification shall indicate that the plant has automatic batching and recording capabilities.

2. For one-story wood-frame or one-story light-steel buildings and isolated mat-type foundations supporting equipment only, where the specified compressive strength f_c of the concrete delivered to the jobsite is 3,500 psi (24.13 MPa) and where the f'_c used in design is not greater than 2,500 psi (17.24 MPa).

When batch plant inspection is waived, the following requirements shall apply and shall be described in the contract specifications:

Approved inspector of the testing laboratory shall check the first batching at the start of work and furnish mix proportions to the licensed weighmaster.

Licensed weighmaster to positively identify materials as to quantity and certify to each load by a ticket.

Tickets shall be transmitted to the project inspector by a truck driver with load identified thereon. Inspector will not accept the load without a load ticket identifying the mix and will keep a daily record of placements, identifying each truck, its load and time of receipt, and approximate location of deposit in the structure and will transmit a copy of the daily record to the enforcement agency.

At the end of the project, the weighmaster shall furnish an affidavit to the enforcement agency ~~on Form SSS 411-8~~ certifying that all concrete furnished conforms in every particular to proportions established by mix designs.

1704A.4.5 *(Relocated from 1929A.9, CBC 2001)* ***Inspection of Prestressed Concrete.***

1704A.4.5.1 *In addition to the general inspection required for concrete work, all plant fabrication of prestressed concrete members or tensioning of posttensioned members constructed at the site shall be continuously inspected by an inspector specially approved for this purpose by the enforcement agency.*

1704A.4.5.2 *To be eligible for approval, the inspector shall be examined as to his or her knowledge and experience in prestressed concrete construction.*

1704A.4.5.3 *The prestressed concrete plant fabrication inspector shall check the materials, equipment, tensioning procedure and construction of the prestressed members. The inspector shall make a verified report identifying the members by mark and shall include such pertinent data as lot numbers of tendons used, tendon jacking forces, age and strength of concrete at time of tendon release and such other information that may be required.*

1704A.4.5.4 *The inspector of prestressed members posttensioned at the site shall check the condition of the prestressing tendons, anchorage assemblies and concrete in the area of the anchorage, the tensioning equipment and the tensioning procedure. The inspector shall make a verified report of the prestressing operation identifying the members or tendons by mark and including such pertinent data as the initial cable slack, net elongation of tendons, jacking force developed, and such other information as may be required.*

1704A.4.5.5 *The verified reports of construction shall show that of the inspector's own personal knowledge, the work covered by the report has been performed and materials used and installed in every material respect in compliance with the duly approved plans and specifications for plant fabrication inspection. The verified report shall be accompanied by test reports required for materials used. For site posttensioning inspections the verified report shall be accompanied by copies of calibration charts, certified by an approved testing laboratory, showing the relationship between gage readings and force applied by the jacks used in the prestressing procedure*

1704A.4.6 *(Relocated from 1905A.7.1, Item #8, CBC 2001)* ***Concrete Pre-Placement Inspection.*** *Concrete shall not be placed until the forms and reinforcement have been inspected, all preparations for*

the placement have been completed, and the preparations have been checked by the inspector of Record and Special Inspector, all subject to the observation of the structural engineer or architect.

1704A.4.7 *(Relocated from 1929A.7, CBC 2001)* ***Placing Record.*** *A record shall be kept on the site of the time and date of placing the concrete in each portion of the structure. Such record shall be kept until the completion of the structure and shall be open to the inspection of the enforcement agency.*

1704*A*.5 Masonry construction. Masonry construction shall be inspected and evaluated in accordance with the requirements of Sections 1704*A*.5.1 through 1704*A*.5.3, depending on the classification of the building or structure or nature of the occupancy, as defined by this code.

Exception: *Not permitted by OSHPD and DSA-SS*. ~~Special inspections shall not be required for:~~

~~1. Empirically designed masonry, glass unit masonry or masonry veneer designed by Section 2109, 2110 or Chapter 14, respectively, or by Chapter 5, 7 or 6 of ACI 530/ASCE 5/TMS 402, respectively, when they are part of structures classified as Occupancy Category I, II or III in accordance with Section 1604.5.~~

~~2. Masonry foundation walls constructed in accordance with Table 1805.5(1), 1805.5(2), 1805.5(3) or 1805.5(4).~~

~~3. Masonry fireplaces, masonry heaters or masonry chimneys installed or constructed in accordance with Section 2111, 2112 or 2113, respectively.~~

1704*A*.5.1 ~~Empirically designed masonry,glass~~ ***Glass*** **unit masonry and masonry veneer in Occupancy Category *II, III or* IV.** The minimum special inspection program for ~~empirically designed masonry,~~ glass unit masonry or masonry veneer designed by ~~Section 2109, 2110 or~~ Chapter *21A or* 14, ~~respectively,~~ or by Chapter ~~5, 7 or~~ 6 of ACI 530/ASCE 5/TMS 402~~, respectively~~, in structures classified as Occupancy Category *II, III or* IV, in accordance with Section 1604*A*.5, shall comply with Table 1704*A*.5.1.

TABLE 1704*A*.5.1 - LEVEL 1 SPECIAL INSPECTION

INSPECTION TASK	FREQUENCY OF INSPECTION		REFERENCE FOR CRITERIA		
	Continuous during task listed	Periodically during task listed	~~IBC~~ *CBC* section	ACI 530/ASCE 5/TMS 402[a]	ACI 530.1/ASCE 6/TMS 602[a]
1. As masonry construction begins, the following shall be verified to ensure compliance:					
a. Proportions of site-prepared mortar.	—	X	—	—	Art. 2.6A
b. Construction of mortar joints.	—	X	—	—	Art. 3.3B
c. Location of reinforcement, connectors, prestressing tendons and anchorages.	—	X	—	—	Art. 3.4, 3.6A
d. Prestressing technique.	—	X	—	—	Art. 3.6B
e. Grade and size of prestressing tendons and anchorages.	—	X	—	—	Art. 2.4B, 2.4H
2. The inspection program shall verify:					
a. Size and location of structural elements.	—	X	—	—	Art. 3.3G
b. Type, size and location of anchors, including other details of anchorage of masonry to structural members, frames or other construction.	—	X	—	Sec. 1.2.2(e), 2.1.4, 3.1.6	—
c. Specified size, grade and type of reinforcement.	—	X	—	Sec. 1.13	Art. 2.4, 3.4
d. Welding of reinforcing bars.	X	—	—	Sec. 2.1.10.7.2, 3.3.3.4(b)	—
e. Protection of masonry during cold weather (temperature below 40°F) or hot weather (temperature above 90°F).	—	X	Sec. 2104*A*.3, 2104*A*.4	—	Art. 1.8C, 1.8D
f. Application and measurement of prestressing force.	—	X	—	—	Art. 3.6B

3. Prior to grouting, the following shall be verified to ensure compliance:					
a. Grout space is clean.	—	X	—	—	Art. 3.2D
b. Placement of reinforcement and connectors and prestressing tendons and anchorages.	—	X	—	Sec. 1.13	Art. 3.4
c. Proportions of site-prepared grout and prestressing grout for bonded tendons.	—	X	—	—	Art. 2.6B
d. Construction of mortar joints.	—	X	—	—	Art. 3.3B
4. Grout placement shall be verified to ensure compliance with code and construction document provisions.	X	—	—	—	Art 3.5
a. Grouting of prestressing bonded tendons.	X	—	—	—	Art. 3.6C
5. Preparation of any required grout specimens, mortar specimens and/or prisms shall be observed.	X	—	Sec. 2105A.2.2, 2105A.3	—	Art. 1.4
6. Compliance with required inspection provisions of the construction documents and the approved submittals shall be verified.	—	X	—	—	Art. 1.5
7. *(Relocated from 1701A.5 Item #18, CBC 2001) Post-Installed Anchors.*	X	—	—	—	—

For SI: °C = (°F - 32)/1.8.

a. The specific standards referenced are those listed in Chapter 35.

1704A.5.2 Engineered masonry in Occupancy Category I~~, II or III~~. The minimum special inspection program for masonry designed by Section 2107A or 2108A or by chapters other than ~~Chapter~~ Chapters ~~5,~~ 6 ~~or 7~~ of ACI 530/ASCE 5/TMS 402 in structures classified as Occupancy Category I ~~, II or III,~~ in accordance with Section 1604A.5, shall comply with Table 1704A.5.1.

1704A.5.3 Engineered masonry in Occupancy Category *II, III or* IV. The minimum special inspection program for masonry designed by Section 2107A or 2108A or by chapters other than ~~Chapter~~ Chapters ~~5,~~ 6 ~~or 7~~ of ACI 530/ASCE 5/TMS 402 in structures classified as Occupancy Category *II, III or* IV, in accordance with Section 1604A.5, shall comply with Table 1704A.5.3.

TABLE 1704A.5.3 - LEVEL 2 SPECIAL INSPECTION

INSPECTION TASK	FREQUENCY OF INSPECTION		REFERENCE FOR CRITERIA		
	Continuous during task listed	Periodically during task listed	~~IBC~~ *CBC* section	ACI 530/ ASCE 5/ TMS 402[a]	ACI 530.1/ ASCE 6/ TMS 602[a]
1. From the beginning of masonry construction, the following shall be verified to ensure compliance:					
a. Proportions of site-prepared mortar, grout and prestressing grout for bonded tendons.	—	X	—	—	Art. 2.6A
b. Placement of masonry units and construction of mortar joints.	—	X	—	—	Art. 3.3B
c. Placement of reinforcement, connectors and prestressing tendons and anchorages.	—	X	—	Sec. 1.13	Art. 3.4, 3.6A
d. Grout space prior to grouting.	X	—	—	—	Art. 3.2D
e. Placement of grout.	X	—	—	—	Art. 3.5
f. Placement of prestressing grout.	X	—	—	—	Art. 3.6C

2. The inspection program shall verify:					
a. Size and location of structural elements.	—	X	—	—	Art. 3.3G
b. Type, size and location of anchors, including other details of anchorage of masonry to structural members, frames or other construction.	X	—	—	Sec. 1.2.2(e), 2.1.4, 3.1.6	—
c. Specified size, grade and type of reinforcement.		X	—	Sec. 1.13	Art. 2.4, 3.4
d. Welding of reinforcing bars.	X	—	—	Sec. 2.1.10.7.2, 3.3.3.4(b)	—
e. Protection of masonry during cold weather (temperature below 40°F) or hot weather (temperature above 90°F).	—	X	Sec. 2104*A*.3, 2104*A*.4	—	Art. 1.8C, 1.8D
f. Application and measurement of prestressing force.	X	—	—	—	Art. 3.6B
3. Preparation of any required grout specimens, mortar specimens and/or prisms shall be observed.	X	—	Sec. 2105*A*.2.2, 2105*A*.3	—	Art. 1.4
4. Compliance with required inspection provisions of the construction documents and the approved submittals shall be verified.	—	X	—	—	Art. 1.5
5. (Relocated from 1701A.5 Item #18, CBC 2001) Post-Installed Anchors.	*X*	—	—	—	—

For SI: °C = (°F - 32)/1.8.

a. The specific standards referenced are those listed in Chapter 35.

1704*A*.6 Wood construction. Special inspections of the fabrication process of prefabricated wood structural elements and assemblies shall be in accordance with Section 1704*A*.2 *except as modified in this section*. Special inspections of site *and shop* built assemblies shall be in accordance with this section.

1704*A*.6.1 High-load diaphragms. High-load diaphragms designed in accordance with Table 2306.3.2 shall be installed with special inspections as indicated in Section 1704*A*.1. The special inspector shall inspect the wood structural panel sheathing to ascertain whether it is of the grade and thickness shown on the approved building plans. Additionally, the special inspector must verify the nominal size of framing members at adjoining panel edges, the nail or staple diameter and length, the number of fastener lines and that the spacing between fasteners in each line and at edge margins agrees with the approved building plans.

1704A.6.2 Wood Structural Elements and Assemblies. *Special inspection of wood structural elements and assemblies is required, as specified in this section, to ensure conformance with approved drawings and specifications, and applicable standards*

The special inspector shall furnish a verified report to the design professional in general responsible charge of construction observation, the structural engineer, and the enforcement agency, in accordance with Title 24, Part 1 and this chapter. The verified report shall list all inspected members or trusses, and shall indicate whether or not the inspected members or trusses conform with applicable standards and the approved drawings and specifications. Any non-conforming items shall be indicated on the verified report.

1704A.6.2.1 *(Relocated from 2337A.1, CBC 2001)* ***Structural Glued- Laminated Timber.*** *Manufacture of all structural glued laminated timber shall be continuously inspected by a qualified special inspector approved by the enforcement agency.*

The special inspector shall verify that proper quality control procedures and tests have been employed for all materials and the manufacturing process, and shall perform visual inspection of the finished product. Each inspected member shall be stamped by the special inspector with an identification mark.

Exception: *Special Inspection is not required for non-custom members of 5-1/8 inch maximum width and 18 inch maximum depth, and with a maximum clear span of 32 feet, manufactured and marked in accordance with ANSI/AITC A 190.1 Section 6.1.1 for non-custom members.*

1704A.6.2.2 *(Relocated from 2337A.3, CBC 2001)* ***Manufactured open web trusses.*** *The manufacture of open web trusses shall be continuously inspected by a qualified special inspector approved by the enforcement agency.*

The special inspector shall verify that proper quality control procedures and tests have been employed for all materials and the manufacturing process, and shall perform visual inspection of the finished product. Each inspected truss shall be stamped with an identification mark by the special inspector.

1704A.6.3 *(Relocated from 2337A.2, CBC 2001)* ***Timber Connectors.*** *The installation of all timber connectors shall be continuously inspected by a qualified inspector approved by the enforcement agency. The inspector shall furnish the architect, structural engineer and the enforcement agency with a report duly verified by him that the materials, timber connectors and workmanship conform to the approved plans and specifications.*

1704*A*.7 Soils. Special inspections for existing site soil conditions, fill placement and load-bearing requirements shall be as required by this section and Table 1704*A*.7. The approved soils report, required by Section 1802*A*.2, and the documents prepared by the registered design professional in responsible charge shall be used to determine compliance. During fill placement, the special inspector shall determine that proper materials and procedures are used in accordance with the provisions of the approved soils report, as specified in Section 1803*A*.5.

Exception: Special inspection is not required during placement of controlled fill having a total depth of 12 inches (305 mm) or less.

TABLE 1704*A*.7 - REQUIRED VERIFICATION AND INSPECTION OF SOILS

VERIFICATION AND INSPECTION TASK	CONTINUOUS DURING TASK LISTED	PERIODICALLY DURING TASK LISTED
1. Verify materials below footings are adequate to achieve the design bearing capacity.	—	X
2. Verify excavations are extended to proper depth and have reached proper material.	—	X
3. Perform classification and testing of controlled fill materials.	—	X
4. Verify use of proper materials, densities and lift thicknesses during placement and compaction of controlled fill.	X	—
5. Prior to placement of controlled fill, observe subgrade and verify that site has been prepared properly.	—	X

1704A.7.1 *(Relocated from 3301.1, CBC 2001)* ***Soil Fill.*** *All fills used to support the foundations of any building or structure shall be placed under the direction of a geotechnical engineer, and the placement of the fill shall be inspected by the geotechnical engineer or his or her qualified representative. It shall be the responsibility of such geotechnical engineer to see that the procedures used in placing fills meet*

the requirements of the specifications and to coordinate all fill inspection and testing during the construction involving such fills.

The duties of the geotechnical engineer shall include, but need not be limited to, the observation of cleared areas and benches prepared to receive fill; observation of the removal of all unsuitable soils and other materials; the approval of soils to be used as fill material; the inspection of placement and compaction of fill materials; the testing of the completed fills; and the inspection or review of geotechnical drainage devices where required by the soils investigation, buttress fills or other similar protective measures.

A verified report shall be submitted to the enforcement agency by the geotechnical engineer. The report shall indicate that all the tests required by the plans and specifications were completed and that the tested materials were in compliance with the plans and specifications and the recommendations of the soils investigation report.

1704*A*.8 Pile foundations. Special inspections shall be performed during installation and testing of pile foundations as required by Table 1704*A*.8. The approved soils report, required by Section 1802*A*.2, and the documents prepared by the registered design professional in responsible charge shall be used to determine compliance.

TABLE 1704*A*.8 - REQUIRED VERIFICATION AND INSPECTION OF PILE FOUNDATIONS

VERIFICATION AND INSPECTION TASK	CONTINUOUS DURING TASK LISTED	PERIODICALLY DURING TASK LISTED
1. Verify pile materials, sizes and lengths comply with the requirements.	X	—
2. Determine capacities of test piles and conduct additional load tests, as required.	X	—
3. Observe driving operations and maintain complete and accurate records for each pile.	X	—
4. Verify placement locations and plumbness, confirm type and size of hammer, record number of blows per foot of penetration, determine required penetrations to achieve design capacity, record tip and butt elevations and document any pile damage.	X	—
5. For steel piles, perform additional inspections in accordance with Section 1704*A*.3.	—	—
6. For concrete piles and concrete-filled piles, perform additional inspections in accordance with Section 1704*A*.4.	—	—
7. For specialty piles, perform additional inspections as determined by the registered design professional in responsible charge.	—	—
8. For augered uncased piles and caisson piles, perform inspections in accordance with Section 1704*A*.9.	—	—

1704A.8.1 *(Relocated from 1809A.6, CBC 2001)* ***Pile Observation.*** *The installation of piles shall be continuously observed by a qualified representative of the geotechnical engineer responsible for that portion of the project. The representative of the geotechnical engineer shall be examined by the enforcement agency to determine his / her knowledge and experience in pile-driving operations. The enforcement agency shall approve or reject the representative based on this examination and his / her qualification record.*

The representative of the geotechnical engineer shall make a report of the pile-driving operation giving such pertinent data as the physical characteristics of the pile-driving equipment, identifying marks for each pile, the total depth of embedment for each pile; and when the allowable pile loads are determined by a dynamic load formula, the design formula used, and the permanent penetration under the last 10 blows. One copy of the report shall be sent to the enforcement agency.

1704*A*.9 Pier foundations. Special inspections shall be performed during installation and testing of pier foundations as required by Table 1704*A*.9. The approved soils report, required by Section 1802*A*.2, and the documents prepared by the registered design professional in responsible charge shall be used to determine compliance.

TABLE 1704*A*.9 - REQUIRED VERIFICATION AND INSPECTION OF PIER FOUNDATIONS

VERIFICATION AND INSPECTION TASK	CONTINUOUS DURING TASK LISTED	PERIODICALLY DURING TASK LISTED
1. Observe drilling operations and maintain complete and accurate records for each pier.	X	—
2. Verify placement locations and plumbness, confirm pier diameters, bell diameters (if applicable), lengths, embedment into bedrock (if applicable) and adequate end bearing strata capacity.	X	—
3. For concrete piers, perform additional inspections in accordance with Section 1704*A*.4.	—	—
4. For masonry piers, perform additional inspections in accordance with Section 1704*A*.5.	—	—

1704A.9.1 *(Relocated from 1809A.7.1, CBC 2001)* ***Pier Observation.*** *~~The provisions of Section 1808A.2 shall apply to belled caissons.~~ The belled base of each pier shall be inspected by a qualified representative of the geotechnical engineer to verify the bell size and foundation soil classification. The sloped sides of the belled bases shall be limited to a slope of 2 units vertical to 1 unit horizontal (200% slope) unless reinforced as for a concrete spread footing.*

1704*A*.10 Sprayed fire-resistant materials. Special inspections for sprayed fire-resistant materials applied to structural elements and decks shall be in accordance with Sections 1704*A*.10.1 through 1704*A*.10.5. Special inspections shall be based on the fire-resistance design as designated in the approved construction documents.

1704*A*.10.1 Structural member surface conditions. The surfaces shall be prepared in accordance with the approved fire-resistance design and the approved manufacturer's written instructions. The prepared surface of structural members to be sprayed shall be inspected before the application of the sprayed fire-resistant material.

1704*A*.10.2 Application. The substrate shall have a minimum ambient temperature before and after application as specified in the approved manufacturer's written instructions. The area for application shall be ventilated during and after application as required by the approved manufacturer's written instructions.

1704*A*.10.3 Thickness. The average thickness of the sprayed fire-resistant materials applied to structural elements shall not be less than the thickness required by the approved fire-resistant design. Individually measured thickness, which exceeds the thickness specified in a design by $^1/_4$ inch (6.4 mm) or more, shall be recorded as the thickness specified in the design plus $^1/_4$ inch (6.4 mm). For design thicknesses 1 inch (25 mm) or greater, the minimum allowable individual thickness shall be the design thickness minus $^1/_4$ inch (6.4 mm). For design thicknesses less than 1 inch (25 mm), the minimum allowable individual thickness shall be the design thickness minus 25 percent. Thickness shall be determined in accordance with ASTM E 605. Samples of the sprayed fire-resistant materials shall be selected in accordance with Sections 1704*A*.10.3.1 and 1704*A*.10.3.2.

1704*A*.10.3.1 Floor, roof and wall assemblies. The thickness of the sprayed fire-resistant material applied to floor, roof and wall assemblies shall be determined in accordance with ASTM E 605 by taking the average of not less than four measurements for each 1,000 square feet (93 m^2) of the sprayed area on each floor or part thereof.

1704*A*.10.3.2 Structural framing members. The thickness of the sprayed fire-resistant material applied to structural members shall be determined in accordance with ASTM E 605. Thickness testing shall be performed on not less than 25 percent of the structural members on each floor.

1704*A*.10.4 Density. The density of the sprayed fire-resistant material shall not be less than the density specified in the approved fire-resistant design. Density of the sprayed fire-resistant material shall be determined in accordance with ASTM E 605.

1704*A*.10.5 Bond strength. The cohesive/adhesive bond strength of the cured sprayed fire-resistant material applied to structural elements shall not be less than 150 pounds per square foot (psf) (7.18 kN/m^2). The cohesive/adhesive bond strength shall be determined in accordance with the field test specified in ASTM E 736 by testing in-place samples of the sprayed fire-resistant material selected in accordance with Sections 1704*A*.10.5.1 and 1704*A*.10.5.2.

1704*A*.10.5.1 Floor, roof and wall assemblies. The test samples for determining the cohesive/adhesive bond strength of the sprayed fire-resistant materials shall be selected from each floor, roof and wall assembly at the rate of not less than one sample for every 10,000 square feet (929 m^2) or part thereof of the sprayed area in each story.

1704*A*.10.5.2 Structural framing members. The test samples for determining the cohesive/adhesive bond strength of the sprayed fire-resistant materials shall be selected from beams, girders, joists, trusses and columns at the rate of not less than one sample for each type of structural framing member for each 10,000 square feet (929 m^2) of floor area or part thereof in each story.

1704*A*.11 Mastic and intumescent fire-resistant coatings. Special inspections for mastic and intumescent fire-resistant coatings applied to structural elements and decks shall be in accordance with AWCI 12-B. Special inspections shall be based on the fire-resistance design as designated in the approved construction documents.

1704*A*.12 Exterior insulation and finish systems (EIFS). Special inspections shall be required for all EIFS applications.

Exceptions:

1. Special inspections shall not be required for EIFS applications installed over a water-resistive barrier with a means of draining moisture to the exterior.

2. Special inspections shall not be required for EIFS applications installed over masonry or concrete walls.

1704*A*.13 Special cases. Special inspections shall be required for proposed work that is, in the opinion of the building official, unusual in its nature, such as, but not limited to, the following examples:

1. Construction materials and systems that are alternatives to materials and systems prescribed by this code.

2. Unusual design applications of materials described in this code.

3. Materials and systems required to be installed in accordance with additional manufacturer's instructions that prescribe requirements not contained in this code or in standards referenced by this code.

[F] 1704*A*.14 Special inspection for smoke control. Smoke control systems shall be tested by a special inspector.

[F] 1704*A*.14.1 Testing scope. The test scope shall be as follows:

1. During erection of ductwork and prior to concealment for the purposes of leakage testing and recording of device location.

2. Prior to occupancy and after sufficient completion for the purposes of pressure difference testing, flow measurements and detection and control verification.

[F] 1704*A*.14.2 Qualifications. Special inspection agencies for smoke control shall have expertise in fire protection engineering, mechanical engineering and certification as air balancers.

1704A.15 *(Relocated from 1929A.10, CBC 2001)* ***Inspection of Pneumatically Placed Concrete Work (Shotcrete).*** *All shotcrete work shall be continuously inspected during placing by an inspector specially approved for that purpose by the enforcement agency. The special shotcrete inspector shall check the materials, placing equipment, details of construction and construction procedure. The inspector shall furnish a verified report that of his or her own personal knowledge the work covered by the report has been performed and materials used and installed in every material respect in compliance with the duly approved plans and specifications.*

1704A.15.1 *(Relocated from 1924A.11.2, CBC 2001)* ***Visual examination for structural soundness of in-place shotcrete.*** *Completed shotcrete work shall be checked visually for reinforcing bar embedment, voids, rock pockets, sand streaks and similar deficiencies by examining a minimum of three 3-inch (76 mm) cores taken from three areas chosen by the design engineer which represent the worst congestion of reinforcing bars occurring in the project. Extra reinforcing bars may be added to noncongested areas and cores may be taken from these areas. The cores shall be examined by the special inspector and a report submitted to the enforcement agency prior to final approval of the shotcrete.*

Exception: *Shotcrete work fully supported on earth, minor repairs, and when, in the opinion of the enforcement agency, no special hazard exists.*

1704A.16 *(Relocated from 1701A.5, Item #8, CBC 2001)* ***Reinforced gypsum concrete.*** *All gypsum concrete work shall be continuously inspected when mixed and placed.*

SECTION 1705*A* - STATEMENT OF SPECIAL INSPECTIONS

1705*A*.1 General. Where special inspection or testing is required by Section 1704*A*, 1707*A* or 1708*A*, the registered design professional in responsible charge shall prepare a statement of special inspections in accordance with Section 1705*A* for submittal by the permit applicant (see Section 1704*A*.1.1).

1705*A*.2 Content of statement of special inspections. The statement of special inspections shall identify the following:

1. The materials, systems, components and work required to have special inspection or testing by the building official or by the registered design professional responsible for each portion of the work.

2. The type and extent of each special inspection.

3. The type and extent of each test.

4. Additional requirements for special inspection or testing for seismic or wind resistance as specified in Section 1705*A*.3, 1705*A*.4, 1707*A* or 1708*A*.

5. For each type of special inspection, identification as to whether it will be continuous special inspection or periodic special inspection.

1705*A*.3 Seismic resistance. The statement of special inspections shall include seismic requirements for the following cases:

1. The seismic-force-resisting systems in structures assigned to Seismic Design Category ~~C,~~ D, E or F in accordance with Section 1613*A*.

2. Designated seismic systems in structures assigned to Seismic Design Category D, E or F.

3. The following additional systems and components in structures assigned to Seismic Design Category C:

   3.1. Heating, ventilating and air-conditioning (HVAC) ductwork containing hazardous materials and anchorage of such ductwork.

   3.2. Piping systems and mechanical units containing flammable, combustible or highly toxic materials.

   3.3. Anchorage of electrical equipment used for emergency or standby power systems.

4. The following additional systems and components in structures assigned to Seismic Design Category D:

4.1. Systems required for Seismic Design Category C.

4.2. Exterior wall panels and their anchorage.

4.3. Suspended ceiling systems and their anchorage.

4.4. Access floors and their anchorage.

4.5. Steel storage racks and their anchorage, where the importance factor is equal to 1.5 in accordance with Section 15.5.3 of ASCE 7.

5. The following additional systems and components in structures assigned to Seismic Design Category E or F:

5.1. Systems required for Seismic Design Categories C and D.

5.2. Electrical equipment.

Exception: Seismic requirements are permitted to be excluded from the statement of special inspections for structures designed and constructed in accordance with the following:

1. The structure consists of light-frame construction; the design spectral response acceleration at short periods, S_{DS}, as determined in Section 1613*A*.5.4, does not exceed 0.5g; and the height of the structure does not exceed 35 feet (10 668 mm) above grade plane; or

2. The structure is constructed using a reinforced masonry structural system or reinforced concrete structural system; the design spectral response acceleration at short periods,S_{DS}, as determined in Section 1613*A*.5.4, does not exceed 0.5g; and the height of the structure does not exceed 25 feet (7620 mm) above grade plane; or

3. Detached one- or two-family dwellings not exceeding two stories in height, provided the structure does not have any of the following plan or vertical irregularities in accordance with Section 12.3.2 of ASCE 7:

3.1. Torsional irregularity.

3.2. Nonparallel systems.

3.3. Stiffness irregularity-extreme soft story and soft story.

3.4. Discontinuity in capacity-weak story.

1705*A*.3.1 Seismic requirements in the statement of special inspections. When Section 1705*A*.3 specifies that seismic requirements be included, the statement of special inspections shall identify the following:

1. The designated seismic systems and seismic-force-resisting systems that are subject to special inspections in accordance with Section 1705*A*.3.

2. The additional special inspections and testing to be provided as required by Sections 1707*A* and 1708*A* and other applicable sections of this code, including the applicable standards referenced by this code.

1705*A*.4 Wind resistance. The statement of special inspections shall include wind requirements for structures constructed in the following areas:

1. In wind Exposure Category B, where the 3-second-gust basic wind speed is 120 miles per hour (mph) (52.8 m/s) or greater.

2. In wind Exposure Category C or D, where the 3-second-gust basic wind speed is 110 mph (49 m/s) or greater.

1705*A*.4.1 Wind requirements in the statement of special inspections. When Section 1705*A*.4 specifies that wind requirements be included, the statement of special inspections shall identify the main windforce-resisting systems and wind-resisting components subject to special inspections as specified in Section 1705*A*.4.2.

1705*A*.4.2 Detailed requirements. The statement of special inspections shall include at least the following systems and components:

1. Roof cladding and roof framing connections.

2. Wall connections to roof and floor diaphragms and framing.

3. Roof and floor diaphragm systems, including collectors, drag struts and boundary elements.

4. Vertical windforce-resisting systems, including braced frames, moment frames and shear walls.

5. Windforce-resisting system connections to the foundation.

6. Fabrication and installation of systems or components required to meet the impact-resistance requirements of Section 1609*A*.1.2.

Exception: Fabrication of manufactured systems or components that have a label indicating compliance with the wind-load and impact-resistance requirements of this code.

SECTION 1706*A* - CONTRACTOR RESPONSIBILITY

1706*A*.1 Contractor responsibility. Each contractor responsible for the construction of a main wind- or seismic-force-resisting system, designated seismic system or a wind- or seismic-resisting component listed in the statement of special inspections shall submit a written statement of responsibility to the building official and the owner prior to the commencement of work on the system or component. The contractor's statement of responsibility shall contain the following:

1. Acknowledgment of awareness of the special requirements contained in the statement of special inspections;

2. Acknowledgment that control will be exercised to obtain conformance with the construction documents approved by the building official;

3. Procedures for exercising control within the contractor's organization, the method and frequency of reporting and the distribution of the reports; and

4. Identification and qualifications of the person(s) exercising such control and their position(s) in the organization.

SECTION 1707*A* - SPECIAL INSPECTIONS FOR SEISMIC RESISTANCE

1707*A*.1 Special inspections for seismic resistance. Special inspections itemized in Sections 1707*A*.2 through 1707*A*.10, unless exempted by the exceptions of Section 1704*A*.1, are required for the following:

1. The seismic-force-resisting systems in structures assigned to Seismic Design Category ~~C,~~ D, E or F, as determined in Section 1613*A*.

2. Designated seismic systems in structures assigned to Seismic Design Category D, E or F.

3. Architectural, mechanical and electrical components in structures assigned to Seismic Design Category ~~C,~~ D, E or F that are required in Sections 1707*A*.7 and 1707*A*.8.

1707*A*.2 Structural steel. Continuous special inspection is required for structural welding in accordance with AISC 341.

Exceptions:

1. Single-pass fillet welds not exceeding $^{5}/_{16}$ inch (7.9 mm) in size.

2. Floor and roof deck welding.

1707*A*.3 Structural wood. Continuous special inspection is required during field gluing operations of elements of the seismic-force-resisting system. Periodic special inspection is required for nailing, bolting, anchoring and other fastening of components within the seismic-force-resisting system, including wood shear walls, wood diaphragms, drag struts, braces, shear panels and hold-downs.

Exception: *Not permitted by OSHPD and DSA-SS*. ~~Special inspection is not required for wood shear walls, shear panels and diaphragms, including nailing, bolting, anchoring and other fastening to other components of the seismic-force-resisting system, where the fastener spacing of the sheathing is more than 4 inches (102 mm) on center (o.c.).~~

1707*A*.4 Cold-formed steel framing. Periodic special inspections is required during welding operations of elements of the seismic-force-resisting system. Periodic special inspection is required for screw attachment, bolting, anchoring and other fastening of components within the seismic-force-resisting system, including struts, braces, and hold-downs.

1707*A*.5 Pier foundations. Special inspection is required for pier foundations for buildings assigned to Seismic Design Category ~~C,~~ D, E or F in accordance with Section 1613*A*. Periodic special inspection is required during placement of reinforcement and continuous special inspection is required during placement of the concrete.

1707*A*.6 Storage racks and access floors. Periodic special inspection is required during the anchorage of access floors and storage racks 8 feet (2438 mm) or greater in height in structures assigned to Seismic Design Category D, E or F.

1707*A*.7 Architectural components. Periodic special inspection is required during the erection and fastening of exterior cladding, interior and exterior nonbearing walls and interior and exterior veneer in structures assigned to Seismic Design Category D, E or F.

Exceptions: *Not permitted by OSHPD and DSA-SS.*

~~1. Special inspection is not required for architectural components in structures 30 feet (9144 mm) or less in height.~~

~~2. Special inspection is not required for cladding and veneer weighing 5 psf (24.5 N/m2) or less.~~

~~3. Special inspection is not required for interior nonbearing walls weighing 15 psf (73.5 N/m2) or less.~~

1707*A*.8 Mechanical and electrical components. Special inspection for mechanical and electrical equipment shall be as follows:

1. Periodic special inspection is required during the anchorage of electrical equipment for emergency or standby power systems in structures assigned to Seismic Design Category ~~C,~~ D, E or F;

2. Periodic special inspection is required during the installation of anchorage of other electrical equipment in structures assigned to Seismic Design Category E or F;

3. Periodic special inspection is required during installation of piping systems intended to carry flammable, combustible or highly toxic contents and their associated mechanical units in structures assigned to Seismic Design Category ~~C,~~ D, E or F;

4. Periodic special inspection is required during the installation of HVAC ductwork that will contain hazardous materials in structures assigned to Seismic Design Category ~~C,~~ D, E or F; and

5. Periodic special inspection is required during the installation of vibration isolation systems in structures assigned to Seismic Design Category ~~C,~~ D, E or F where the construction documents require a nominal clearance of 0.25 inches (6.4 mm) or less between the equipment support frame and restraint.

1707*A*.9 Designated seismic system verifications. The special inspector shall examine designated seismic systems requiring seismic qualification in accordance with Section 1708*A*.5 and verify that the label, anchorage or mounting conforms to the certificate of compliance.

1707*A*.10 Seismic isolation system. Periodic special inspection is required during the fabrication and installation of isolator units and energy dissipation devices that are part of the seismic isolation system. *(Relocated from 1664A.3, CBC 2001)* *Continuous special inspection is required for prototype and production testing of isolator units and energy dissipation devices that are part of the seismic isolation system.*

SECTION 1708*A* - STRUCTURAL TESTING FOR SEISMIC RESISTANCE

1708*A*.1 Masonry. Testing and verification of masonry materials and assemblies prior to construction shall comply with the requirements of Sections 1708*A*.1.1 through 1708*A*.1.4, depending on the classification of the building or structure or nature of the occupancy, as defined by this code.

1708*A*.1.1 ~~Empirically designed masonry and glass~~ *Glass* unit masonry in Occupancy Category I ~~, II or III~~. For masonry designed by Section ~~2109 or~~ ~~2110~~ *2110A or 2115A* ~~or by Chapter 5 or 7 of ACI 530/ASCE 5/TMS 402~~ in structures classified as Occupancy Category I ~~, II or III~~, in accordance with Section 1604*A*.5, certificates of compliance used in masonry construction shall be verified prior to construction.

1708*A*.1.2 ~~Empirically designed masonry and glass~~ *Glass* unit masonry in Occupancy Category *II, III or* IV. The minimum testing and verification prior to construction for masonry designed by Section ~~2109 or 2110~~ *2110A or 2115A* ~~or by Chapter 5 or 7 of ACI 530/ASCE 5/TMS 402~~ in structures classified as Occupancy Category *II, III or* IV, in accordance with Section 1604*A*.5, shall comply with the requirements of Table 1708*A*.1.2.

TABLE 1708*A*.1.2 - LEVEL 1 QUALITY ASSURANCE

MINIMUM TESTS AND SUBMITTALS
Certificates of compliance used in masonry construction. Verification of f'_m ~~and f'_{AAC}~~ prior to construction, except where specifically exempted by this code.

1708*A*.1.3 Engineered masonry in Occupancy Category I ~~, II or III~~. The minimum testing and verification prior to construction for masonry designed by Section 2107*A* or 2108*A* or by chapters other than Chapter 5, 6 or 7 of ACI 530/ASCE 5/TMS 402 in structures classified as Occupancy Category I**,** ~~II or III,~~ in accordance with Section 1604*A*.5, shall comply with Table 1708*A*.1.2.

1708*A*.1.4 Engineered masonry in Occupancy Category *II, III or* IV. The minimum testing and verification prior to construction for masonry designed by Section 2107*A* or 2108*A* or by chapters other than Chapter 5, 6 or 7 of ACI 530/ASCE 5/TMS 402 in structures classified as Occupancy Category *II, III or* IV, in accordance with Section 1604*A*.5, shall comply with Table 1708*A*.1.4.

TABLE 1708*A*.1.4 - LEVEL 2 QUALITY ASSURANCE

MINIMUM TESTS AND SUBMITTALS
Certificates of compliance used in masonry construction. Verification of f'_m ~~and f'_{AAC}~~ prior to construction and every 5,000 square feet during construction. Verification of proportions of materials in mortar and grout as delivered to the site.

For SI: 1 square foot = 0.0929 m^2.

1708*A*.2 Testing for seismic resistance. The tests specified in Sections 1708*A*.3 through 1708*A*.6 are required for the following:

1. The seismic-force-resisting systems in structures assigned to Seismic Design Category ~~C,~~ D, E or F, as determined in Section 1613*A*.

2. Designated seismic systems in structures assigned to Seismic Design Category D, E or F.

3. Architectural, mechanical and electrical components in structures assigned to Seismic Design Category ~~C,~~ D, E or F that are required in Section 1708*A*.5.

1708*A*.3 Reinforcing and prestressing steel. Certified mill test reports shall be provided for each shipment of reinforcing steel used to resist flexural, shear and axial forces in reinforced concrete intermediate frames, special moment frames and boundary elements of special reinforced concrete or reinforced masonry shear walls. Where ASTM A 615 reinforcing steel is used to resist earthquake-induced flexural and axial forces in special moment frames and in wall boundary elements of shear walls in structures assigned to Seismic Design Category D, E or F, as determined in Section 1613*A*, the testing requirements of ACI 318 shall be met. Where ASTM A 615 reinforcing steel is to be welded, chemical tests shall be performed to determine weldability in accordance with Section 3.5.2 of ACI 318.

1708*A*.4 Structural steel. The testing contained in the quality assurance plan shall be as required by AISC 341 and the additional requirements herein. The acceptance criteria for nondestructive testing shall be as required in AWS D1.1 as specified by the registered design professional.

Base metal thicker than 1.5 inches (38 mm), where subject to through-thickness weld shrinkage strains, shall be ultrasonically tested for discontinuities behind and adjacent to such welds after joint completion. Any material discontinuities shall be accepted or rejected on the basis of ASTM A 435 or ASTM A 898 (Level 1 criteria) and criteria as established by the registered design professional(s) in responsible charge and the construction documents.

1708*A*.5 Seismic qualification of mechanical and electrical equipment. The registered design professional in responsible charge shall state the applicable seismic qualification requirements for designated seismic systems on the construction documents. Each manufacturer of designated seismic system components shall test or analyze the component and its mounting system or anchorage and submit a certificate of compliance for review and acceptance by the registered design professional in responsible charge of the design of the designated seismic system and for approval by the building official. Qualification shall be by an actual test on a shake table, by three-dimensional shock tests, by an analytical method using dynamic characteristics and forces, by the use of experience data (i.e., historical data demonstrating acceptable seismic performance) or by a more rigorous analysis providing for equivalent safety.

1708*A*.6 Seismically isolated structures. For required system tests, see Section 17.8 of ASCE 7.

SECTION 1709*A* - STRUCTURAL OBSERVATIONS

1709*A*.1 General. Where required by the provisions of Section 1709*A*.2 or 1709*A*.3 the owner shall employ a registered design professional to perform structural observations as defined in Section 1702*A*.

At the conclusion of the work included in the permit, the structural observer shall submit to the building official a written statement that the site visits have been made and identify any reported deficiencies that, to the best of the structural observer's knowledge, have not been resolved.

1709*A*.2 Structural observations for seismic resistance. *(Relocated from 1702A.2, CBC 2001) Observation of the construction shall be provided by the architect or engineer in general responsible charge as set forth in Title 24, Part 1 ~~Sections 7-141 and 7-144~~.*

~~Structural observations shall be provided for those structures included in Seismic Design Category D, E or F, as determined in Section 1613, where one or more of the following conditions exist:~~

~~1. The structure is classified as Occupancy Category III or IV in accordance with Section 1604A.5.~~

~~2. The height of the structure is greater than 75 feet (22 860 mm) above the base.~~

~~3. The structure is assigned to Seismic Design Category E, is classified as Occupancy Category I or II in accordance with Section 1604.5 and is greater than two stories in height.~~

~~4. When so designated by the registered design professional in responsible charge of the design.~~

~~5. When such observation is specifically required by the building official.~~

1709*A*.3 Structural observations for wind requirements. *(Relocated from 1702A.2, CBC 2001) Observation of the construction shall be provided by the architect or engineer in general responsible charge as set forth in Title 24, Part 1 ~~Sections 7-141 and 7-144~~.*

~~Structural observations shall be provided for those structures sited where the basic wind speed exceeds 110 mph (49 m/s), determined from Figure 1609, where one or more of the following conditions exist:~~

~~1. The structure is classified as Occupancy Category III or IV in accordance with Table 1604.5.~~

~~2. The building height is greater than 75 feet (22 860 mm).~~

~~3. When so designated by the registered design professional in responsible charge of the design.~~

~~4. When such observation is specifically required by the building official.~~

SECTION 1710*A* - DESIGN STRENGTHS OF MATERIALS

1710*A*.1 Conformance to standards. The design strengths and permissible stresses of any structural material that are identified by a manufacturer's designation as to manufacture and grade by mill tests, or the strength and stress grade is otherwise confirmed to the satisfaction of the building official, shall conform to the specifications and methods of design of accepted engineering practice or the approved rules in the absence of applicable standards.

1710*A*.2 New materials. For materials that are not specifically provided for in this code, the design strengths and permissible stresses shall be established by tests as provided for in Section 1711*A*.

SECTION 1711*A* - ALTERNATIVE TEST PROCEDURE

1711*A*.1 General. In the absence of approved rules or other approved standards, the building official shall make, or cause to be made, the necessary tests and investigations; or the building official shall accept duly authenticated reports from approved agencies in respect to the quality and manner of use of new materials or assemblies as provided for in Section 104.11*, Appendix Chapter 1*. The cost of all tests and other investigations required under the provisions of this code shall be borne by the permit applicant.

SECTION 1712*A* - TEST SAFE LOAD

1712*A*.1 Where required. Where proposed construction is not capable of being designed by approved engineering analysis, or where proposed construction design method does not comply with the applicable material design standard, the system of construction or the structural unit and the connections shall be subjected to the tests prescribed in Section 1714*A*. The building official shall accept certified reports of such tests conducted by an approved testing agency, provided that such tests meet the requirements of this code and approved procedures.

SECTION 1713*A* - IN-SITU LOAD TESTS

1713*A*.1 General. Whenever there is a reasonable doubt as to the stability or load-bearing capacity of a completed building, structure or portion thereof for the expected loads, an engineering assessment shall be required. The engineering assessment shall involve either a structural analysis or an in-situ load test, or both. The structural analysis shall be based on actual material properties and other as-built conditions that affect stability or load-bearing capacity, and shall be conducted in accordance with the applicable design standard. If the structural assessment determines that the load-bearing capacity is less than that required by the code, load tests shall be conducted in accordance with Section 1713*A*.2. If the building, structure or portion thereof is found to have inadequate stability or load-bearing capacity for the expected loads, modifications to ensure structural adequacy or the removal of the inadequate construction shall be required.

1713*A*.2 Test standards. Structural components and assemblies shall be tested in accordance with the appropriate material standards listed in Chapter 35. In the absence of a standard that contains an applicable load test procedure, the test procedure shall be developed by a registered design professional and approved. The test procedure shall simulate loads and conditions of application that the completed structure or portion thereof will be subjected to in normal use.

1713*A*.3 In-situ load tests. In-situ load tests shall be conducted in accordance with Section 1713*A*.3.1 or 1713*A*.3.2 and shall be supervised by a registered design professional. The test shall simulate the applicable loading conditions specified in Chapter 16A as necessary to address the concerns regarding structural stability of the building, structure or portion thereof.

1713*A*.3.1 Load test procedure specified. Where a standard listed in Chapter 35 contains an applicable load test procedure and acceptance criteria, the test procedure and acceptance criteria in the standard shall apply. In the absence of specific load factors or acceptance criteria, the load factors and acceptance criteria in Section 1713*A*.3.2 shall apply.

1713*A*.3.2 Load test procedure not specified. In the absence of applicable load test procedures contained within a standard referenced by this code or acceptance criteria for a specific material or method of construction, such existing structure shall be subjected to a test procedure developed by a registered design professional that simulates applicable loading and deformation conditions. For components that are not a part of the seismic-load-resisting system, the test load shall be equal to two times the unfactored design loads. The test load shall be left in place for a period of 24 hours. The structure shall be considered to have successfully met the test requirements where the following criteria are satisfied:

1. Under the design load, the deflection shall not exceed the limitations specified in Section 1604*A*.3.

2. Within 24 hours after removal of the test load, the structure shall have recovered not less than 75 percent of the maximum deflection.

3. During and immediately after the test, the structure shall not show evidence of failure.

SECTION 1714*A* - PRECONSTRUCTION LOAD TESTS

1714*A*.1 General. In evaluating the physical properties of materials and methods of construction that are not capable of being designed by approved engineering analysis or do not comply with applicable material design standards listed in Chapter 35, the structural adequacy shall be predetermined based on the load test criteria established in this section.

1714*A*.2 Load test procedures specified. Where specific load test procedures, load factors and acceptance criteria are included in the applicable design standards listed in Chapter 35, such test procedures, load factors and acceptance criteria shall apply. In the absence of specific test procedures, load factors or acceptance criteria, the corresponding provisions in Section 1714*A*.3 shall apply.

1714*A*.3 Load test procedures not specified. Where load test procedures are not specified in the applicable design standards listed in Chapter 35, the load-bearing and deformation capacity of structural components and assemblies shall be determined on the basis of a test procedure developed by a registered design professional that simulates applicable loading and deformation conditions. For components and assemblies that are not a part of the seismic-load-resisting system, the test shall be as specified in Section 1714*A*.3.1. Load tests shall simulate the applicable loading conditions specified in Chapter 16*A*.

1714*A*.3.1 Test procedure. The test assembly shall be subjected to an increasing superimposed load equal to not less than two times the superimposed design load. The test load shall be left in place for a period of 24 hours. The tested assembly shall be considered to have successfully met the test requirements if the assembly recovers not less than 75 percent of the maximum deflection within 24 hours after the removal of the test load. The test assembly shall then be reloaded and subjected to an increasing superimposed load until either structural failure occurs or the superimposed load is equal to two and one-half times the load at which the deflection limitations specified in Section 1714*A*.3.2 were reached, or the load is equal to two and one-half times the superimposed design load. In the case of structural components and assemblies for which deflection limitations are not specified in Section 1714*A*.3.2, the test specimen shall be subjected to an increasing superimposed load until structural failure occurs or the load is equal to two and one-half times the desired superimposed design load. The allowable superimposed design load shall be taken as the lesser of:

1. The load at the deflection limitation given in Section 1714*A*.3.2.

2. The failure load divided by 2.5.

3. The maximum load applied divided by 2.5.

1714*A*.3.2 Deflection. The deflection of structural members under the design load shall not exceed the limitations in Section 1604*A*.3.

1714*A*.4 Wall and partition assemblies. Load-bearing wall and partition assemblies shall sustain the test load both with and without window framing. The test load shall include all design load components. Wall and partition assemblies shall be tested both with and without door and window framing.

1714*A*.5 Exterior window and door assemblies. The design pressure rating of exterior windows and doors in buildings shall be determined in accordance with Section 1714*A*.5.1 or 1714*A*.5.2.

Exception: Structural wind load design pressures for window units smaller than the size tested in accordance with Section 1714*A*.5.1 or 1714*A*.5.2 shall be permitted to be higher than the design value of the tested unit provided such higher pressures are determined by accepted engineering analysis. All components of the small unit shall be the same as the tested unit. Where such calculated design pressures are used, they shall be validated by an additional test of the window unit having the highest allowable design pressure.

1714*A*.5.1 Exterior windows and doors. Exterior windows and sliding doors shall be tested and labeled as conforming to AAMA/WDMA/CSA101/I.S.2/A440. The label shall state the name of the manufacturer, the approved labeling agency and the product designation as specified in AAMA/ WDMA/CSA101/I.S.2/A440. Exterior side-hinged doors shall be tested and labeled as conforming to AAMA/WDMA/CSA101/I.S.2/A440 or comply with Section 1714*A*.5.2. Products tested and labeled as conforming to AAMA/WDMA/CSA 101/I.S.2/A440 shall not be subject to the requirements of Sections 2403*A*.2 and 2403*A*.3.

1714*A*.5.2 Exterior windows and door assemblies not provided for in Section 1714*A*.5.1. Exterior window and door assemblies shall be tested in accordance with ASTM E 330. Exterior window and door assemblies containing glass shall comply with Section 2403*A*. The design pressure for testing shall be calculated in accordance with Chapter 16*A*. Each assembly shall be tested for 10 seconds at a load equal to 1.5 times the design pressure.

1714*A*.6 Test specimens. Test specimens and construction shall be representative of the materials, workmanship and details normally used in practice. The properties of the materials used to construct the test assembly shall be determined on the basis of tests on samples taken from the load assembly or on representative samples of the materials used to construct the load test assembly. Required tests shall be conducted or witnessed by an approved agency.

SECTION 1715*A* - MATERIAL AND TEST STANDARDS

1715*A*.1 Test standards for joist hangers and connectors.

1715*A*.1.1 Test standards for joist hangers. The vertical load-bearing capacity, torsional moment capacity and deflection characteristics of joist hangers shall be determined in accordance with ASTM D 1761 using lumber having a specific gravity of 0.49 or greater, but not greater than 0.55, as determined in accordance with AF&PA NDS for the joist and headers.

Exception: The joist length shall not be required to exceed 24 inches (610 mm).

1715*A*.1.2 Vertical load capacity for joist hangers. The vertical load capacity for the joist hanger shall be determined by testing a minimum of three joist hanger assemblies as specified in ASTM D 1761. If the ultimate vertical load for any one of the tests varies more than 20 percent from the average ultimate vertical load, at least three additional tests shall be conducted. The allowable vertical load of the joist hanger shall be the lowest value determined from the following:

1. The lowest ultimate vertical load for a single hanger from any test divided by three (where three tests are conducted and each ultimate vertical load does not vary more than 20 percent from the average ultimate vertical load).

2. The average ultimate vertical load for a single hanger from all tests divided by three (where six or more tests are conducted).

3. The average from all tests of the vertical loads that produce a vertical movement of the joist with respect to the header of 0.125 inch (3.2 mm).

4. The sum of the allowable design loads for nails or other fasteners utilized to secure the joist hanger to the wood members and allowable bearing loads that contribute to the capacity of the hanger.

5. The allowable design load for the wood members forming the connection.

1715*A*.1.3 Torsional moment capacity for joist hangers. The torsional moment capacity for the joist hanger shall be determined by testing at least three joist hanger assemblies as specified in ASTM D 1761. The allowable torsional moment of the joist hanger shall be the average torsional moment at which the lateral movement of the top or bottom of the joist with respect to the original position of the joist is 0.125 inch (3.2 mm).

1715*A*.1.4 Design value modifications for joist hangers. Allowable design values for joist hangers that are determined by Item 4 or 5 in Section 1715*A*.1.2 shall be permitted to be modified by the appropriate duration of loading factors as specified in AF&PA NDS but shall not exceed the direct loads as determined by Item 1, 2 or 3 in Section 1715*A*.1.2. Allowable design values determined by Item 1, 2 or 3 in Section 1715*A*.1.2 shall not be modified by duration of loading factors.

1715*A*.2 Concrete and clay roof tiles.

1715*A*.2.1 Overturning resistance. Concrete and clay roof tiles shall be tested to determine their resistance to overturning due to wind in accordance with SBCCI SSTD 11 and Chapter 15.

1715*A*.2.2 Wind tunnel testing. When roof tiles do not satisfy the limitations in Chapter 16*A* for rigid tile, a wind tunnel test shall be used to determine the wind characteristics of the concrete or clay tile roof covering in accordance with SBCCI SSTD 11 and Chapter 15.

Notation [For DSA-SS]:
Authority: Education Code Sections 17310, 81142; Health & Safety Code Section 16022
Reference(s): Education Code Sections 17280 - 17317, and 811130 - 81149; Health & Safety Code Sections 16000 – 16023

Notation [For OSHPD]:
Authority: Health and Safety Code Section 129850
Reference: Health and Safety Code Sections 1275, 129850 and 129790

CHAPTER 18
SOILS AND FOUNDATIONS

2001 CBC	PROPOSED ADOPTION	OSHPD		Comments
		2	3	
	Adopt entire chapter without amendments		X	
	Adopt entire chapter with amendments listed below	X		
	Adopt only those sections listed below			
	1802.2	X		
	1802.6	X		
1804.8 CA	*1802.7 CA*	X		Relocated existing California Building Standards into IBC format
1802.9 CA	*1802.8 CA*	X		Relocated existing California Building Standards into IBC format

EXPRESS TERMS

SECTION 1801 GENERAL

1801.1 Scope. The provisions of this chapter shall apply to building and foundation systems in those areas not subject to scour or water pressure by wind and wave action. Buildings and foundations subject to such scour or water pressure loads shall be designed in accordance with Chapter 16.

SECTION 1802 FOUNDATION AND SOIL INVESTIGATIONS

1802.1 General. Foundation and soils investigations shall be conducted in conformance with Sections 1802.2 through *1802.~~6~~8.* Where required by the building official, the classification and investigation of the soil shall be made by a registered design professional.

1802.2 Where required. The owner or applicant shall submit a foundation and soils investigation to the building official where required in Sections 1802.2.1 through 1802.2.7.

Exception: The building official need not require a foundation or soils investigation where satisfactory data from adjacent areas is available that demonstrates an investigation is not necessary for any of the conditions in Sections 1802.2.1 through 1802.2.6.

[For OSHPD 2] Geotechnical reports are not required for one-story, wood-frame and light-steel-frame buildings of Type V construction and 4,000 square feet (371m^2) or less in floor area, not located within Earthquake Fault Zones or Seismic Hazard Zones as shown in the most recently published maps from California Division of Mines and Geology (DMG) / California Geological Survey (CGS). Allowable foundation and lateral soil pressure values may be determined from Table 1804.2.

…..

1802.6 Reports. The soil classification and design load-bearing capacity shall be shown on the construction document. Where required by the building official, a written report of the investigation shall be submitted that includes, but need not be limited to, the following information:

1. A plot showing the location of test borings and/or excavations.
2. A complete record of the soil samples.
3. A record of the soil profile.
4. Elevation of the water table, if encountered.
5. Recommendations for foundation type and design criteria, including but not limited to: bearing capacity of natural or compacted soil; provisions to mitigate the effects of expansive soils; mitigation of the effects of liquefaction, differential settlement and varying soil strength; and the effects of adjacent loads.
6. Expected total and differential settlement.
7. Pile and pier foundation information in accordance with Section 1808.2.2.
8. Special design and construction provisions for footings or foundations founded on expansive soils, as necessary.
9. Compacted fill material properties and testing in accordance with Section 1803.5.
10. [For OSHPD 2] The report shall consider the effects of seismic hazard per section 1802A.7 & 1802A.8.

1802.7 ***(Relocated from 1804.8, 2001 CBC)*** ***[For OSHPD 2] Engineering geologic reports.***

1802.7.1 *Geologic and earthquake engineering reports shall be required for all proposed construction.*

EXCEPTIONS: *1. Reports are not required for one-story, wood-frame and light-steel-frame buildings of Type V construction and 4,000 square feet (371m^2) or less in floor area, not located within Earthquake Fault Zones or Seismic Hazard Zones as shown in the most recently published maps from California Division of Mines and Geology (DMG) / California Geological Survey (CGS); nonstructural, associated structural or nonrequired structural alterations and incidental structural additions or alterations, and structural repairs for other than earthquake damage (See section 3402A.1 for definitions of terms in this section).*

2. A previous report for a specific site may be resubmitted, provided that a reevaluation is made and the report is found to be currently appropriate.

1802.7.2 *The purpose of the engineering geologic report shall be to identify geologic and seismic conditions that may require project mitigations. The reports shall contain data which provide an assessment of the nature of the site and potential for earthquake damage based on appropriate investigations of the regional and site geology, project foundation conditions and the potential seismic shaking at the site. The report shall be prepared by a California-certified engineering geologist in consultation with a California-registered geotechnical engineer. ~~The engineering geologic report shall not contain design criteria, but shall contain basic data to be used for a preliminary earthquake engineering evaluation of the project.~~*

The preparation of the engineering geologic report shall ~~be done in conformance with the most recent Division of Mines and Geology (DMG) Notes 44, 42 and 43; Guidelines for preparing Engineering Geologic Reports, and Guidelines to Geologic/Seismic Reports, respectively~~ consider the most recent DMG / CGS Note 48; Checklist for the Review of Engineering Geology and Seismology Reports for California Public School, Hospitals, and Essential Services Buildings. ~~Upperbound earthquakes, proposed in the Engineering Geologic Report, must be fully supported by satisfactory data and analysis~~. In addition, the most recent version of DMG / CGS Special Publication 42, Fault Rupture Hazard Zones in California, shall be considered for project sites proposed within an Alquist-Priolo Earthquake Fault Zone. The most recent version of DMG / CGS Special Publication 117, Guidelines for Evaluating and Mitigating Seismic Hazards in California, shall be considered for project sites proposed within a Seismic Hazard Zone. All conclusions shall be fully supported by satisfactory data and analysis.

The report shall include, but shall not be limited to, the following:

1. Geologic investigation.

2. Evaluation of the known active and potentially active faults, both regional and local.~~ including estimates of their upperbound earthquakes and maximum probable earthquake, as defined in DMG Note 43, and estimates of the peak ground accelerations at the site resulting from these earthquakes.~~

3. Ground-motion parameters, as required by Section 1613 and ASCE 7.

4. Evaluation of slope stability at or near the site and

5. The liquefaction and settlement potential of the earth materials in the foundation.

~~1804.8.3~~ *~~The engineering geologic report shall be submitted to the Office of Statewide Health Planning and Development for review and approval. The review shall determine whether potential geologic problems and hazards are adequately identified and described in order to provide a timely completion of the subsequent geotechnical report, described in Section 1804.9, following. The Office of Statewide Health Planning and Development, with consultation of its advisors, may require additional information, analysis and/or clarification of potential geologic problems affecting the proposed building site before approval is given. The results of the approved engineering geologic report shall be used as a basis for further investigations for the geotechnical report. Approval of the engineering geologic report by the Office of Statewide Health Planning and Development shall be required prior to the submission of the geotechnical report.~~*

1802.8 ***(Relocated from 1804.9, 2001 CBC)*** ***[For OSHPD 2] Geotechnical and Supplemental Ground-response Reports.***

1802.8.1 ***Geotechnical report.*** *The geotechnical report shall provide completed evaluations of the foundation conditions of the site and the potential geologic / seismic hazards affecting the site. The geotechnical report shall include, but shall not be limited to, site-specific evaluations of design criteria related to the nature and extent of foundation materials, groundwater conditions, liquefaction potential, settlement potential and slope stability. The report shall contain the results of the analyses of problem areas identified in the engineering geologic report. The geotechnical report shall incorporate estimates of the characteristics of site ground motion provided in the engineering geologic report. ~~The estimates of ground motion shall not be structural design criteria, but shall be provided to characterize the seismic environment of the site, with consideration of the upper-bound earthquakes reported in the engineering geologic report. The ground-motion estimates shall include, but shall not be limited to, peak ground motions and predominant period. The estimates should be derived by accepted methods of current seismological practice, and fully documented in the geologic report.~~*

The geotechnical report shall be prepared by a geotechnical engineer registered in the state of California with the advice of the certified engineering geologist and other technical experts, as necessary. The approved engineering geologic report shall be submitted with or as part of the geotechnical report.

~~1804.9.1.2~~ *~~The geotechnical report shall be submitted to the Office of Statewide Health Planning and Development for review and approval. The review shall determine whether potential geologic hazards and foundation problems have been adequately evaluated. The Office of Statewide Health Planning and Development, with the consultation of its advisors, may require additional information, analysis or clarification of potential geotechnical issues affecting the proposed building site before approving the geotechnical report. Approval of the geotechnical report by the Office of Statewide Health Planning and Development shall be required prior to the completion of the supplemental ground-response report, if required, as described in Section 1804.9.1.3. The need for a supplemental ground-response report shall be determined during the review of the geotechnical report. The results of the geotechnical report shall be used as a guide for further investigations for the supplemental ground-response report~~.*

1802.8.2 ***Supplemental ground-response report.*** *If site-specific ground-motion procedures, as set forth in ASCE 7 Chapter 21, or ground-motion time-history analysis, as set forth in ASCE 7 Chapter 16 or Section 17.3, are used for design, then a supplemental ground-response report may be required ~~containing a ground-motion element and an advanced geotechnical element~~. All conclusions and ground-motion parameters shall be fully supported by satisfactory data and analysis.*

> *180A.8.2.1 ~~The ground-motion element shall be prepared when required by the approved geotechnical report, or when required for dynamic analysis procedure described under Section 1631.2~~. The ground-motion element shall be prepared by a registered geotechnical engineer or geophysicist (depending on the scope of the element), or engineering geologist licensed in the state of California, and having professional specialization in earthquake analyses. The ground-motion element shall present a detailed characterization of earthquake ground motions for the site, which incorporates data given in the geotechnical report. The level of ground motion considered by the ground-motion element shall be as described in ~~Section 1631.2~~ ASCE 7 Chapter 21. The characterization of ground motion in the ground-motion element shall be given, according to the requirements of the analysis, in terms of:*

~~1. Peak acceleration, bracketed duration and predominant period.~~

1. Elastic structural response spectra.

2. Time-history plot of predicted ground motion at the site.

3. Other analyses in conformance with accepted engineering and seismological practice.

1802A.8.2.2 The advanced geotechnical element shall contain the results of dynamic geotechnical analyses specified by the approved geotechnical report. Where site response analysis, as set forth in ASCE 7 Section 21.1, is required, the response model shall be fully explained. The input data and assumptions shall be fully documented, and the surface ground motions recommended for design shall be clearly identified.

The supplemental ground-response report shall be submitted to the Office of Statewide Health Planning and Development for review and approval. The review shall determine whether the ground-motion response evaluations of the site are adequately represented. The enforcement agency, under consultation with its advisors, may require additional information, analysis or clarification of potential ground-response issues reported in the supplemental ground-response report for the proposed building site.

Notation [For OSHPD]:
Authority: Health and Safety Code Section 129850
Reference: Health and Safety Code Sections 1275 and 129850

SECTION 1807 DAMPPROOFING AND WATERPROOFING

1807.1 Where required. Walls or portions thereof that retain earth and enclose interior spaces and floors below grade shall be waterproofed and dampproofed in accordance with this section, with the exception of those spaces containing groups other than residential and institutional where such omission is not detrimental to the building or occupancy.

Ventilation for crawl spaces shall comply with Section 1203.4.

……..

1807.4 Subsoil drainage system. Where a hydrostatic pressure condition does not exist, dampproofing shall be provided and a base shall be installed under the floor and a drain installed around the foundation perimeter. A subsoil drainage system designed and constructed in accordance with Section 1807.1.3 shall be deemed adequate for lowering the ground-water table.

…….

1807.4.3 Drainage discharge. The floor base and foundation perimeter drain shall discharge by gravity or mechanical means into an approved drainage system that complies with the *California ~~International~~ Plumbing Code*.

Notation [For OSHPD]:
Authority: Health and Safety Code Section 129850
Reference: Health and Safety Code Sections 1275 and 129850

Chapter 18*A* - Soils and Foundations

2001 CBC	PROPOSED ADOPTION	OSHPD		DSA-SS	Comments
		1	4		
	Adopt entire chapter without amendments				
	Adopt entire chapter with amendments listed below	X	X	X	
	Adopt only those sections listed below				
	1801A.1	X	X	X	
1801A.1.1 CA	*1801A.1.1 CA*	X	X	X	
	1801A.1.2 CA	X	X	X	
1804A.1 CA	*1802A.1*	X	X	X	Relocated existing California Building Standards into IBC format
	1802A.2	X	X	X	
	1802A.2.3	X	X	X	
	1802A.2.4	X	X	X	
	1802A.2.6	X	X	X	
	1802A.2.7	X	X	X	
1804A.3.8 CA	*1802A.2.8 CA*	X	X	X	Relocated existing California Building Standards into IBC format
1804A.2 CA	*1802A.4.1*	X	X	X	Relocated existing California Building Standards into IBC format
1637A CA	*1802A.6 CA*	X	X	X	Relocated existing California Building Standards into IBC format
1637A.2.1.1, 1804A.3, Item 6, 1804A.1	*1802A.7*	X	X	X	
1806A.4	*1805A.1*	X	X	X	Relocated existing California Building Standards into IBC format
1806A.2	*1805A.4.1*	X	X	X	Relocated existing California Building Standards into IBC format
Table 18A-I-C	*Table 1805A.4.2*	X	X	X	Relocated existing California Building Standards into IBC format
	1805A.4.2.3	X	X	X	
1806A.1 CA	*1805A.4.2.6*	X	X	X	Relocated existing California Building Standards into IBC format

	1805A.4.3	X	X	X	
	1805A.4.5	X	X	X	
	1805A.4.6	X	X	X	
1806A.11 CA	*1805A.4.7 CA*	X	X	X	Relocated existing California Building Standards into IBC format
	1805A.5	X	X	X	
	Tables 1805.5(1) through 1805.5 (5)				Stricken
	1805A.6	X	X	X	
	1805A.5.7.1	X	X	X	
1611A.6	*1806A.1*	X	X	X	Relocated existing California Building Standards into IBC format
1611A.13 CA	*1806A.2 CA*	X	X	X	Relocated existing California Building Standards into IBC format
	1807A.2	X	X	X	
	1808A.2.23.1	X	X	X	Editorial
	1808A.2.23.2 – Exceptions 2 and 3	X	X	X	
1806A.8.1	*1808A.2.23.2.4 CA*	X	X	X	Relocated existing California Building Standards into IBC format
	1809A.1	X	X	X	
	1809A.2.2.2.1	X	X	X	
	1809A.2.3.2.1	X	X	X	
	1809A.2.3.2.2	X	X	X	
	1810A.1.2.1	X	X	X	
	1810A.2	X	X	X	
	1810A.8.4.1	X	X	X	Editorial
	1811A.4	X	X	X	
	1812A.8	X	X	X	

REPEAL OF EXISTING CALIFORNIA AMENDMENTS IN PART OR IN WHOLE THAT ARE NO LONGER NECESSARY AS FOLLOWS:

2001 CBC DIVISION I – GENERAL

~~2001 CBC SECTION 1802A – QUALITY AND DESIGN:~~ Repeal all amendments in this section.

2001 CBC SECTION 1804A – FOUNDATION INVESTIGATION: Repeal amendments in following subsections.

~~*1804A.1, 1804A.3*~~ *and* ~~*1804A.4*~~.

2001 CBC SECTION 1806A – FOOTINGS: Repeal amendment in the following section.

~~*1806A.1, 1806A.3, 1806A.6*~~ *including all subsections.*

~~2001 CBC SECTION 1807A – PILES – GENERAL REQUIREMENTS:~~ Repeal all amendments in this section including all subsections.

~~2001 CBC SECTION 1808A – SPECIFIC PILES REQUIREMENTS:~~ Repeal all amendments in this section including all subsections.

2001 CBC SECTION 1809A – FOUNDATION CONSTRUCTION – SEISMIC ZONES 3 & 4: Repeal amendments in following subsections.

~~*1809A.5.1*~~ *and* ~~*1809A.5.2.1*~~.

EXPRESS TERMS

SECTION 1801*A* - GENERAL

1801*A*.1 Scope. The provisions of this chapter shall apply to building and foundation systems in those areas not subject to scour or water pressure by wind and wave action. Buildings and foundations subject to such scour or water pressure loads shall be designed in accordance with Chapter 16*A*.

(Relocated from 1801A.1.1, CBC 2001) Refer to Appendix J: Grading, for requirements governing grading, excavation and earthwork construction, including fills and embankments.

1801A.1.1 Application *The scope of application of Chapter 18A is as follows:*

1. Applications listed in Section 109.2 regulated by the Division of the State Architect-Structural Safety (DSA-SS).These applications include public elementary and secondary schools, community colleges and state-owned or state-leased essential services buildings.

2. Applications listed in Section 110.1, and 110.4 regulated by the Office of Statewide Health Planning and Development (OSHPD).These applications include hospitals, skilled nursing facilities, intermediate care facilities and correctional treatment centers.

Exception: *[For OSHPD 2]**:** Single-story Type V skilled nursing or intermediate care facilities utilizing wood-frame or light-steel-frame construction as defined in Health and Safety Code Section 129725, which shall comply with CBC Chapter 18 and any applicable amendments therein.*

1801.1.2 Amendments in this chapter. *DSA - SS and OSHPD adopt this chapter and all amendments.*

Exception: *Amendments adopted by only one agency appear in this chapter preceded with the appropriate acronym of the adopting agency, as follows:*

1. *Division of the State Architect - Structural Safety:*
[DSA-SS] - *For applications listed in Section 109.2*

2. *Office of Statewide Health Planning and Development:*
[OSHPD 1] *- For applications listed in Section 110.1*
[OSHPD 4] *- For applications listed in Section 110.4*

1801*A*.2 Design. Allowable bearing pressures, allowable stresses and design formulas provided in this chapter shall be used with the allowable stress design load combinations specified in Section 1605*A*.3. The quality and design of

materials used structurally in excavations, footings and foundations shall conform to the requirements specified in Chapters 16*A*, 19*A*, 21*A*, 22*A* and 23 of this code. Excavations and fills shall also comply with Chapter 33.

1801*A*.2.1 Foundation design for seismic overturning. Where the foundation is proportioned using the load combinations of Section 1605*A*.2, and the computation of the seismic overturning moment is by the equivalent lateral-force method or the modal analysis method, the proportioning shall be in accordance with Section 12.13.4 of ASCE 7.

SECTION 1802*A* - FOUNDATION AND SOILS INVESTIGATIONS

1802*A*.1 General. Foundation and soils investigations shall be conducted in conformance with Sections 1802*A*.2 through ~~1802.7~~*1802A.8*. ~~Where required by the building official, the classification and investigation of the soil shall be made by a registered design professional.~~ *(Relocated from 1804A.1, CBC 2001)The classification and investigation of the soil shall be made under the responsible charge of a California registered geotechnical engineer. All recommendations contained in geotechnical and engineering geology reports shall be subject to the approval of the enforcement agency, in consultation with the California Division of Mines and Geology (DMG) / California Geological Survey (CGS). All reports shall be prepared and signed by a registered geotechnical engineer and an engineering geologist where applicable.*

1802*A*.2 Where required. The owner or applicant shall submit a foundation and soils investigation to the building official where required in Sections 1802*A*.2.1 through ~~1802.2.7~~ *1802A.2.8*.

Exception: ~~The building official need not require a foundation or soils investigation where satisfactory data from adjacent areas is available that demonstrates an investigation is not necessary for any of the conditions in Sections 1802.2.1 through 1802.2.6.~~ *Geotechnical reports are not required for one-story, wood-frame and light-steel-frame buildings of Type II or Type V construction and 4,000 square feet (371m^2) or less in floor area, not located within Earthquake Fault Zones or Seismic Hazard Zones as shown in the most recently published maps from the California Division of Mines and Geology (DMG) / California Geological Survey (CGS). Allowable foundation and lateral soil pressure values may be determined from Table 1804A.2.*

1802*A*.2.1 Questionable soil. Where the classification, strength or compressibility of the soil are in doubt or where a load-bearing value superior to that specified in this code is claimed, the building official shall require that the necessary investigation be made. Such investigation shall comply with the provisions of Sections 1802*A*.4 through ~~1802.6~~ *1802A.7.*

1802*A*.2.2 Expansive soils. In areas likely to have expansive soil, the building official shall require soil tests to determine where such soils do exist.

1802*A*.2.3 Ground-water table. A subsurface soil investigation shall be performed to determine whether the existing ground-water table is above or within 5 feet (1524 mm) below the elevation of the lowest floor level where such floor is located below the finished ground level adjacent to the foundation.

Exception: *Not permitted by OSHPD and DSA-SS*. ~~A subsurface soil investigation shall not be required where waterproofing is provided in accordance with Section 1807.~~

1802*A*.2.4 Pile and pier foundations. Pile and pier foundations shall be designed and installed on the basis of a foundation investigation and report as specified in Sections 1802*A*.4 through ~~1802.6~~ *1802A.7* and Section 1808*A*.2.2.

1802*A*.2.5 Rock strata. Where subsurface explorations at the project site indicate variations or doubtful characteristics in the structure of the rock upon which foundations are to be constructed, a sufficient number of borings shall be made to a depth of not less than 10 feet (3048 mm) below the level of the foundations to provide assurance of the soundness of the foundation bed and its load-bearing capacity.

1802*A*.2.6 Seismic Design Category C. Where a structure is determined to be in Seismic Design Category C ~~in accordance with Section 1613~~, an investigation shall be conducted and shall include an evaluation of the following potential hazards resulting from earthquake motions: slope instability, liquefaction and surface rupture due to faulting or lateral spreading.

1802*A*.2.7 Seismic Design Category D, E or F. Where the structure is determined to be in Seismic Design Category D, E or F, in accordance with Section 1613*A*, the soils investigation requirements for Seismic Design Category C, given in Section 1802*A*.2.6, shall be met, in addition to the following. The investigation shall include:

1. A determination of lateral pressures on basement and retaining walls due to earthquake motions.

2. An assessment of potential consequences of any liquefaction and soil strength loss, including estimation of differential settlement, lateral movement or reduction in foundation soil-bearing capacity, and shall address mitigation measures. Such measures shall be given consideration in the design of the structure and can include but are not limited to ground stabilization, selection of appropriate foundation type and depths, selection of appropriate structural systems to accommodate anticipated displacements or any combination of these measures. The potential for liquefaction and soil strength loss shall be evaluated for site peak ground acceleration magnitudes and source characteristics consistent with the design earthquake ground motions. Peak ground acceleration shall be determined from a site-specific study taking into account soil amplification effects, as specified in Chapter 21 of ASCE 7.

Exception: A site-specific study need not be performed, provided that peak ground acceleration equal to $S_{DS}/2.5$ is used, where S_{DS} is determined in accordance with Section ~~21.2.1 of ASCE 7~~ *1613A*.

1802A.2.8 *(Relocated from 1804A.3, Item 8, CBC 2001)* ***High Sulfate Soils.*** *In areas subject to high sulfate soils, an evaluation of the impact on the durability of concrete foundations shall be considered.*

1802*A*.3 Soil classification. Where required, soils shall be classified in accordance with Section 1802*A*.3.1 or 1802*A*.3.2.

1802*A*.3.1 General. For the purposes of this chapter, the definition and classification of soil materials for use in Table 1804*A*.2 shall be in accordance with ASTM D 2487.

1802*A*.3.2 Expansive soils. Soils meeting all four of the following provisions shall be considered expansive, except that tests to show compliance with Items 1, 2 and 3 shall not be required if the test prescribed in Item 4 is conducted:

1. Plasticity index (PI) of 15 or greater, determined in accordance with ASTM D 4318.

2. More than 10 percent of the soil particles pass a No. 200 sieve (75µm), determined in accordance with ASTM D 422.

3. More than 10 percent of the soil particles are less than 5 micrometers in size, determined in accordance with ASTM D 422.

4. Expansion index greater than 20, determined in accordance with ASTM D 4829.

1802*A*.4 Investigation. Soil classification shall be based on observation and any necessary tests of the materials disclosed by borings, test pits or other subsurface exploration made in appropriate locations. Additional studies shall be made as necessary to evaluate slope stability, soil strength, position and adequacy of load-bearing soils, the effect of moisture variation on soil-bearing capacity, compressibility, liquefaction and expansiveness.

1802*A*.4.1 Exploratory boring. The scope of the soil investigation including the number and types of borings or soundings, the equipment used to drill and sample, the in-situ testing equipment and the laboratory testing program shall be determined by a registered design professional.

(Relocated from 1804A.2, CBC 2001) ~~*Whenever it is necessary to make special investigations, sufficient borings or exploration shafts shall be made as deemed necessary by the geotechnical engineer to evaluate the character of the soil under the entire building or structure, except that there*~~ *There shall not be less than one boring or exploration shaft for each 5,000 square feet (465 m^2) of building area at the foundation level with a minimum of two provided for any one building.* ~~*The possibility of liquefaction under seismic disturbance shall be considered in the investigation. If there is a potential for liquefaction, the geotechnical engineer shall report the estimated amount of displacement.*~~ *A boring may be considered to reflect subsurface conditions relevant to more than one building, subject to the approval of the enforcement agency.*

Borings shall be of sufficient size to permit visual examination of the soil in place or, in lieu thereof, cores shall be taken.

Borings shall be of sufficient depth and size to adequately characterize sub-surface conditions.

1802A.5 Soil boring and sampling. The soil boring and sampling procedure and apparatus shall be in accordance with generally accepted engineering practice. The registered design professional shall have a fully qualified representative on the site during all boring and sampling operations.

1802A.6 *(Relocated from 1637A, CBC 2001)* ***Site data*** ~~*FOR HOSPITALS AND STATE-OWNED OR STATE-LEASED ESSENTIAL SERVICES BUILDINGS.*~~

1802A.6.1 *(Relocated from 1637A.1, CBC 2001)* ***Engineering geologic reports.***

1802A.6.1.1 *Geologic and earthquake engineering reports shall be required for all proposed construction.*

EXCEPTIONS:

1. *Reports are not required for one-story, wood-frame and light-steel-frame buildings of Type II or Type V construction and 4,000 square feet (371m^2) or less in floor area, not located within Earthquake Fault Zones or Seismic Hazard Zones as shown in the most recently published maps from California Division of Mines and Geology (DMG) / California Geological Survey (CGS); nonstructural, associated structural or nonrequired structural alterations and incidental structural additions or alterations, and structural repairs for other than earthquake damage.*

2. *A previous report for a specific site may be resubmitted, provided that a reevaluation is made and the report is found to be currently appropriate.*

1802A.6.1.2 *(Relocated from 1637A.1.2, CBC 2001) The purpose of the engineering geologic report shall be to identify geologic and seismic conditions that may require project mitigations. The reports shall contain data which provide an assessment of the nature of the site and potential for earthquake damage based on appropriate investigations of the regional and site geology, project foundation conditions and the potential seismic shaking at the site. The report shall be prepared by a California-certified engineering geologist in consultation with a California-registered geotechnical engineer.* ~~*The engineering geologic report shall not contain design criteria, but shall contain basic data to be used for a preliminary earthquake engineering evaluation of the project.*~~

The preparation of the engineering geologic report shall consider the most recent ~~*Division of Mines and Geology*~~ *DMG / CGS* ~~*Notes 44 and 42*~~ *Note 48; Checklist for the Review of Engineering Geology and Seismology Reports for California Public School, Hospitals, and Essential Services Buildings.* ~~*Guidelines for reparing Engineering Geologic Reports, and Guidelines to Geologic/Seismic Reports, respectively. Upper-bound earthquakes, proposed in the Engineering Geologic Report, must be fully supported by satisfactory data and analysis.*~~ *In addition, the most recent version of DMG / CGS Special Publication 42, Fault Rupture Hazard Zones in California, shall be considered for project sites proposed within an Alquist-Priolo* ~~*special studies zone*~~ *Earthquake Fault Zone. The most recent version of DMG / CGS Special Publication 117, Guidelines for Evaluating and Mitigating Seismic Hazards in California, shall be considered for project sites proposed within a Seismic Hazard Zone. All conclusions shall be fully supported by satisfactory data and analysis.*

The report shall include, but shall not be limited to, the following:

1. *Geologic investigation.*

2. *Evaluation of the known active and potentially active faults, both regional and local.* ~~*including estimates of their upper-bound earthquakes and estimates of the peak ground accelerations at the site resulting from these earthquakes.*~~

3. *Ground-motion parameters, as required by Section 1613A, 1614A & ASCE 7.*

~~3~~ .4. Evaluation of slope stability at or near the site~~, and the liquefaction and settlement potential of the earth materials in the foundation~~.

5. The liquefaction and settlement potential of the earth materials in the foundation.

~~1637A.1.3 The engineering geologic report shall be submitted to the enforcement agency for review and approval. The review shall determine whether potential geologic problems and hazards are adequately identified and described in order to provide a timely completion of the subsequent geotechnical report, described in Section 1637A.2.1. The enforcement agency, with consultation of its advisors, may require additional information, analysis and/or clarification of potential geologic problems affecting the pro posed building site before approval is given. The results of the approved engineering geologic report shall be used as a basis for further investigations for the geotechnical report. Approval of the engineering geologic report by the enforcement agency shall be required prior to the submission of the geotechnical report.~~

~~1637A.2 Geotechnical and Supplemental Ground-response Reports.~~

~~1637A.2.1.2 The geotechnical report shall be submitted to the enforcement agency for review and approval. The review shall determine whether potential geologic hazards and foundation problems have been adequately evaluated. The enforcement agency, with the consultation of its advisors, may require additional information, analysis or clarification of potential geotechnical issues affecting the proposed building site before approving the geotechnical report. Approval of the geotechnical report by the enforcement agency shall be required prior to the approval of the supplemental ground-response report, if required, as described in Section 1637A.2.2. The results of the geotechnical report shall be used as a guide for further investigations for the supplemental ground-response report.~~

1802A.6.2 *(Relocated from 1637A.2.2, CBC 2001)* ***Supplemental ground-response report.*** *If site-specific ground-motion procedures, as set forth in ASCE 7 Chapter 21, or ground-motion time-history analysis, as set forth in ASCE 7 Chapter 16, Section 17.3 or Section 18.2.3,are used for design, then a supplemental ground-response report may be required. All conclusions and ground-motion parameters shall be fully supported by satisfactory data and analysis.*

~~1637A.2.2 Supplemental ground-response report. A supplemental ground-response report may be required, containing aground-motion element and an advanced geotechnical element.~~

1802A.6.2.1 *(Relocated from 1637A.2.2.1, CBC 2001) The ground-motion element shall be prepared by a registered ~~civil~~ geotechnical engineer or geophysicist (depending on the scope of the element), or engineering geologist licensed in the state of California, and having professional specialization in earthquake analyses. The ground-motion element shall present a detailed characterization of earthquake ground motions for the site, which incorporates data given in the geotechnical report. The level of ground motion considered by the ground-motion element shall be as described in ~~Section 1631A.2~~ ASCE 7 Chapter 21. The characterization of ground motion in the ground-motion element shall be given, according to the requirements of the analysis, in terms of:*

~~1. Peak acceleration, bracketed duration and predominant period.~~

~~2.~~ 1. Elastic structural response spectra.

~~3.~~ 2. Time-history plot of predicted ground motion at the site.

~~4.~~ 3. Other analyses in conformance with accepted engineering and seismological practice.

1802A.6.2.2 *(Relocated from 1637A.2.2.2, CBC 2001) The advanced geotechnical element shall contain the results of dynamic geotechnical analyses specified by the approved geotechnical report. Where site response analysis, as set forth in ASCE 7 Section 21.1, is required, the response model shall be fully explained. The input data and assumptions shall be fully documented, and the surface ground motions recommended for design shall be clearly identified.*

The supplemental ground-response report shall be submitted to the enforcement agency for review and approval. The review shall determine whether the ground-motion response evaluations of the site are adequately represented. The enforcement agency, under consultation with its advisors, may require additional information, analysis or clarification of potential ground-response issues reported in the supplemental ground-response report for the proposed building site.

~~1802. 6~~ ***1802A. 7 Geotechnical*** **Reports.** The soil classification and design load-bearing capacity shall be shown on the construction document. Where required by the building official, a written report of the investigation shall be submitted ~~that includes~~. *(Relocated from 1637A.2.1.1, 2001 CBC) The geotechnical report shall provide completed evaluations of the foundation conditions of the site and the potential geologic / seismic hazards affecting the site. The geotechnical report shall include, but shall not be limited to, site-specific evaluations of design criteria related to the nature and extent of foundation materials, groundwater conditions, liquefaction potential, settlement potential and slope stability. The report shall contain the results of the analyses of problem areas identified in the engineering geologic report. The geotechnical report shall incorporate estimates of the characteristics of site ground motion provided in the engineering geologic report.* ~~*The estimates of ground motion shall not be structural design criteria, but shall be provided to characterize the seismic environment of the site, with consideration of the upper-bound earthquakes reported in the engineering geologic report. The ground-motion estimates shall include, but shall not be limited to, peak ground motions and predominant period. The estimates should be derived by accepted methods of current seismological practice and fully documented in the geologic report.*~~

~~*The geotechnical report shall be prepared by a geotechnical engineer registered in the state of California with the advice of the certified engineering geologist and other technical experts, as necessary. The approved engineering geologic report shall be submitted with or as part of the geotechnical report.*~~ *The geotechnical report shall include,* but need not be limited to, the following information:

1. A plot showing the location of test borings and/or excavations.

2. A complete record of the soil samples.

3. A record of the soil profile.

4. Elevation of the water table, if encountered. *Historic high ground water elevations shall be addressed in the report to adequately evaluate liquefaction and settlement potential.*

5. Recommendations for foundation type and design criteria, including but not limited to: bearing capacity of natural or compacted soil; provisions to mitigate the effects of expansive soils; mitigation of the effects of liquefaction, differential settlement and varying soil strength; and the effects of adjacent loads.

6. Expected total and differential settlement.

7. Pile and pier foundation information in accordance with Section 1808*A*.2.2.

8. Special design and construction provisions for footings or foundations founded on expansive soils, as necessary.

9. Compacted fill material properties and testing in accordance with Section 1803*A*.5.

10. *(Relocated from 1804A.3 Item 6, CBC 2001) The report shall consider the effects of stepped footings addressed in Section 1805A.1.*

11. *(Relocated from 1804A.1, CBC 2001) The report shall consider the effects of seismic hazards per Section 1802A.6.*

SECTION 1803*A* - EXCAVATION, GRADING AND FILL

1803*A*.1 Excavations near footings or foundations. Excavations for any purpose shall not remove lateral support from any footing or foundation without first underpinning or protecting the footing or foundation against settlement or lateral translation.

1803*A*.2 Placement of backfill. The excavation outside the foundation shall be backfilled with soil that is free of organic material, construction debris, cobbles and boulders or a controlled low-strength material (CLSM). The backfill

shall be placed in lifts and compacted, in a manner that does not damage the foundation or the waterproofing or dampproofing material.

Exception: Controlled low-strength material need not be compacted.

1803*A*.3 Site grading. The ground immediately adjacent to the foundation shall be sloped away from the building at a slope of not less than one unit vertical in 20 units horizontal (5-percent slope) for a minimum distance of 10 feet (3048 mm) measured perpendicular to the face of the wall. If physical obstructions or lot lines prohibit 10 feet (3048 mm) of horizontal distance, a 5-percent slope shall be provided to an approved alternative method of diverting water away from the foundation. Swales used for this purpose shall be sloped a minimum of 2 percent where located within 10 feet (3048 mm) of the building foundation. Impervious surfaces within 10 feet (3048 mm) of the building foundation shall be sloped a minimum of 2 percent away from the building.

Exception: Where climatic or soil conditions warrant, the slope of the ground away from the building foundation is permitted to be reduced to not less than one unit vertical in 48 units horizontal (2-percent slope).

The procedure used to establish the final ground level adjacent to the foundation shall account for additional settlement of the backfill.

1803*A*.4 Grading and fill in flood hazard areas. In flood hazard areas established in Section 1612*A*.3, grading and / or fill shall not be approved:

1. Unless such fill is placed, compacted and sloped to minimize shifting, slumping and erosion during the rise and fall of flood water and, as applicable, wave action.

2. In floodways, unless it has been demonstrated through hydrologic and hydraulic analyses performed by a registered design professional in accordance with standard engineering practice that the proposed grading or fill, or both, will not result in any increase in flood levels during the occurrence of the design flood.

3. In flood hazard areas subject to high-velocity wave action, unless such fill is conducted and / or placed to avoid diversion of water and waves toward any building or structure.

4. Where design flood elevations are specified but floodways have not been designated, unless it has been demonstrated that the cumulative effect of the proposed flood hazard area encroachment, when combined with all other existing and anticipated flood hazard area encroachment, will not increase the design flood elevation more than 1 foot (305 mm) at any point.

1803*A*.5 Compacted fill material. Where footings will bear on compacted fill material, the compacted fill shall comply with the provisions of an approved report, which shall contain the following:

1. Specifications for the preparation of the site prior to placement of compacted fill material.

2. Specifications for material to be used as compacted fill.

3. Test method to be used to determine the maximum dry density and optimum moisture content of the material to be used as compacted fill.

4. Maximum allowable thickness of each lift of compacted fill material.

5. Field test method for determining the in-place dry density of the compacted fill.

6. Minimum acceptable in-place dry density expressed as a percentage of the maximum dry density determined in accordance with Item 3.

7. Number and frequency of field tests required to determine compliance with Item 6.

   Exception: Compacted fill material less than 12 inches (305 mm) in depth need not comply with an approved report, provided it has been compacted to a minimum of 90 percent Modified Proctor in accordance with ASTM D 1557. The compaction shall be verified by a qualified inspector approved by the building official.

1803*A*.6 Controlled low-strength material (CLSM). Where footings will bear on controlled low-strength material (CLSM), the CLSM shall comply with the provisions of an approved report, which shall contain the following:

1. Specifications for the preparation of the site prior to placement of the CLSM.

2. Specifications for the CLSM.

3. Laboratory or field test method(s) to be used to determine the compressive strength or bearing capacity of the CLSM.

4. Test methods for determining the acceptance of the CLSM in the field.

5. Number and frequency of field tests required to determine compliance with Item 4.

SECTION 1804*A* - ALLOWABLE LOAD-BEARING VALUES OF SOILS

1804*A*.1 Design. The presumptive load-bearing values provided in Table 1804*A*.2 shall be used with the allowable stress design load combinations specified in Section 1605*A*.3.

1804*A*.2 Presumptive load-bearing values. The maximum allowable foundation pressure, lateral pressure or lateral sliding-resistance values for supporting soils near the surface shall not exceed the values specified in Table 1804*A*.2 unless data to substantiate the use of a higher value are submitted and approved.

Presumptive load-bearing values shall apply to materials with similar physical characteristics and dispositions.

Mud, organic silt, organic clays, peat or unprepared fill shall not be assumed to have a presumptive load-bearing capacity unless data to substantiate the use of such a value are submitted.

Exception: A presumptive load-bearing capacity is permitted to be used where the building official deems the load-bearing capacity of mud, organic silt or unprepared fill is adequate for the support of lightweight and temporary structures.

TABLE 1804*A*.2 - ALLOWABLE FOUNDATION AND LATERAL PRESSURE

CLASS OF MATERIALS	ALLOWABLE FOUNDATION PRESSURE (psf)[d]	LATERAL BEARING (psf/f below natural grade)[d]	LATERAL SLIDING	
			Coefficient of friction[a]	Resistance (psf)[b]
1. Crystalline bedrock	12,000	1,200	0.70	—
2. Sedimentary and foliated rock	4,000	400	0.35	—
3. Sandy gravel and/or gravel (GW and GP)	3,000	200	0.35	—
4. Sand, silty sand, clayey sand, silty gravel and clayey gravel (SW, SP, SM, SC, GM and GC)	2,000	150	0.25	—
5. Clay, sandy clay, silty clay, clayey silt, silt and sandy silt (CL, ML, MH and CH)	1,500[c]	100	—	130

For SI: 1 pound per square foot = 0.0479 kPa, 1 pound per square foot per foot = 0.157 kPa/m.

a. Coefficient to be multiplied by the dead load.

b. Lateral sliding resistance value to be multiplied by the contact area, as limited by Section 1804*A*.3.

c. Where the building official determines that in-place soils with an allowable bearing capacity of less than 1,500 psf are likely to be present at the site, the allowable bearing capacity shall be determined by a soils investigation.

d. An increase of one-third is permitted when using the alternate load combinations in Section 1605*A*.3.2 that include wind or earthquake loads.

1804*A*.3 Lateral sliding resistance. The resistance of structural walls to lateral sliding shall be calculated by combining the values derived from the lateral bearing and the lateral sliding resistance shown in Table 1804*A*.2 unless data to substantiate the use of higher values are submitted for approval.

For clay, sandy clay, silty clay and clayey silt, in no case shall the lateral sliding resistance exceed one-half the dead load.

1804*A*.3.1 Increases in allowable lateral sliding resistance. The resistance values derived from the table are permitted to be increased by the tabular value for each additional foot (305 mm) of depth to a maximum of 15 times the tabular value.

Isolated poles for uses such as flagpoles or signs and poles used to support buildings that are not adversely affected by a 0.5 inch (12.7 mm) motion at the ground surface due to short-term lateral loads are permitted to be designed using lateral-bearing values equal to two times the tabular values.

SECTION 1805*A* - FOOTINGS AND FOUNDATIONS

1805*A*.1 General. Footings and foundations shall be designed and constructed in accordance with Sections 1805*A*.1 through 1805*A*.9. Footings and foundations shall be built on undisturbed soil, compacted fill material or CLSM. Compacted fill material shall be placed in accordance with Section 1803*A*.5. CLSM shall be placed in accordance with Section 1803*A*.6.

The top surface of footings shall be level. The bottom surface of footings is permitted to have a slope not exceeding one unit vertical in 10 units horizontal (10-percent slope). Footings shall be stepped where it is necessary to change the elevation of the top surface of the footing or where the surface of the ground slopes more than one unit vertical in 10 units horizontal (10-percent slope).

(Relocated from 1806A.4, CBC 2001) Individual steps in continuous footings shall not exceed 18 inches (457 mm) in height and the slope of a series of such steps shall not exceed 1 unit vertical to 2 units horizontal (50% slope) unless otherwise recommended by a soils report. The steps shall be detailed on the drawings. The local effects due to the discontinuity of the steps shall be considered in the design of the foundation.

1805*A*.2 Depth of footings. The minimum depth of footings below the undisturbed ground surface shall be 12 inches (305 mm). Where applicable, the depth of footings shall also conform to Sections 1805*A*.2.1 through 1805*A*.2.3.

1805*A*.2.1 Frost protection. Except where otherwise protected from frost, foundation walls, piers and other permanent supports of buildings and structures shall be protected by one or more of the following methods:

1. Extending below the frost line of the locality;

2. Constructing in accordance with ASCE 32; or

3. Erecting on solid rock.

Exception: Free-standing buildings meeting all of the following conditions shall not be required to be protected:

1. Classified in Occupancy Category I, in accordance with Section 1604*A*.5;

2. Area of 600 square feet (56 m^2) or less for light-frame construction or 400 square feet (37 m^2) or less for other than light-frame construction; and

3. Eave height of 10 feet (3048 mm) or less.

Footings shall not bear on frozen soil unless such frozen condition is of a permanent character.

1805*A*.2.2 Isolated footings. Footings on granular soil shall be so located that the line drawn between the lower edges of adjoining footings shall not have a slope steeper than 30 degrees (0.52 rad) with the horizontal, unless the material supporting the higher footing is braced or retained or otherwise laterally supported in an approved manner or a greater slope has been properly established by engineering analysis.

1805*A*.2.3 Shifting or moving soils. Where it is known that the shallow subsoils are of a shifting or moving character, footings shall be carried to a sufficient depth to ensure stability.

1805*A*.3 Footings on or adjacent to slopes. The placement of buildings and structures on or adjacent to slopes steeper than one unit vertical in three units horizontal (33.3-percent slope) shall conform to Sections 1805*A*.3.1 through 1805*A*.3.5.

1805*A*.3.1 Building clearance from ascending slopes. In general, buildings below slopes shall be set a sufficient distance from the slope to provide protection from slope drainage, erosion and shallow failures. Except as provided for in Section 1805*A*.3.5 and Figure 1805*A*.3.1, the following criteria will be assumed to provide this protection. Where the existing slope is steeper than one unit vertical in one unit horizontal (100-percent slope), the toe of the slope shall be assumed to be at the intersection of a horizontal plane drawn from the top of the foundation and a plane drawn tangent to the slope at an angle of 45 degrees (0.79 rad) to the horizontal. Where a retaining wall is constructed at the toe of the slope, the height of the slope shall be measured from the top of the wall to the top of the slope.

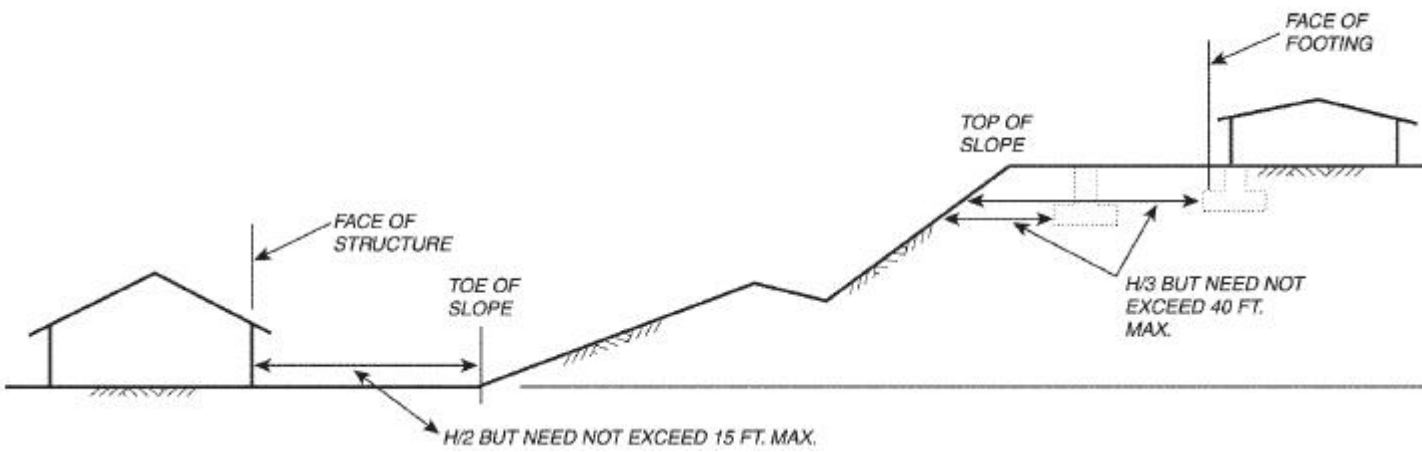

For SI: 1 foot = 304.8 mm.

FIGURE 1805*A*.3.1 - FOUNDATION CLEARANCES FROM SLOPES

1805*A*.3.2 Footing setback from descending slope surface. Footings on or adjacent to slope surfaces shall be founded in firm material with an embedment and set back from the slope surface sufficient to provide vertical and

lateral support for the footing without detrimental settlement. Except as provided for in Section 1805*A*.3.5 and Figure 1805*A*.3.1, the following setback is deemed adequate to meet the criteria. Where the slope is steeper than 1 unit vertical in 1 unit horizontal (100-percent slope), the required setback shall be measured from an imaginary plane 45 degrees (0.79 rad) to the horizontal, projected upward from the toe of the slope.

1805*A*.3.3 Pools. The setback between pools regulated by this code and slopes shall be equal to one-half the building footing setback distance required by this section. That portion of the pool wall within a horizontal distance of 7 feet (2134 mm) from the top of the slope shall be capable of supporting the water in the pool without soil support.

1805*A*.3.4 Foundation elevation. On graded sites, the top of any exterior foundation shall extend above the elevation of the street gutter at point of discharge or the inlet of an approved drainage device a minimum of 12 inches (305 mm) plus 2 percent. Alternate elevations are permitted subject to the approval of the building official, provided it can be demonstrated that required drainage to the point of discharge and away from the structure is provided at all locations on the site.

1805*A*.3.5 Alternate setback and clearance. Alternate setbacks and clearances are permitted, subject to the approval of the building official. The building official is permitted to require an investigation and recommendation of a registered design professional to demonstrate that the intent of this section has been satisfied. Such an investigation shall include consideration of material, height of slope, slope gradient, load intensity and erosion characteristics of slope material.

1805*A*.4 Footings. Footings shall be designed and constructed in accordance with Sections 1805*A*.4.1 through 1805*A*.4.6.

1805*A*.4.1 Design. Footings shall be so designed that the allowable bearing capacity of the soil is not exceeded, and that differential settlement is minimized. The minimum width of footings shall be 12 inches (305 mm).

Footings in areas with expansive soils shall be designed in accordance with the provisions of Section 1805*A*.8.

(Relocated from 1806A.2, CBC 2001) The enforcing agency may require an ~~elastic~~ analysis at footing and grade beam elements to determine subgrade deformations in order to evaluate their effect on the superstructure drift values in Chapter 16A.

1805*A*.4.1.1 Design loads. Footings shall be designed for the most unfavorable effects due to the combinations of loads specified in Section 1605*A*.2 or 1605*A*.3. The dead load is permitted to include the weight of foundations, footings and overlying fill. Reduced live loads, as specified in Sections 1607*A*.9 and 1607*A*.11, are permitted to be used in the design of footings.

1805*A*.4.1.2 Vibratory loads. Where machinery operations or other vibrations are transmitted through the foundation, consideration shall be given in the footing design to prevent detrimental disturbances of the soil.

1805*A*.4.2 Concrete footings. The design, materials and construction of concrete footings shall comply with Sections 1805*A*.4.2.1 through 1805*A*.4.2.6 and the provisions of Chapter 19*A*.

Exception: Where a specific design is not provided, concrete footings supporting walls of light-frame construction are permitted to be designed in accordance with Table 1805*A*.4.2.

TABLE 1805*A*.4.2 - FOOTINGS SUPPORTING WALLS OF LIGHT-FRAME CONSTRUCTION[a, b, c, d, e]

NUMBER OF FLOORS SUPPORTED BY THE FOOTING[f]	WIDTH OF FOOTING (inches)	THICKNESS OF FOOTING (inches)
1	12	6
2	15	6
3	18	8[g]

For SI: 1 inch = 25.4 mm, 1 foot = 304.8 mm.

a. Depth of footings shall be in accordance with Section 1805*A*.2.

b. The ground under the floor is permitted to be excavated to the elevation of the top of the footing.

c. *(Relocated from Table 18A-I-C, CBC 2001) Not permitted by OSHPD and DSA-SS.* ~~Interior stud-bearing walls are permitted to be supported by isolated footings. The footing width and length shall be twice the width shown in this table, and footings shall be spaced not more than 6 feet on center.~~

d. See Section 1908*A* for additional requirements for footings of structures assigned to Seismic Design Category ~~C,~~ D, E or F.

e. For thickness of foundation walls, see Section 1805*A*.5.

f. Footings are permitted to support a roof in addition to the stipulated number of floors. Footings supporting roof only shall be as required for supporting one floor.

g. Plain concrete footings for Group R-3 occupancies are permitted to be 6 inches thick.

1805*A*.4.2.1 Concrete strength. Concrete in footings shall have a specified compressive strength (f'_c) of not less than 2,500 pounds per square inch (psi) (17 237 kPa) at 28 days.

1805*A*.4.2.2 Footing seismic ties. Where a structure is assigned to Seismic Design Category D, E or F in accordance with Section 1613*A*, individual spread footings founded on soil defined in Section 1613*A*.5.2 as Site Class E or F shall be interconnected by ties. Ties shall be capable of carrying, in tension or compression, a force equal to the product of the larger footing load times the seismic coefficient, S_{DS}, divided by 10 unless it is demonstrated that equivalent restraint is provided by reinforced concrete beams within slabs on grade or reinforced concrete slabs on grade.

1805*A*.4.2.3 Plain concrete footings. *Not permitted by OSHPD and DSA-SS.* ~~The edge thickness of plain concrete footings supporting walls of other than light-frame construction shall not be less than 8 inches (203 mm) where placed on soil.~~

> ~~**Exception:** For plain concrete footings supporting Group R-3 occupancies, the edge thickness is permitted to be 6 inches (152 mm), provided that the footing does not extend beyond a distance greater than the thickness of the footing on either side of the supported wall.~~

1805*A*.4.2.4 Placement of concrete. Concrete footings shall not be placed through water unless a tremie or other method approved by the building official is used. Where placed under or in the presence of water, the concrete shall be deposited by approved means to ensure minimum segregation of the mix and negligible turbulence of the water.

1805*A*.4.2.5 Protection of concrete. Concrete footings shall be protected from freezing during depositing and for a period of not less than five days thereafter. Water shall not be allowed to flow through the deposited concrete.

1805*A*.4.2.6 Forming of concrete. Concrete footings are permitted to be cast against the earth where, in the opinion of the building official, soil conditions do not require forming. Where forming is required, it shall be in accordance with Chapter 6 of ACI 318.

(Relocated from 1806A.1, CBC 2001) The horizontal dimensions of unformed concrete footings shall be increased 1 inch (25 mm) at every vertical surface at which concrete is placed directly against the soil.

1805*A*.4.3 Masonry-unit footings. *Not permitted by OSHPD and DSA-SS.* ~~The design, materials and construction of masonry-unit footings shall comply with Sections 1805.4.3.1 and 1805.4.3.2, and the provisions of Chapter 21.~~

> ~~Exception: Where a specific design is not provided, masonry-unit footings supporting walls of light-frame construction are permitted to be designed in accordance with Table 1805.4.2.~~

~~1805.4.3.1 Dimensions. Masonry-unit footings shall be laid in Type M or S mortar complying with Section 2103.8 and the depth shall not be less than twice the projection beyond the wall, pier or column. The width shall not be less than 8 inches (203 mm) wider than the wall supported thereon.~~

~~1805.4.3.2 Offsets. The maximum offset of each course in brick foundation walls stepped up from the footings shall be 1.5 inches (38 mm) where laid in single courses, and 3 inches (76 mm) where laid in double courses.~~

1805*A*.4.4 Steel grillage footings. Grillage footings of structural steel shapes shall be separated with approved steel spacers and be entirely encased in concrete with at least 6 inches (152 mm) on the bottom and at least 4 inches (102 mm) at all other points. The spaces between the shapes shall be completely filled with concrete or cement grout.

1805*A*.4.5 Timber footings. *Not permitted by OSHPD and DSA-SS.* ~~Timber footings are permitted for buildings of Type V construction and as otherwise approved by the building official. Such footings shall be treated in accordance with AWPA U1 (Commodity Specification A, Use Category 4B). Treated timbers are not required where placed entirely below permanent water level or where used as capping for wood piles that project above the water level over submerged or marsh lands. The compressive stresses perpendicular to the grain in untreated timber footings supported upon treated piles shall not exceed 70 percent of the allowable stresses for the species and grade of timber as specified in the AF&PA NDS.~~

1805*A*.4.6 Wood foundations. *Not permitted by OSHPD and DSA-SS.* ~~Wood foundation systems shall be designed and installed in accordance with AF&PA Technical Report No. 7. Lumber and plywood shall be treated in accordance with AWPA U1 (Commodity Specification A, Use Category 4B and Section 5.2) and shall be identified in accordance with Section 2303.1.8.1.~~

1805A.4.7 *(Relocated from 1806A.11, CBC 2001)* ***Pipes and Trenches.*** *Unless otherwise recommended by the soils report, open or backfilled trenches parallel with a footing shall not be below a plane having a downward slope of 1 unit vertical to 2 units horizontal (50% slope) from a line 9 inches (229 mm) above the bottom edge of the footing, and not closer than 18 inches (457 mm) from the face of such footing.*

Where pipes cross under footings, the footings shall be specially designed. Pipe sleeves shall be provided where pipes cross through footings or footing walls and sleeve clearances shall provide for possible footing settlement, but not less than 1 inch (25 mm) all around pipe.

1805*A*.5 Foundation walls. Concrete and masonry foundation walls shall be designed in accordance with Chapter 19*A* or 21*A*, respectively. ~~Foundation walls that are laterally supported at the top and bottom and within the parameters of Tables 1805.5(1) through 1805.5(5) are permitted to be designed and constructed in accordance with Sections 1805.5.1 through 1805.5.5.~~

~~**TABLE 1805.5(1) - PLAIN MASONRY FOUNDATION WALLS**[a, b, c]~~

~~MAXIMUM WALL HEIGHT (feet)~~	~~MAXIMUM UNBALANCED BACKFILL HEIGHT[d] (feet)~~	~~MINIMUM NOMINAL WALL THICKNESS (inches)~~		
		~~Soil classes and lateral soil load[a] (psf per foot below natural grade)~~		
		~~GW, GP, SW and SP soils 30~~	~~GM, GC, SM, SM-SC and ML soils 45~~	~~SC, ML-CL and Inorganic CL soils 60~~
~~7~~	~~4 (or less)~~	~~8~~	~~8~~	~~8~~
	~~5~~	~~8~~	~~10~~	~~10~~
	~~6~~	~~10~~	~~12~~	~~10 (solid[e])~~
	~~7~~	~~12~~	~~10 (solid[e])~~	~~10 (solid[e])~~
~~8~~	~~4 (or less)~~	~~8~~	~~8~~	~~8~~
	~~5~~	~~8~~	~~10~~	~~12~~
	~~6~~	~~10~~	~~12~~	~~12 (solid[e])~~
	~~7~~	~~12~~	~~12 (solid[e])~~	~~Note d~~
	~~8~~	~~10 (solid[e])~~	~~12 (solid[e])~~	~~Note d~~
~~9~~	~~4 (or less)~~	~~8~~	~~8~~	~~8~~
	~~5~~	~~8~~	~~10~~	~~12~~

	~~6~~ ~~7~~ ~~8~~ ~~9~~	~~12~~ ~~12 (solid[e])~~ ~~12 (solid[e])~~ ~~Note d~~	~~12~~ ~~12 (solid[e])~~ ~~Note d~~ ~~Note d~~	~~12 (solid[e])~~ ~~Note d~~ ~~Note d~~ ~~Note d~~

~~For SI: 1 inch = 25.4 mm, 1 foot = 304.8 mm, 1 pound per square foot per foot = 0.157 kPa/m.~~

~~a. For design lateral soil loads, see Section 1610. Soil classes are in accordance with the Unified Soil Classification System and design lateral soil loads are for moist soil conditions without hydrostatic pressure.~~

~~b. Provisions for this table are based on construction requirements specified in Section 1805.5.2.2.~~

~~c. Solid grouted hollow units or solid masonry units.~~

~~d. A design in compliance with Chapter 21 or reinforcement in accordance with Table 1805.5(2) is required.~~

~~e. For height of unbalanced backfill, see Section 1805.5.1.2.~~

~~TABLE 1805.5(2) - 8-INCH MASONRY FOUNDATION WALLS WITH REINFORCEMENT WHERE d[3] 5 INCHES[a, b, c]~~

~~MAXIMUM WALL HEIGHT (feet-inches)~~	~~MAXIMUM UNBALANCED BACKFILL HEIGHT[d] (feet-inches)~~	~~VERTICAL REINFORCEMENT~~		
		~~Soil classes and lateral soil load[a] (psf per foot below natural grade)~~		
		~~GW, GP, SW and SP soils 30~~	~~GM, GC, SM, SM-SC and ML soils 45~~	~~SC, ML-CL and Inorganic CL soils 60~~
~~7-4~~	~~4-0 (or less)~~	~~#4 at 48″ o.c.~~	~~#4 at 48″ o.c.~~	~~#4 at 48″ o.c.~~
	~~5-0~~	~~#4 at 48″ o.c.~~	~~#4 at 48″ o.c.~~	~~#4 at 48″ o.c.~~
	~~6-0~~	~~#4 at 48″ o.c.~~	~~#5 at 48″ o.c.~~	~~#5 at 48″ o.c.~~
	~~7-4~~	~~#5 at 48″ o.c.~~	~~#6 at 48″ o.c.~~	~~#7 at 48″ o.c.~~
~~8-0~~	~~4-0 (or less)~~	~~#4 at 48″ o.c.~~	~~#4 at 48″ o.c.~~	~~#4 at 48″ o.c.~~
	~~5-0~~	~~#4 at 48″ o.c.~~	~~#4 at 48″ o.c.~~	~~#4 at 48″ o.c.~~
	~~6-0~~	~~#4 at 48″ o.c.~~	~~#5 at 48″ o.c.~~	~~#5 at 48″ o.c.~~
	~~7-0~~	~~#5 at 48″ o.c.~~	~~#6 at 48″ o.c.~~	~~#7 at 48″ o.c.~~
	~~8-0~~	~~#5 at 48″ o.c.~~	~~#6 at 48″ o.c.~~	~~#7 at 48″ o.c.~~
~~8-8~~	~~4-0 (or less)~~	~~#4 at 48″ o.c.~~	~~#4 at 48″ o.c.~~	~~#4 at 48″ o.c.~~
	~~5-0~~	~~#4 at 48″ o.c.~~	~~#4 at 48″ o.c.~~	~~#5 at 48″ o.c.~~
	~~6-0~~	~~#4 at 48″ o.c.~~	~~#5 at 48″ o.c.~~	~~#6 at 48″ o.c.~~
	~~7-0~~	~~#5 at 48″ o.c.~~	~~#6 at 48″ o.c.~~	~~#7 at 48″ o.c.~~
	~~8-8~~	~~#6 at 48″ o.c.~~	~~#7 at 48″ o.c.~~	~~#8 at 48″ o.c.~~
~~9-4~~	~~4-0 (or less)~~	~~#4 at 48″ o.c.~~	~~#4 at 48″ o.c.~~	~~#4 at 48″ o.c.~~
	~~5-0~~	~~#4 at 48″ o.c.~~	~~#4 at 48″ o.c.~~	~~#5 at 48″ o.c.~~
	~~6-0~~	~~#4 at 48″ o.c.~~	~~#5 at 48″ o.c.~~	~~#6 at 48″ o.c.~~
	~~7-0~~	~~#5 at 48″ o.c.~~	~~#6 at 48″ o.c.~~	~~#7 at 48″ o.c.~~
	~~8-0~~	~~#6 at 48″ o.c.~~	~~#7 at 48″ o.c.~~	~~#8 at 48″ o.c.~~

	9-4	#7 at 48″ o.c.	#8 at 48″ o.c.	#9 at 48″ o.c.
10-0	4-0 (or less)	#4 at 48″ o.c.	#4 at 48″ o.c.	#4 at 48″ o.c.
	5-0	#4 at 48″ o.c.	#4 at 48″ o.c.	#5 at 48″ o.c.
	6-0	#4 at 48″ o.c.	#5 at 48″ o.c.	#6 at 48″ o.c.
	7-0	#5 at 48″ o.c.	#6 at 48″ o.c.	#7 at 48″ o.c.
	8-0	#6 at 48″ o.c.	#7 at 48″ o.c.	#8 at 48″ o.c.
	9-0	#7 at 48″ o.c.	#8 at 48″ o.c.	#9 at 48″ o.c.
	10-0	#7 at 48″ o.c.	#9 at 48″ o.c.	#9 at 48″ o.c.

For SI: 1 inch = 25.4 mm, 1 foot = 304.8 mm, 1 pound per square foot per foot = 0.157 kPa/m.

a. For design lateral soil loads, see Section 1610. Soil classes are in accordance with the Unified Soil Classification System and design lateral soil loads are for moist soil conditions without hydrostatic pressure.

b. Provisions for this table are based on construction requirements specified in Section 1805.5.2.2.

c. For alternative reinforcement, see Section 1805.5.3.

d. For height of unbalanced backfill, see Section 1805.5.1.2.

TABLE 1805.5(3) - 10-INCH MASONRY FOUNDATION WALLS WITH REINFORCEMENT WHERE d[3] 6.75 INCHES[a, b, c]

MAXIMUM WALL HEIGHT (feet-inches)	MAXIMUM UNBALANCED BACKFILL HEIGHT[d] (feet-inches)	VERTICAL REINFORCEMENT		
		Soil classes and lateral soil load[a] (psf per foot below natural grade)		
		GW, GP, SW and SP soils 30	GM, GC, SM, SM-SC and ML soils 45	SC, ML-CL and Inorganic CL soils 60
7-4	4-0 (or less)	#4 at 56″ o.c.	#4 at 56″ o.c.	#4 at 56″ o.c.
	5-0	#4 at 56″ o.c.	#4 at 56″ o.c.	#4 at 56″ o.c.
	6-0	#4 at 56″ o.c.	#4 at 56″ o.c.	#5 at 56″ o.c.
	7-4	#4 at 56″ o.c.	#5 at 56″ o.c.	#6 at 56″ o.c.
8-0	4-0 (or less)	#4 at 56″ o.c.	#4 at 56″ o.c.	#4 at 56″ o.c.
	5-0	#4 at 56″ o.c.	#4 at 56″ o.c.	#4 at 56″ o.c.
	6-0	#4 at 56″ o.c.	#4 at 56″ o.c.	#5 at 56″ o.c.
	7-0	#4 at 56″ o.c.	#5 at 56″ o.c.	#6 at 56″ o.c.
	8-0	#5 at 56″ o.c.	#6 at 56″ o.c.	#7 at 56″ o.c.
8-8	4-0 (or less)	#4 at 56″ o.c.	#4 at 56″ o.c.	#4 at 56″ o.c.
	5-0	#4 at 56″ o.c.	#4 at 56″ o.c.	#4 at 56″ o.c.
	6-0	#4 at 56″ o.c.	#4 at 56″ o.c.	#5 at 56″ o.c.
	7-0	#4 at 56″ o.c.	#5 at 56″ o.c.	#6 at 56″ o.c.
	8-8	#5 at 56″ o.c.	#7 at 56″ o.c.	#8 at 56″ o.c.
9-4	4-0 (or less)	#4 at 56″ o.c.	#4 at 56″ o.c.	#4 at 56″ o.c.
	5-0	#4 at 56″ o.c.	#4 at 56″ o.c.	#4 at 56″ o.c.
	6-0	#4 at 56″ o.c.	#5 at 56″ o.c.	#5 at 56″ o.c.

	7-0	#4 at 56″ o.c.	#5 at 56″ o.c.	#6 at 56″ o.c.
	8-0	#5 at 56″ o.c.	#6 at 56″ o.c.	#7 at 56″ o.c.
	9-4	#6 at 56″ o.c.	#7 at 56″ o.c.	#8 at 56″ o.c.
10-0	4-0 (or less)	#4 at 56″ o.c.	#4 at 56″ o.c.	#4 at 56″ o.c.
	5-0	#4 at 56″ o.c.	#4 at 56″ o.c.	#4 at 56″ o.c.
	6-0	#4 at 56″ o.c.	#5 at 56″ o.c.	#5 at 56″ o.c.
	7-0	#5 at 56″ o.c.	#6 at 56″ o.c.	#7 at 56″ o.c.
	8-0	#5 at 56″ o.c.	#7 at 56″ o.c.	#8 at 56″ o.c.
	9-0	#6 at 56″ o.c.	#7 at 56″ o.c.	#9 at 56″ o.c.
	10-0	#7 at 56″ o.c.	#8 at 56″ o.c.	#9 at 56″ o.c.

For SI: 1 inch = 25.4 mm, 1 foot = 304.8 mm, 1 pound per square foot per foot = 0.157 kPa/m.

a. For design lateral soil loads, see Section 1610. Soil classes are in accordance with the Unified Soil Classification System and design lateral soil loads are for moist soil conditions without hydrostatic pressure.

b. Provisions for this table are based on construction requirements specified in Section 1805.5.2.2.

c. For alternative reinforcement, see Section 1805.5.3.

d. For height of unbalanced fill, see Section 1805.5.1.2.

TABLE 1805.5(4) - 12-INCH MASONRY FOUNDATION WALLS WITH REINFORCEMENT WHERE d[3] 8.75 INCHES[a, b, c]

MAXIMUM WALL HEIGHT (feet-inches)	MAXIMUM UNBALANCED BACKFILL HEIGHT[d] (feet-inches)	VERTICAL REINFORCEMENT		
		Soil classes and lateral soil load[a] (psf per foot below natural grade)		
		GW, GP, SW and SP soils 30	GM, GC, SM, SM-SC and ML soils 45	SC, ML-CL and Inorganic CL soils 60
7-4	4-0 (or less)	#4 at 72″ o.c.	#4 at 72″ o.c.	#4 at 72″ o.c.
	5-0	#4 at 72″ o.c.	#4 at 72″ o.c.	#4 at 72″ o.c.
	6-0	#4 at 72″ o.c.	#4 at 72″ o.c.	#5 at 72″ o.c.
	7-4	#4 at 72″ o.c.	#5 at 72″ o.c.	#6 at 72″ o.c.
8-0	4-0 (or less)	#4 at 72″ o.c.	#4 at 72″ o.c.	#4 at 72″ o.c.
	5-0	#4 at 72″ o.c.	#4 at 72″ o.c.	#4 at 72″ o.c.
	6-0	#4 at 72″ o.c.	#4 at 72″ o.c.	#5 at 72″ o.c.
	7-0	#4 at 72″ o.c.	#5 at 72″ o.c.	#6 at 72″ o.c.
	8-0	#5 at 72″ o.c.	#6 at 72″ o.c.	#7 at 72″ o.c.
8-8	4-0 (or less)	#4 at 72″ o.c.	#4 at 72″ o.c.	#4 at 72″ o.c.
	5-0	#4 at 72″ o.c.	#4 at 72″ o.c.	#4 at 72″ o.c.
	6-0	#4 at 72″ o.c.	#4 at 72″ o.c.	#5 at 72″ o.c.
	7-0	#4 at 72″ o.c.	#5 at 72″ o.c.	#6 at 72″ o.c.
	8-8	#5 at 72″ o.c.	#7 at 72″ o.c.	#8 at 72″ o.c.
9-4	4-0 (or less)	#4 at 72″ o.c.	#4 at 72″ o.c.	#4 at 72″ o.c.
	5-0	#4 at 72″ o.c.	#4 at 72″ o.c.	#4 at 72″ o.c.
	6-0	#4 at 72″ o.c.	#5 at 72″ o.c.	#5 at 72″ o.c.

	7-0	#4 at 72″ o.c.	#5 at 72″ o.c.	#6 at 72″ o.c.
	8-0	#5 at 72″ o.c.	#6 at 72″ o.c.	#7 at 72″ o.c.
	9-4	#6 at 72″ o.c.	#7 at 72″ o.c.	#8 at 72″ o.c.
10-0	4-0 (or less)	#4 at 72″ o.c.	#4 at 72″ o.c.	#4 at 72″ o.c.
	5-0	#4 at 72″ o.c.	#4 at 72″ o.c.	#4 at 72″ o.c.
	6-0	#4 at 72″ o.c.	#5 at 72″ o.c.	#5 at 72″ o.c.
	7-0	#4 at 72″ o.c.	#6 at 72″ o.c.	#6 at 72″ o.c.
	8-0	#5 at 72″ o.c.	#6 at 72″ o.c.	#7 at 72″ o.c.
	9-0	#6 at 72″ o.c.	#7 at 72″ o.c.	#8 at 72″ o.c.
	10-0	#7 at 72″ o.c.	#8 at 72″ o.c.	#9 at 72″ o.c.

For SI: 1 inch = 25.4 mm, 1 foot = 304.8 mm, 1 pound per square foot per foot = 0.157 kPa/m.

a. For design lateral soil loads, see Section 1610. Soil classes are in accordance with the Unified Soil Classification System and design lateral soil loads are for moist soil conditions without hydrostatic pressure.

b. Provisions for this table are based on construction requirements specified in Section 1805.5.2.2.

c. For alternative reinforcement, see Section 1805.5.3.

d. For height of unbalanced backfill, see Section 1805.5.1.2.

TABLE 1805.5(5) - CONCRETE FOUNDATION WALLS[b, c]

MAXIMUM WALL HEIGHT (feet)	MAXIMUM UNBALANCED BACKFILL HEIGHT[e] (feet)	VERTICAL REINFORCEMENT AND SPACING (inches)								
		Design lateral soil load[a] (psf per foot of depth)								
		30			45			60		
		Minimum wall thickness (inches)								
		7.5	9.5	11.5	7.5	9.5	11.5	7.5	9.5	11.5
5	4	PC	PC	PC	PC	PC	PC	PC	PC	PC
	5	PC	PC	PC	PC	PC	PC	PC	PC	PC
6	4	PC	PC	PC	PC	PC	PC	PC	PC	PC
	5	PC	PC	PC	PC	PC	PC	PC	PC	PC
	6	PC	PC	PC	PC	PC	PC	PC	PC	PC
7	4	PC	PC	PC	PC	PC	PC	PC	PC	PC
	5	PC	PC	PC	PC	PC	PC	PC	PC	PC
	6	PC	PC	PC	PC	PC	PC	#5 at 48″	PC	PC
	7	PC	PC	PC	#5 at 46″	PC	PC	#6 at 48″	PC	PC
8	4	PC	PC	PC	PC	PC	PC	PC	PC	PC
	5	PC	PC	PC	PC	PC	PC	PC	PC	PC
	6	PC	PC	PC	PC	PC	PC	#5 at 43″	PC	PC
	7	PC	PC	PC	#5 at 41″	PC	PC	#6 at 43″	PC	PC
	8	#5 at	PC	PC	#6 at	PC	PC	#6 at	#6 at	PC

		~~47″~~			~~43″~~			~~32″~~	~~44″~~	
~~9~~	~~4~~	~~PC~~	~~PC~~	~~PC~~	~~PC~~	~~PC~~	~~PC~~	~~PC~~	~~PC~~	~~PC~~
	~~5~~	~~PC~~	~~PC~~	~~PC~~	~~PC~~	~~PC~~	~~PC~~	~~PC~~	~~PC~~	~~PC~~
	~~6~~	~~PC~~	~~PC~~	~~PC~~	~~PC~~	~~PC~~	~~PC~~	~~#5 at 39″~~	~~PC~~	~~PC~~
	~~7~~	~~PC~~	~~PC~~	~~PC~~	~~#5 at 37″~~	~~PC~~	~~PC~~	~~#6 at 38″~~	~~#5 at 37″~~	~~PC~~
	~~8~~	~~#5 at 41″~~	~~PC~~	~~PC~~	~~#6 at 38″~~	~~#5 at 37″~~	~~PC~~	~~#7 at 39″~~	~~#6 at 39″~~	~~#4 at 48″~~
	~~9[d]~~	~~#6 at 46″~~	~~PC~~	~~PC~~	~~#7 at 41″~~	~~#6 at 41″~~	~~PC~~	~~#7 at 31″~~	~~#7 at 41″~~	~~#6 at 39″~~
~~10~~	~~4~~	~~PC~~	~~PC~~	~~PC~~	~~PC~~	~~PC~~	~~PC~~	~~PC~~	~~PC~~	~~PC~~
	~~5~~	~~PC~~	~~PC~~	~~PC~~	~~PC~~	~~PC~~	~~PC~~	~~PC~~	~~PC~~	~~PC~~
	~~6~~	~~PC~~	~~PC~~	~~PC~~	~~PC~~	~~PC~~	~~PC~~	~~#5 at 37″~~	~~PC~~	~~PC~~
	~~7~~	~~PC~~	~~PC~~	~~PC~~	~~#6 at 48″~~	~~PC~~	~~PC~~	~~#6 at 35″~~	~~#6 at 48″~~	~~PC~~
	~~8~~	~~#5 at 38″~~	~~PC~~	~~PC~~	~~#7 at 47″~~	~~#6 at 47″~~	~~PC~~	~~#7 at 35″~~	~~#7 at 48″~~	~~#6 at 45″~~
	~~9[d]~~	~~#6 at 41″~~	~~#4 at 48″~~	~~PC~~	~~#7 at 37″~~	~~#7 at 48″~~	~~#4 at 48″~~	~~#6 at 22″~~	~~#7 at 37″~~	~~#7 at 47″~~
	~~10[d]~~	~~#7 at 45″~~	~~#6 at 45″~~	~~PC~~	~~#7 at 31″~~	~~#7 at 40″~~	~~#6 at 38″~~	~~#6 at 22″~~	~~#7 at 30″~~	~~#7 at 38″~~

~~For SI: 1 inch = 25.4 mm, 1 foot = 304.8 mm, 1 pound per square foot = 0.157 kPa/m.~~

~~a. For design lateral soil loads for different classes of soil, see Section 1610.~~

~~b. Provisions for this table are based on construction requirements specified in Section 1805.5.2.1.~~

~~c. "PC" means plain concrete.~~

~~d. Where design lateral soil loads from Table 1610.1 are used, the requirements for 30 and 45 psf per foot of depth are not applicable. See Section 1610.~~

~~e. For height of unbalanced backfill, see Section 1805.5.1.2.~~

~~**1805.5.1 Foundation wall thickness.** The minimum thickness of concrete and masonry foundation walls shall comply with Sections 1805.5.1.1 through 1805.5.1.3.~~

~~**1805.5.1.1 Thickness at top of foundation wall.** The thickness of foundation walls shall not be less than the thickness of the wall supported, except that foundation walls of at least 8-inch (203 mm) nominal width are permitted to support brick-veneered frame walls and 10-inch-wide (254 mm) cavity walls provided the requirements of Section 1805.5.1.2 are met. Corbeling of masonry shall be in accordance with Section 2104.2. Where an 8-inch (203 mm) wall is corbeled, the top corbel shall not extend higher than the bottom of the floor framing and shall be a full course of headers at least 6 inches (152 mm) in length or the top course bed joint shall be tied to the vertical wall projection. The tie shall be W2.8 (4.8 mm) and spaced at a maximum horizontal distance of 36 inches (914 mm); the hollow space behind the corbelled masonry shall be filled with mortar or grout.~~

~~**1805.5.1.2 Thickness based on soil loads, unbalanced backfill height and wall height.** The thickness of foundation walls shall comply with the requirements of Table 1805.5(5) for concrete walls, Table 1805.5(1) for plain masonry walls or Table 1805.5(2), 1805.5(3) or 1805.5(4) for masonry walls with reinforcement.~~

~~When using the tables, masonry shall be laid in running bond and the mortar shall be Type M or S.~~

~~Unbalanced backfill height is the difference in height between the exterior finish ground level and the lower of the top of the concrete footing that supports the foundation wall or the interior finish ground level. Where an interior concrete slab on grade is provided and is in contact with the interior surface of the foundation wall, the unbalanced backfill height is permitted to be measured from the exterior finish ground level to the top of the interior concrete slab.~~

~~**1805.5.1.3 Rubble stone.** Foundation walls of rough or random rubble stone shall not be less than 16 inches (406 mm) thick. Rubble stone shall not be used for foundations for structures in Seismic Design Category C, D, E or F.~~

~~**1805.5.2 Foundation wall materials.** Concrete foundation walls constructed in accordance with Table 1805.5(5) shall comply with Section 1805.5.2.1. Masonry foundation walls constructed in accordance with Table 1805.5(1), 1805.5(2), 1805.5(3) or 1805.5(4) shall comply with Section 1805.5.2.2.~~

~~**1805.5.2.1 Concrete foundation walls.** Concrete foundation walls shall comply with the following:~~

~~1. The size and spacing of vertical reinforcement shown in Table 1805.5(5) is based on the use of reinforcement with a minimum yield strength of 60,000 psi (414 MPa). Vertical reinforcement with a minimum yield strength of 40,000 psi (276 MPa) or 50,000 psi (345 MPa) is permitted, provided the same size bar is used and the spacing shown in the table is reduced by multiplying the spacing by 0.67 or 0.83, respectively.~~

~~2. Vertical reinforcement, when required, shall be placed nearest the inside face of the wall a distance, d, from the outside face (soil side) of the wall. The distance, d, is equal to the wall thickness, t, minus 1.25 inches (32 mm) plus one-half the bar diameter, db [d = t - (1.25 + db/2)]. The reinforcement shall be placed within a tolerance of ± 3/8 inch (9.5 mm) where d is less than or equal to 8 inches (203 mm) or ± 1/2 inch (2.7 mm) where d is greater that 8 inches (203 mm).~~

~~3. In lieu of the reinforcement shown in Table 1805.5(5), smaller reinforcing bar sizes with closer spacings that provide an equivalent cross-sectional area of reinforcement per unit length of wall are permitted.~~

~~4. Concrete cover for reinforcement measured from the inside face of the wall shall not be less than 3/4 inch (19.1 mm). Concrete cover for reinforcement measured from the outside face of the wall shall not be less than 1.5 inches (38 mm) for No. 5 bars and smaller and not less than 2 inches (51 mm) for larger bars.~~

~~5. Concrete shall have a specified compressive strength ,fc′, of not less than 2,500 psi (17.2 MPa) at 28 days.~~

~~6. The unfactored axial load per linear foot of wall shall not exceed 1.2 tfc′, where t is the specified wall thickness in inches.~~

~~**1805.5.2.2 Masonry foundation walls.** Masonry foundation walls shall comply with the following:~~

~~1. Vertical reinforcement shall have a minimum yield strength of 60,000 psi (414 MPa).~~

~~2. The specified location of the reinforcement shall equal or exceed the effective depth distance ,d, noted in Tables 1805.5(2), 1805.5(3) and 1805.5(4) and shall be measured from the face of the exterior (soil) side of the wall to the center of the vertical reinforcement. The reinforcement shall be placed within the tolerances specified in ACI 530.1/ASCE 6/TMS 402, Article 3.4 B7 of the specified location.~~

~~3. Grout shall comply with Section 2103.12.~~

~~4. Concrete masonry units shall comply with ASTM C 90.~~

~~5. Clay masonry units shall comply with ASTM C 652 for hollow brick, except compliance with ASTM C 62 or ASTM C 216 is permitted when solid masonry units are installed in accordance with Table 1805.5(1) for plain masonry.~~

~~6. Masonry units shall be installed with Type M or S mortar in accordance with Section 2103.8.~~

~~7. The unfactored axial load per linear foot of wall shall not exceed 1.2tf ′m where t is the specified well thickness in inches and f ′m is the specified compressive strength of masonry in pounds per square inch.~~

~~**1805.5.3 Alternative foundation wall reinforcement.** In lieu of the reinforcement provisions for masonry foundation walls in Table 1805.5(2), 1805.5(3) or 1805.5(4), alternative reinforcing bar sizes and spacings having an equivalent cross-sectional area of reinforcement per linear foot (mm) of wall are permitted to be used, provided the spacing of reinforcement does not exceed 72 inches (1829 mm) and reinforcing bar sizes do not exceed No. 11.~~

~~**1805.5.4 Hollow masonry walls.** At least 4 inches (102 mm) of solid masonry shall be provided at girder supports at the top of hollow masonry unit foundation walls.~~

~~**1805.5.5 Seismic requirements.** Tables 1805.5(1) through 1805.5(5) shall be subject to the following limitations in Sections 1805.5.5.1 and 1805.5.5.2 based on the seismic design category assigned to the structure as defined in Section 1613.~~

~~**1805.5.5.1 Seismic requirements for concrete foundation walls.** Concrete foundation walls designed using Table 1805.5(5) shall be subject to the following limitations:~~

~~1. Seismic Design Categories A and B. No additional seismic requirements, except provide not less than two No. 5 bars around window and door openings. Such bars shall extend at least 24 inches (610 mm) beyond the corners of the openings.~~

~~2. Seismic Design Categories C, D, E and F. Tables shall not be used except as allowed for plain concrete members in Section 1908.1.15.~~

~~**1805.5.5.2 Seismic requirements for masonry foundation walls.** Masonry foundation walls designed using Tables 1805.5(1) through 1805.5(4) shall be subject to the following limitations:~~

~~1. Seismic Design Categories A and B. No additional seismic requirements.~~

~~2. Seismic Design Category C. A design using Tables 1805.5(1) through 1805.5(4) is subject to the seismic requirements of Section 2106.4.~~

~~3. Seismic Design Category D. A design using Tables 1805.2(2) through 1805.5(4) is subject to the seismic requirements of Section 2106.5.~~

~~4. Seismic Design Categories E and F. A design using Tables 1805.2(2) through 1805.5(4) is subject to the seismic requirements of Section 2106.6.~~

1805*A*.5.6 Foundation wall drainage. Foundation walls shall be designed to support the weight of the full hydrostatic pressure of undrained backfill unless a drainage system is installed in accordance with Sections 1807*A*.4.2 and 1807*A*.4.3.

1805*A*.5.7 Pier and curtain wall foundations. *Not permitted by OSHPD and DSA-SS.* ~~Except in Seismic Design Categories D, E and F, pier and curtain wall foundations are permitted to be used to support light-frame construction not more than two stories in height, provided the following requirements are met:~~

~~1. All load-bearing walls shall be placed on continuous concrete footings bonded integrally with the exterior wall footings.~~

~~2. The minimum actual thickness of a load-bearing masonry wall shall not be less than 4 inches (102 mm) nominal or 3.625 inches (92 mm) actual thickness, and shall be bonded integrally with piers spaced 6 feet (1829 mm) on center (o.c.).~~

~~3. Piers shall be constructed in accordance with Chapter 21 and the following:~~

~~3.1. The unsupported height of the masonry piers shall not exceed 10 times their least dimension.~~

~~3.2. Where structural clay tile or hollow concrete masonry units are used for piers supporting beams and girders, the cellular spaces shall be filled solidly with concrete or Type M or S mortar.~~

~~**Exception:** Unfilled hollow piers are permitted where the unsupported height of the pier is not more than four times its least dimension.~~

~~3.3. Hollow piers shall be capped with 4 inches (102 mm) of solid masonry or concrete or the cavities of the top course shall be filled with concrete or grout.~~

~~4. The maximum height of a 4-inch (102 mm) load-bearing masonry foundation wall supporting wood frame walls and floors shall not be more than 4 feet (1219 mm) in height.~~

~~5. The unbalanced fill for 4-inch (102 mm) foundation walls shall not exceed 24 inches (610 mm) for solid masonry, nor 12 inches (305 mm) for hollow masonry.~~

1805*A*.6 Foundation plate or sill bolting. Wood foundation plates or sills shall be bolted or strapped to the foundation or foundation wall as provided in Chapter 23. *Cold formed steel stud foundation plates or sills shall be bolted or fastened to the foundation or foundation wall as provided in Section 2210A.4.*

1805*A*.7 Designs employing lateral bearing. Designs to resist both axial and lateral loads employing posts or poles as columns embedded in earth or embedded in concrete footings in the earth shall conform to the requirements of Sections 1805*A*.7.1 through 1805*A*.7.3.

1805*A*.7.1 Limitations. The design procedures outlined in this section are subject to the following limitations:

1. The frictional resistance for structural walls and slabs on silts and clays shall be limited to one-half of the normal force imposed on the soil by the weight of the footing or slab.

2. Posts embedded in earth shall not be used to provide lateral support for structural or nonstructural materials such as plaster, masonry or concrete unless bracing is provided that develops the limited deflection required.

Wood poles shall be treated in accordance with AWPA U1 for sawn timber posts (Commodity Specification A, Use Category 4B) and for round timber posts (Commodity Specification B, Use Category 4B).

1805*A*.7.2 Design criteria. The depth to resist lateral loads shall be determined by the design criteria established in Sections 1805*A*.7.2.1 through 1805*A*.7.2.3, or by other methods approved by the building official.

1805*A*.7.2.1 Nonconstrained. The following formula shall be used in determining the depth of embedment required to resist lateral loads where no constraint is provided at the ground surface, such as rigid floor or rigid ground surface pavement, and where no lateral constraint is provided above the ground surface, such as a structural diaphragm.

$d = 0.5A\{1 + [1 + (4.36h/A)]^{1/2}\}$ **(Equation 18*A*-1)**

where:

$A = 2.34P/S_1\, b$.

b = Diameter of round post or footing or diagonal dimension of square post or footing, feet (m).

d = Depth of embedment in earth in feet (m) but not over 12 feet (3658 mm) for purpose of computing lateral pressure.

h = Distance in feet (m) from ground surface to point of application of "P."

P = Applied lateral force in pounds (kN).

S_1 = Allowable lateral soil-bearing pressure as set forth in Section 1804*A*.3 based on a depth of one-third the depth of embedment in pounds per square foot (psf) (kPa).

1805A.7.2.2 Constrained. The following formula shall be used to determine the depth of embedment required to resist lateral loads where constraint is provided at the ground surface, such as a rigid floor or pavement.

$d^2 = 4.25(Ph/S_3\, b)$ **(Equation 18A-2)**

or alternatively

$d^2 = 4.25\ (M_g/S_3 b)$ **(Equation 18A-3)**

where:

M_g = Moment in the post at grade, in foot-pounds (kN-m).

S_3 = Allowable lateral soil-bearing pressure as set forth in Section 1804A.3 based on a depth equal to the depth of embedment in pounds per square foot (kPa).

1805A.7.2.3 Vertical load. The resistance to vertical loads shall be determined by the allowable soil-bearing pressure set forth in Table 1804A.2.

1805A.7.3 Backfill. The backfill in the annular space around columns not embedded in poured footings shall be by one of the following methods:

1. Backfill shall be of concrete with an ultimate strength of 2,000 psi (13.8 MPa) at 28 days. The hole shall not be less than 4 inches (102 mm) larger than the diameter of the column at its bottom or 4 inches (102 mm) larger than the diagonal dimension of a square or rectangular column.

2. Backfill shall be of clean sand. The sand shall be thoroughly compacted by tamping in layers not more than 8 inches (203 mm) in depth.

3. Backfill shall be of controlled low-strength material (CLSM).

1805A.8 Design for expansive soils. Footings or foundations for buildings and structures founded on expansive soils shall be designed in accordance with Section 1805A.8.1 or 1805A.8.2.

Footing or foundation design need not comply with Section 1805A.8.1 or 1805A.8.2 where the soil is removed in accordance with Section 1805A.8.3, nor where the building official approves stabilization of the soil in accordance with Section 1805A.8.4.

1805A.8.1 Foundations. Footings or foundations placed on or within the active zone of expansive soils shall be designed to resist differential volume changes and to prevent structural damage to the supported structure. Deflection and racking of the supported structure shall be limited to that which will not interfere with the usability and serviceability of the structure.

Foundations placed below where volume change occurs or below expansive soil shall comply with the following provisions:

1. Foundations extending into or penetrating expansive soils shall be designed to prevent uplift of the supported structure.

2. Foundations penetrating expansive soils shall be designed to resist forces exerted on the foundation due to soil volume changes or shall be isolated from the expansive soil.

1805A.8.2 Slab-on-ground foundations. Moments, shears and deflections for use in designing slab-on-ground, mat or raft foundations on expansive soils shall be determined in accordance with *WRI/CRSI Design of Slab-on-Ground Foundations* or *PTI Standard Requirements for Analysis of Shallow Concrete Foundations on Expansive Soils.* Using the moments, shears and deflections determined above, nonprestressed slabs-on-ground, mat or raft foundations on expansive soils shall be designed in accordance with *WRI/CRSI Design of Slab-on-Ground Foundations* and post-tensioned slab-on-ground, mat or raft foundations on expansive soils shall be designed in accordance with *PTI Standard Requirements for Design of Shallow Post-Tensioned Concrete Foundations on Expansive Soils*. It shall be permitted to analyze and design such slabs by other methods that account for soil-

structure interaction, the deformed shape of the soil support, the plate or stiffened plate action of the slab as well as both center lift and edge lift conditions. Such alternative methods shall be rational and the basis for all aspects and parameters of the method shall be available for peer review.

1805*A*.8.3 Removal of expansive soil. Where expansive soil is removed in lieu of designing footings or foundations in accordance with Section 1805*A*.8.1 or 1805*A*.8.2, the soil shall be removed to a depth sufficient to ensure a constant moisture content in the remaining soil. Fill material shall not contain expansive soils and shall comply with Section 1803*A*.5 or 1803*A*.6.

Exception: Expansive soil need not be removed to the depth of constant moisture, provided the confining pressure in the expansive soil created by the fill and supported structure exceeds the swell pressure.

1805*A*.8.4 Stabilization. Where the active zone of expansive soils is stabilized in lieu of designing footings or foundations in accordance with Section 1805*A*.8.1 or 1805*A*.8.2, the soil shall be stabilized by chemical, dewatering, presaturation or equivalent techniques.

1805*A*.9 Seismic requirements. See Section 1908*A* for additional requirements for footings and foundations of structures assigned to Seismic Design Category ~~C,~~ D, E or F.

For structures assigned to Seismic Design Category D, E or F, provisions of ACI 318, Sections 21.10.1 to 21.10.3, shall apply when not in conflict with the provisions of Section 1805*A*. Concrete shall have a specified compressive strength of not less than 3,000 psi (20.68 MPa) at 28 days.

Exceptions:

1. Group R or U occupancies of light-framed construction and two stories or less in height are permitted to use concrete with a specified compressive strength of not less than 2,500 psi (17.2 MPa) at 28 days.

2. Detached one- and two-family dwellings of light-frame construction and two stories or less in height are not required to comply with the provisions of ACI 318, Sections 21.10.1 to 21.10.3.

SECTION 1806*A* - RETAINING WALLS *AND CANTILEVER WALLS*

1806*A*.1 General. Retaining walls shall be designed to ensure stability against overturning, sliding, excessive foundation pressure and water uplift. Retaining walls shall be designed for a safety factor of 1.5 against lateral sliding and overturning.

(Relocated from 1611A.6, CBC 2001) Retaining walls higher than 12 feet (3658 mm), as measured from the top of the foundation, shall be designed to resist the additional earth pressure caused by seismic ground shaking.

The resultant of the vertical loads and lateral pressures using load combination of section 1605A.3 acting on the wall and its base shall pass through the middle half of the bottom of the footing.

Retaining walls shall be restrained against sliding by friction of the base against the earth, by passive resistance of the soil or by a combination of the two. When used, keys may be assumed to lower the plane of frictional resistance and depth of passive resistance to the level of the bottom of the key. Passive resistance pressures shall be assumed to act on a vertical plane located at the toe of the footing. Overturning shall be computed about the bottom of the spread footing. Passive resistance on the face of the wall may be included in computing resistance to overturning. Frictional resistance on the face of the wall may be included in computing resistance to overturning, except when lateral loads include seismic forces. ~~See Section 1611A.13 for overturning provisions for free standing walls.~~

Gravity-type retaining walls utilizing precast concrete units may be used as an alternative to the conventional cantilever retaining systems only after they have been accepted by the enforcement agency.

1806A.2 *(Relocated from 1611A.13, CBC 2001)* ***Freestanding Cantilever Walls.*** *A stability check against the possibility of overturning shall be performed for isolated spread footings which support freestanding*

cantilever walls. The stability check shall be made by ~~multiplying the lateral forces by two~~ dividing R_p used for the wall by 2.0. The allowable soil pressure may be doubled for this evaluation.

EXCEPTION: *For overturning about the principal axis of rectangular footings with symmetrical vertical loading and the design lateral force applied, a triangular or trapezoidal soil pressure distribution which covers the full width of the footing will meet the stability requirement.*

SECTION 1807*A* - DAMPPROOFING AND WATERPROOFING

1807*A*.1 Where required. Walls or portions thereof that retain earth and enclose interior spaces and floors below grade shall be waterproofed and dampproofed in accordance with this section, with the exception of those spaces containing groups other than residential and institutional where such omission is not detrimental to the building or occupancy.

Ventilation for crawl spaces shall comply with Section 1203.4.

1807*A*.1.1 Story above grade. Where a basement is considered a story above grade and the finished ground level adjacent to the basement wall is below the basement floor elevation for 25 percent or more of the perimeter, the floor and walls shall be dampproofed in accordance with Section 1807*A*.2 and a foundation drain shall be installed in accordance with Section 1807*A*.4.2. The foundation drain shall be installed around the portion of the perimeter where the basement floor is below ground level. The provisions of Sections 1802*A*.2.3, 1807*A*.3 and 1807*A*.4.1 shall not apply in this case.

1807*A*.1.2 Under-floor space. The finished ground level of an under-floor space such as a crawl space shall not be located below the bottom of the footings. Where there is evidence that the ground-water table rises to within 6 inches (152 mm) of the ground level at the outside building perimeter, or that the surface water does not readily drain from the building site, the ground level of the under-floor space shall be as high as the outside finished ground level, unless an approved drainage system is provided. The provisions of Sections 1802*A*.2.3, 1807*A*.2, 1807*A*.3 and 1807*A*.4 shall not apply in this case.

1807*A*.1.2.1 Flood hazard areas. For buildings and structures in flood hazard areas as established in Section 1612*A*.3, the finished ground level of an under-floor space such as a crawl space shall be equal to or higher than the outside finished ground level.

Exception: Under-floor spaces of Group R-3 buildings that meet the requirements of FEMA/ FIA-TB-11.

1807*A*.1.3 Ground-water control. Where the ground-water table is lowered and maintained at an elevation not less than 6 inches (152 mm) below the bottom of the lowest floor, the floor and walls shall be dampproofed in accordance with Section 1807*A*.2. The design of the system to lower the ground-water table shall be based on accepted principles of engineering that shall consider, but not necessarily be limited to, permeability of the soil, rate at which water enters the drainage system, rated capacity of pumps, head against which pumps are to operate and the rated capacity of the disposal area of the system.

1807*A*.2 Dampproofing required. Where hydrostatic pressure will not occur as determined by Section 1802*A*.2.3, floors and walls ~~for other than wood foundation systems~~ shall be dampproofed in accordance with this section. ~~Wood foundation systems shall be constructed in accordance with AF&PA Technical Report No. 7.~~

1807*A*.2.1 Floors. Dampproofing materials for floors shall be installed between the floor and the base course required by Section 1807*A*.4.1, except where a separate floor is provided above a concrete slab.

Where installed beneath the slab, dampproofing shall consist of not less than 6-mil (0.006 inch; 0.152 mm) polyethylene with joints lapped not less than 6 inches (152 mm), or other approved methods or materials. Where permitted to be installed on top of the slab, dampproofing shall consist of mopped-on bitumen, not less than 4-mil (0.004 inch; 0.102 mm) polyethylene, or other approved methods or materials. Joints in the membrane shall be lapped and sealed in accordance with the manufacturer's installation instructions.

1807*A*.2.2 Walls. Dampproofing materials for walls shall be installed on the exterior surface of the wall, and shall extend from the top of the footing to above ground level.

Dampproofing shall consist of a bituminous material, 3 pounds per square yard (16 N/m^2) of acrylic modified cement, 0.125 inch (3.2 mm) coat of surface-bonding mortar complying with ASTM C 887, any of the materials permitted for waterproofing by Section 1807A.3.2 or other approved methods or materials.

1807A.2.2.1 Surface preparation of walls. Prior to application of dampproofing materials on concrete walls, holes and recesses resulting from the removal of form ties shall be sealed with a bituminous material or other approved methods or materials. Unit masonry walls shall be parged on the exterior surface below ground level with not less than 0.375 inch (9.5 mm) of portland cement mortar. The parging shall be coved at the footing.

Exception: Parging of unit masonry walls is not required where a material is approved for direct application to the masonry.

1807A.3 Waterproofing required. Where the ground-water investigation required by Section 1802A.2.3 indicates that a hydrostatic pressure condition exists, and the design does not include a ground-water control system as described in Section 1807A.1.3, walls and floors shall be waterproofed in accordance with this section.

1807A.3.1 Floors. Floors required to be waterproofed shall be of concrete and designed and constructed to withstand the hydrostatic pressures to which the floors will be subjected.

Waterproofing shall be accomplished by placing a membrane of rubberized asphalt, butyl rubber, fully adhered / fully bonded HDPE or polyolefin composite membrane or not less than 6-mil [0.006 inch (0.152 mm)] polyvinyl chloride with joints lapped not less than 6 inches (152 mm) or other approved materials under the slab. Joints in the membrane shall be lapped and sealed in accordance with the manufacturer's installation instructions.

1807A.3.2 Walls. Walls required to be waterproofed shall be of concrete or masonry and shall be designed and constructed to withstand the hydrostatic pressures and other lateral loads to which the walls will be subjected.

Waterproofing shall be applied from the bottom of the wall to not less than 12 inches (305 mm) above the maximum elevation of the ground-water table. The remainder of the wall shall be dampproofed in accordance with Section 1807A.2.2. Waterproofing shall consist of two-ply hot-mopped felts, not less than 6-mil (0.006 inch; 0.152 mm) polyvinyl chloride, 40-mil (0.040 inch; 1.02 mm) polymer-modified asphalt, 6-mil (0.006 inch; 0.152 mm) polyethylene or other approved methods or materials capable of bridging nonstructural cracks. Joints in the membrane shall be lapped and sealed in accordance with the manufacturer's installation instructions.

1807A.3.2.1 Surface preparation of walls. Prior to the application of waterproofing materials on concrete or masonry walls, the walls shall be prepared in accordance with Section 1807A.2.2.1.

1807A.3.3 Joints and penetrations. Joints in walls and floors, joints between the wall and floor and penetrations of the wall and floor shall be made water-tight utilizing approved methods and materials.

1807A.4 Subsoil drainage system. Where a hydrostatic pressure condition does not exist, dampproofing shall be provided and a base shall be installed under the floor and a drain installed around the foundation perimeter. A subsoil drainage system designed and constructed in accordance with Section 1807A.1.3 shall be deemed adequate for lowering the ground-water table.

1807A.4.1 Floor base course. Floors of basements, except as provided for in Section 1807A.1.1, shall be placed over a floor base course not less than 4 inches (102 mm) in thickness that consists of gravel or crushed stone containing not more than 10 percent of material that passes through a No. 4 (4.75 mm) sieve.

Exception: Where a site is located in well-drained gravel or sand/gravel mixture soils, a floor base course is not required.

1807A.4.2 Foundation drain. A drain shall be placed around the perimeter of a foundation that consists of gravel or crushed stone containing not more than 10-percent material that passes through a No. 4 (4.75 mm) sieve. The drain shall extend a minimum of 12 inches (305 mm) beyond the outside edge of the footing. The thickness shall be such that the bottom of the drain is not higher than the bottom of the base under the floor, and that the top of the drain is not less than 6 inches (152 mm) above the top of the footing. The top of the drain shall be covered with an approved filter membrane material. Where a drain tile or perforated pipe is used, the invert of the pipe or tile shall not be higher than the floor elevation. The top of joints or the top of perforations shall be protected with an approved filter membrane material. The pipe or tile shall be placed on not less than 2 inches (51 mm) of gravel or

crushed stone complying with Section 1807*A*.4.1, and shall be covered with not less than 6 inches (152 mm) of the same material.

1807*A*.4.3 Drainage discharge. The floor base and foundation perimeter drain shall discharge by gravity or mechanical means into an approved drainage system that complies with the ~~*International*~~ California *Plumbing Code*.

Exception: Where a site is located in well-drained gravel or sand / gravel mixture soils, a dedicated drainage system is not required.

SECTION 1808*A* - PIER AND PILE FOUNDATIONS

1808*A*.1 Definitions. The following words and terms shall, for the purposes of this section, have the meanings shown herein.

FLEXURAL LENGTH. Flexural length is the length of the pile from the first point of zero lateral deflection to the underside of the pile cap or grade beam.

MICROPILES. Micropiles are 12-inch-diameter (305 mm) or less bored, grouted-in-place piles incorporating steel pipe (casing) and/or steel reinforcement.

PIER FOUNDATIONS. Pier foundations consist of isolated masonry or cast-in-place concrete structural elements extending into firm materials. Piers are relatively short in comparison to their width, with lengths less than or equal to 12 times the least horizontal dimension of the pier. Piers derive their load-carrying capacity through skin friction, through end bearing, or a combination of both.

Belled piers. Belled piers are cast-in-place concrete piers constructed with a base that is larger than the diameter of the remainder of the pier. The belled base is designed to increase the load-bearing area of the pier in end bearing.

PILE FOUNDATIONS. Pile foundations consist of concrete, wood or steel structural elements either driven into the ground or cast in place. Piles are relatively slender in comparison to their length, with lengths exceeding 12 times the least horizontal dimension. Piles derive their load-carrying capacity through skin friction, end bearing or a combination of both.

Augered uncased piles. Augered uncased piles are constructed by depositing concrete into an uncased augered hole, either during or after the withdrawal of the auger.

Caisson piles. Caisson piles are cast-in-place concrete piles extending into bedrock. The upper portion of a caisson pile consists of a cased pile that extends to the bedrock. The lower portion of the caisson pile consists of an uncased socket drilled into the bedrock.

Concrete-filled steel pipe and tube piles. Concrete-filled steel pipe and tube piles are constructed by driving a steel pipe or tube section into the soil and filling the pipe or tube section with concrete. The steel pipe or tube section is left in place during and after the deposition of the concrete.

Driven uncased piles. Driven uncased piles are constructed by driving a steel shell into the soil to shore an unexcavated hole that is later filled with concrete. The steel casing is lifted out of the hole during the deposition of the concrete.

Enlarged base piles. Enlarged base piles are cast-in-place concrete piles constructed with a base that is larger than the diameter of the remainder of the pile. The enlarged base is designed to increase the load-bearing area of the pile in end bearing.

Steel-cased piles. Steel-cased piles are constructed by driving a steel shell into the soil to shore an unexcavated hole. The steel casing is left permanently in place and filled with concrete.

Timber piles. Timber piles are round, tapered timbers with the small (tip) end embedded into the soil.

1808*A*.2 Piers and piles—general requirements.

1808*A*.2.1 Design. Piles are permitted to be designed in accordance with provisions for piers in Section 1808*A* and Sections 1812*A*.3 through 1812*A*.10 where either of the following conditions exists, subject to the approval of the building official:

1. Group R-3 and U occupancies not exceeding two stories of light-frame construction, or

2. Where the surrounding foundation materials furnish adequate lateral support for the pile.

1808*A*.2.2 General. Pier and pile foundations shall be designed and installed on the basis of a foundation investigation as defined in Section 1802*A*, unless sufficient data upon which to base the design and installation is available.

The investigation and report provisions of Section 1802*A* shall be expanded to include, but not be limited to, the following:

1. Recommended pier or pile types and installed capacities.

2. Recommended center-to-center spacing of piers or piles.

3. Driving criteria.

4. Installation procedures.

5. Field inspection and reporting procedures (to include procedures for verification of the installed bearing capacity where required).

6. Pier or pile load test requirements.

7. Durability of pier or pile materials.

8. Designation of bearing stratum or strata.

9. Reductions for group action, where necessary.

1808*A*.2.3 Special types of piles. The use of types of piles not specifically mentioned herein is permitted, subject to the approval of the building official, upon the submission of acceptable test data, calculations and other information relating to the structural properties and load capacity of such piles. The allowable stresses shall not in any case exceed the limitations specified herein.

1808*A*.2.4 Pile caps. Pile caps shall be of reinforced concrete, and shall include all elements to which piles are connected, including grade beams and mats. The soil immediately below the pile cap shall not be considered as carrying any vertical load. The tops of piles shall be embedded not less than 3 inches (76 mm) into pile caps and the caps shall extend at least 4 inches (102 mm) beyond the edges of piles. The tops of piles shall be cut back to sound material before capping.

1808*A*.2.5 Stability. Piers or piles shall be braced to provide lateral stability in all directions. Three or more piles connected by a rigid cap shall be considered braced, provided that the piles are located in radial directions from the centroid of the group not less than 60 degrees (1 rad) apart. A two-pile group in a rigid cap shall be considered to be braced along the axis connecting the two piles. Methods used to brace piers or piles shall be subject to the approval of the building official.

Piles supporting walls shall be driven alternately in lines spaced at least 1 foot (305 mm) apart and located symmetrically under the center of gravity of the wall load carried, unless effective measures are taken to provide for eccentricity and lateral forces, or the wall piles are adequately braced to provide for lateral stability. A single row of piles without lateral bracing is permitted for one- and two-family dwellings and lightweight construction not exceeding two stories or 35 feet (10 668 mm) in height, provided the centers of the piles are located within the width of the foundation wall.

1808*A*.2.6 Structural integrity. Piers or piles shall be installed in such a manner and sequence as to prevent distortion or damage that may adversely affect the structural integrity of piles being installed or already in place.

1808*A*.2.7 Splices. Splices shall be constructed so as to provide and maintain true alignment and position of the component parts of the pier or pile during installation and subsequent thereto and shall be of adequate strength to transmit the vertical and lateral loads and moments occurring at the location of the splice during driving and under service loading. Splices shall develop not less than 50 percent of the least capacity of the pier or pile in bending. In addition, splices occurring in the upper 10 feet (3048 mm) of the embedded portion of the pier or pile shall be capable of resisting at allowable working stresses the moment and shear that would result from an assumed eccentricity of the pier or pile load of 3 inches (76 mm), or the pier or pile shall be braced in accordance with Section 1808*A*.2.5 to other piers or piles that do not have splices in the upper 10 feet (3048 mm) of embedment.

1808*A*.2.8 Allowable pier or pile loads.

1808*A*.2.8.1 Determination of allowable loads. The allowable axial and lateral loads on piers or piles shall be determined by an approved formula, load tests or method of analysis.

1808*A*.2.8.2 Driving criteria. The allowable compressive load on any pile where determined by the application of an approved driving formula shall not exceed 40 tons (356 kN). For allowable loads above 40 tons (356 kN), the wave equation method of analysis shall be used to estimate pile driveability of both driving stresses and net displacement per blow at the ultimate load. Allowable loads shall be verified by load tests in accordance with Section 1808*A*.2.8.3. The formula or wave equation load shall be determined for gravity-drop or power-actuated hammers and the hammer energy used shall be the maximum consistent with the size, strength and weight of the driven piles. The use of a follower is permitted only with the approval of the building official. The introduction of fresh hammer cushion or pile cushion material just prior to final penetration is not permitted.

1808*A*.2.8.3 Load tests. Where design compressive loads per pier or pile are greater than those permitted by Section 1808*A*.2.10 or where the design load for any pier or pile foundation is in doubt, control test piers or piles shall be tested in accordance with ASTM D 1143 or ASTM D 4945. At least one pier or pile shall be test loaded in each area of uniform subsoil conditions. Where required by the building official, additional piers or piles shall be load tested where necessary to establish the safe design capacity. The resulting allowable loads shall not be more than one-half of the ultimate axial load capacity of the test pier or pile as assessed by one of the published methods listed in Section 1808*A*.2.8.3.1 with consideration for the test type, duration and subsoil. The ultimate axial load capacity shall be determined by a registered design professional with consideration given to tolerable total and differential settlements at design load in accordance with Section 1808*A*.2.12. In subsequent installation of the balance of foundation piles, all piles shall be deemed to have a supporting capacity equal to the control pile where such piles are of the same type, size and relative length as the test pile; are installed using the same or comparable methods and equipment as the test pile; are installed in similar subsoil conditions as the test pile; and, for driven piles, where the rate of penetration (e.g., net displacement per blow) of such piles is equal to or less than that of the test pile driven with the same hammer through a comparable driving distance.

1808*A*.2.8.3.1 Load test evaluation. It shall be permitted to evaluate pile load tests with any of the following methods:

1. Davisson Offset Limit.

2. Brinch-Hansen 90% Criterion.

3. Butler-Hoy Criterion.

4. Other methods approved by the building official.

1808*A*.2.8.4 Allowable frictional resistance. The assumed frictional resistance developed by any pier or uncased cast-in-place pile shall not exceed one-sixth of the bearing value of the soil material at minimum depth as set forth in Table 1804*A*.2, up to a maximum of 500 psf (24 kPa), unless a greater value is allowed by the building official after a soil investigation, as specified in Section 1802*A*, is submitted or a greater value is substantiated by a load test in accordance with Section 1808*A*.2.8.3. Frictional resistance and bearing resistance shall not be assumed to act simultaneously unless recommended by a soil investigation as specified in Section 1802*A*.

1808*A*.2.8.5 Uplift capacity. Where required by the design, the uplift capacity of a single pier or pile shall be determined by an approved method of analysis based on a minimum factor of safety of three or by load tests

conducted in accordance with ASTM D 3689. The maximum allowable uplift load shall not exceed the ultimate load capacity as determined in Section 1808*A*.2.8.3 divided by a factor of safety of two. For pile groups subjected to uplift, the allowable working uplift load for the group shall be the lesser of:

1. The proposed individual pile uplift working load times the number of piles in the group.

2. Two-thirds of the effective weight of the pile group and the soil contained within a block defined by the perimeter of the group and the length of the pile.

1808*A*.2.8.6 Load-bearing capacity. Piers, individual piles and groups of piles shall develop ultimate load capacities of at least twice the design working loads in the designated load-bearing layers. Analysis shall show that no soil layer underlying the designated load-bearing layers causes the load-bearing capacity safety factor to be less than two.

1808*A*.2.8.7 Bent piers or piles. The load-bearing capacity of piers or piles discovered to have a sharp or sweeping bend shall be determined by an approved method of analysis or by load testing a representative pier or pile.

1808*A*.2.8.8 Overloads on piers or piles. The maximum compressive load on any pier or pile due to mislocation shall not exceed 110 percent of the allowable design load.

1808*A*.2.9 Lateral support.

1808*A*.2.9.1 General. Any soil other than fluid soil shall be deemed to afford sufficient lateral support to the pier or pile to prevent buckling and to permit the design of the pier or pile in accordance with accepted engineering practice and the applicable provisions of this code.

1808*A*.2.9.2 Unbraced piles. Piles standing unbraced in air, water or in fluid soils shall be designed as columns in accordance with the provisions of this code. Such piles driven into firm ground can be considered fixed and laterally supported at 5 feet (1524 mm) below the ground surface and in soft material at 10 feet (3048 mm) below the ground surface unless otherwise prescribed by the building official after a foundation investigation by an approved agency.

1808*A*.2.9.3 Allowable lateral load. Where required by the design, the lateral load capacity of a pier, a single pile or a pile group shall be determined by an approved method of analysis or by lateral load tests to at least twice the proposed design working load. The resulting allowable load shall not be more than one-half of that test load that produces a gross lateral movement of 1 inch (25 mm) at the ground surface.

1808*A*.2.10 Use of higher allowable pier or pile stresses. Allowable stresses greater than those specified for piers or for each pile type in Sections 1809*A* and 1810*A* are permitted where supporting data justifying such higher stresses is filed with the building official. Such substantiating data shall include:

1. A soils investigation in accordance with Section 1802*A*.

2. Pier or pile load tests in accordance with Section 1808*A*.2.8.3, regardless of the load supported by the pier or pile.

The design and installation of the pier or pile foundation shall be under the direct supervision of a registered design professional knowledgeable in the field of soil mechanics and pier or pile foundations who shall certify to the building official that the piers or piles as installed satisfy the design criteria.

1808*A*.2.11 Piles in subsiding areas. Where piles are installed through subsiding fills or other subsiding strata and derive support from underlying firmer materials, consideration shall be given to the downward frictional forces that may be imposed on the piles by the subsiding upper strata.

Where the influence of subsiding fills is considered as imposing loads on the pile, the allowable stresses specified in this chapter are permitted to be increased where satisfactory substantiating data are submitted.

1808*A*.2.12 Settlement analysis. The settlement of piers, individual piles or groups of piles shall be estimated based on approved methods of analysis. The predicted settlement shall cause neither harmful distortion of, nor instability in, the structure, nor cause any stresses to exceed allowable values.

1808*A*.2.13 Preexcavation. The use of jetting, augering or other methods of preexcavation shall be subject to the approval of the building official. Where permitted, preexcavation shall be carried out in the same manner as used for piers or piles subject to load tests and in such a manner that will not impair the carrying capacity of the piers or piles already in place or damage adjacent structures. Pile tips shall be driven below the preexcavated depth until the required resistance or penetration is obtained.

1808*A*.2.14 Installation sequence. Piles shall be installed in such sequence as to avoid compacting the surrounding soil to the extent that other piles cannot be installed properly, and to prevent ground movements that are capable of damaging adjacent structures.

1808*A*.2.15 Use of vibratory drivers. Vibratory drivers shall only be used to install piles where the pile load capacity is verified by load tests in accordance with Section 1808*A*.2.8.3. The installation of production piles shall be controlled according to power consumption, rate of penetration or other approved means that ensure pile capacities equal or exceed those of the test piles.

1808*A*.2.16 Pile driveability. Pile cross sections shall be of sufficient size and strength to withstand driving stresses without damage to the pile, and to provide sufficient stiffness to transmit the required driving forces.

1808*A*.2.17 Protection of pile materials. Where boring records or site conditions indicate possible deleterious action on pier or pile materials because of soil constituents, changing water levels or other factors, the pier or pile materials shall be adequately protected by materials, methods or processes approved by the building official. Protective materials shall be applied to the piles so as not to be rendered ineffective by driving. The effectiveness of such protective measures for the particular purpose shall have been thoroughly established by satisfactory service records or other evidence.

1808*A*.2.18 Use of existing piers or piles. Piers or piles left in place where a structure has been demolished shall not be used for the support of new construction unless satisfactory evidence is submitted to the building official, which indicates that the piers or piles are sound and meet the requirements of this code. Such piers or piles shall be load tested or redriven to verify their capacities. The design load applied to such piers or piles shall be the lowest allowable load as determined by tests or redriving data.

1808*A*.2.19 Heaved piles. Piles that have heaved during the driving of adjacent piles shall be redriven as necessary to develop the required capacity and penetration, or the capacity of the pile shall be verified by load tests in accordance with Section 1808*A*.2.8.3.

1808*A*.2.20 Identification. Pier or pile materials shall be identified for conformity to the specified grade with this identity maintained continuously from the point of manufacture to the point of installation or shall be tested by an approved agency to determine conformity to the specified grade. The approved agency shall furnish an affidavit of compliance to the building official.

1808*A*.2.21 Pier or pile location plan. A plan showing the location and designation of piers or piles by an identification system shall be filed with the building official prior to installation of such piers or piles. Detailed records for piers or individual piles shall bear an identification corresponding to that shown on the plan.

1808A.2.22 Special inspection. Special inspections in accordance with Sections 1704*A*.8 and 1704*A*.9 shall be provided for piles and piers, respectively.

1808*A*.2.23 Seismic design of piers or piles.

1808*A*.2.23.1 Seismic Design Category C. Where a structure is assigned to Seismic Design Category C ~~in accordance with Section 1613~~, the following shall apply. Individual pile caps, piers or piles shall be interconnected by ties. Ties shall be capable of carrying, in tension and compression, a force equal to the product of the larger pile cap or column load times the seismic coefficient, S_{DS}, divided by 10 unless it can be demonstrated that equivalent restraint is provided by reinforced concrete beams within slabs on grade, reinforced concrete slabs on grade, confinement by competent rock, hard cohesive soils or very dense granular soils.

Exception: Piers supporting foundation walls, isolated interior posts detailed so the pier is not subject to lateral loads, lightly loaded exterior decks and patios of Group R-3 and U occupancies not exceeding two stories of light-frame construction, are not subject to interconnection if it can be shown the soils are of adequate stiffness, subject to the approval of the building official.

1808*A*.2.23.1.1 Connection to pile cap. Concrete piles and concrete-filled steel pipe piles shall be connected to the pile cap by embedding the pile reinforcement or field-placed dowels anchored in the concrete pile in the pile cap for a distance equal to the development length. For deformed bars, the development length is the full development length for compression or tension, in the case of uplift, without reduction in length for excess area. Alternative measures for laterally confining concrete and maintaining toughness and ductile-like behavior at the top of the pile will be permitted provided the design is such that any hinging occurs in the confined region.

Ends of hoops, spirals and ties shall be terminated with seismic hooks, as defined in Section 21.1 of ACI 318, turned into the confined concrete core. The minimum transverse steel ratio for confinement shall not be less than one-half of that required for columns.

For resistance to uplift forces, anchorage of steel pipe (round HSS sections), concrete-filled steel pipe or H-piles to the pile cap shall be made by means other than concrete bond to the bare steel section.

Exception: Anchorage of concrete-filled steel pipe piles is permitted to be accomplished using deformed bars developed into the concrete portion of the pile.

Splices of pile segments shall develop the full strength of the pile, but the splice need not develop the nominal strength of the pile in tension, shear and bending when it has been designed to resist axial and shear forces and moments from the load combinations of Section 1605*A*.4.

1808*A*.2.23.1.2 Design details. Pier or pile moments, shears and lateral deflections used for design shall be established considering the nonlinear interaction of the shaft and soil, as recommended by a registered design professional. Where the ratio of the depth of embedment of the pile-to-pile diameter or width is less than or equal to six, the pile may be assumed to be rigid.

Pile group effects from soil on lateral pile nominal strength shall be included where pile center-to-center spacing in the direction of lateral force is less than eight pile diameters. Pile group effects on vertical nominal strength shall be included where pile center-to-center spacing is less than three pile diameters. The pile uplift soil nominal strength shall be taken as the pile uplift strength as limited by the frictional force developed between the soil and the pile.

Where a minimum length for reinforcement or the extent of closely spaced confinement reinforcement is specified at the top of the pier or pile, provisions shall be made so that those specified lengths or extents are maintained after pier or pile cutoff.

1808*A*.2.23.2 Seismic Design Category D, E or F. Where a structure is assigned to Seismic Design Category D, E or F in accordance with Section 1613*A*, the requirements for Seismic Design Category C given in Section 1808*A*.2.23.1 shall be met, in addition to the following. Provisions of ACI 318, Section 21.10.4, shall apply when not in conflict with the provisions of Sections 1808*A* through 1812*A*. Concrete shall have a specified compressive strength of not less than 3,000 psi (20.68 MPa) at 28 days.

Exceptions:

1. Group R or U occupancies of light-framed construction and two stories or less in height are permitted to use concrete with a specified compressive strength of not less than 2,500 psi (17.2 MPa) at 28 days.

2. *Not permitted by OSHPD and DSA-SS.* ~~Detached one- and two-family dwellings of light-frame construction and two stories or less in height are not required to comply with the provisions of ACI 318, Section 21.10.4.~~

3. *Not permitted by OSHPD and DSA-SS.* ~~Section 21.10.4.4(a) of ACI 318 need not apply to concrete piles.~~

1808*A*.2.23.2.1 Design details for piers, piles and grade beams. Piers or piles shall be designed and constructed to withstand maximum imposed curvatures from earthquake ground motions and structure response. Curvatures shall include free-field soil strains modified for soil-pile-structure interaction coupled with pier or pile deformations induced by lateral pier or pile resistance to structure seismic

forces. Concrete piers or piles on Site Class E or F sites, as determined in Section 1613*A*.5.2, shall be designed and detailed in accordance with Sections 21.4.4.1, 21.4.4.2 and 21.4.4.3 of ACI 318 within seven pile diameters of the pile cap and the interfaces of soft to medium stiff clay or liquefiable strata. For precast prestressed concrete piles, detailing provisions as given in Sections 1809*A*.2.3.2.1 and 1809*A*.2.3.2.2 shall apply. Grade beams shall be designed as beams in accordance with ACI 318, Chapter 21. When grade beams have the capacity to resist the forces from the load combinations in Section 1605*A*.4, they need not conform to ACI 318, Chapter 21.

1808*A*.2.23.2.2 Connection to pile cap. For piles required to resist uplift forces or provide rotational restraint, design of anchorage of piles into the pile cap shall be provided considering the combined effect of axial forces due to uplift and bending moments due to fixity to the pile cap. Anchorage shall develop a minimum of 25 percent of the strength of the pile in tension. Anchorage into the pile cap shall be capable of developing the following:

1. In the case of uplift, the lesser of the nominal tensile strength of the longitudinal reinforcement in a concrete pile, or the nominal tensile strength of a steel pile, or the pile uplift soil nominal strength factored by 1.3 or the axial tension force resulting from the load combinations of Section 1605*A*.4.

2. In the case of rotational restraint, the lesser of the axial and shear forces, and moments resulting from the load combinations of Section 1605*A*.4 or development of the full axial, bending and shear nominal strength of the pile.

1808*A*.2.23.2.3 Flexural strength. Where the vertical lateral-force-resisting elements are columns, the grade beam or pile cap flexural strengths shall exceed the column flexural strength.

The connection between batter piles and grade beams or pile caps shall be designed to resist the nominal strength of the pile acting as a short column. Batter piles and their connection shall be capable of resisting forces and moments from the load combinations of Section 1605*A*.4.

1808A.2.23.2.4 Deformation *(Relocated from 1806A.8.1, CBC 2001) Piles and ~~caissons~~ piers used to support lateral loads from structures shall be designed with due consideration to the ~~elastic~~ deformation of the piles, ~~caissons~~ piers, pile caps and connecting grade beams.*

SECTION 1809*A* DRIVEN PILE FOUNDATIONS

1809*A*.1 Timber piles. *Not permitted by OSHPD and DSA-SS.* ~~Timber piles shall be designed in accordance with the AF&PA NDS.~~

~~1809.1.1 Materials. Round timber piles shall conform to ASTM D 25. Sawn timber piles shall conform to DOC PS 20.~~

~~**1809.1.2 Preservative treatment.** Timber piles used to support permanent structures shall be treated in accordance with this section unless it is established that the tops of the untreated timber piles will be below the lowest ground-water level assumed to exist during the life of the structure. Preservative and minimum final retention shall be in accordance with AWPA U1 (Commodity Specification E, Use Category 4C) for round timber piles and AWPA U1 (Commodity Specification A, Use Category 4B) for sawn timber piles. Preservative-treated timber piles shall be subject to a quality control program administered by an approved agency. Pile cutoffs shall be treated in accordance with AWPA M4.~~

~~1809.1.3 Defective piles. Any substantial sudden increase in rate of penetration of a timber pile shall be investigated for possible damage. If the sudden increase in rate of penetration cannot be correlated to soil strata, the pile shall be removed for inspection or rejected.~~

~~**1809.1.4 Allowable stresses.** The allowable stresses shall be in accordance with the AF&PA NDS.~~

1809*A*.2 Precast concrete piles.

1809*A*.2.1 General. The materials, reinforcement and installation of precast concrete piles shall conform to Sections 1809*A*.2.1.1 through 1809*A*.2.1.4.

1809*A*.2.1.1 Design and manufacture. Piles shall be designed and manufactured in accordance with accepted engineering practice to resist all stresses induced by handling, driving and service loads.

1809*A*.2.1.2 Minimum dimension. The minimum lateral dimension shall be 8 inches (203 mm). Corners of square piles shall be chamfered.

1809*A*.2.1.3 Reinforcement. Longitudinal steel shall be arranged in a symmetrical pattern and be laterally tied with steel ties or wire spiral spaced not more than 4 inches (102 mm) apart, center to center, for a distance of 2 feet (610 mm) from the ends of the pile; and not more than 6 inches (152 mm) elsewhere except that at the ends of each pile, the first five ties or spirals shall be spaced 1 inch (25 mm) center to center. The gage of ties and spirals shall be as follows:

For piles having a diameter of 16 inches (406 mm) or less, wire shall not be smaller than 0.22 inch (5.6 mm) (No. 5 gage).

For piles having a diameter of more than 16 inches (406 mm) and less than 20 inches (508 mm), wire shall not be smaller than 0.238 inch (6 mm) (No. 4 gage).

For piles having a diameter of 20 inches (508 mm) and larger, wire shall not be smaller than 0.25 inch (6.4 mm) round or 0.259 inch (6.6 mm) (No. 3 gage).

1809*A*.2.1.4 Installation. Piles shall be handled and driven so as not to cause injury or overstressing, which affects durability or strength.

1809*A*.2.2 Precast nonprestressed piles. Precast nonprestressed concrete piles shall conform to Sections 1809*A*.2.2.1 through 1809*A*.2.2.5.

1809*A*.2.2.1 Materials. Concrete shall have a 28-day specified compressive strength (f'_c) of not less than 3,000 psi (20.68 MPa).

1809*A*.2.2.2 Minimum reinforcement. The minimum amount of longitudinal reinforcement shall be 0.8 percent of the concrete section and shall consist of at least four bars.

1809*A*.2.2.2.1 Seismic reinforcement in Seismic Design Category C. Where a structure is assigned to Seismic Design Category C ~~in accordance with Section 1613~~, the following shall apply. Longitudinal reinforcement with a minimum steel ratio of 0.01 shall be provided throughout the length of precast concrete piles. Within three pile diameters of the bottom of the pile cap, the longitudinal reinforcement shall be confined with closed ties or spirals of a minimum $^3/_8$ inch (9.5 mm) diameter. Ties or spirals shall be provided at a maximum spacing of eight times the diameter of the smallest longitudinal bar, not to exceed 6 inches (152 mm). Throughout the remainder of the pile, the closed ties or spirals shall have a maximum spacing of 16 times the smallest longitudinal bar diameter not to exceed 8 inches (203 mm).

1809*A*.2.2.2.2 Seismic reinforcement in Seismic Design Category D, E or F. Where a structure is assigned to Seismic Design Category D, E or F in accordance with Section 1613*A*, the requirements for Seismic Design Category C in Section 1809*A*.2.2.2.1 shall apply except as modified by this section. Transverse confinement reinforcement consisting of closed ties or equivalent spirals shall be provided in accordance with Sections 21.4.4.1, 21.4.4.2 and 21.4.4.3 of ACI 318 within three pile diameters of the bottom of the pile cap. For other than Site Class E or F, or liquefiable sites and where spirals are used as the transverse reinforcement, a volumetric ratio of spiral reinforcement of not less than one-half that required by Section 21.4.4.1(a) of ACI 318 shall be permitted.

1809*A*.2.2.3 Allowable stresses. The allowable compressive stress in the concrete shall not exceed 33 percent of the 28-day specified compressive strength (f'_c) applied to the gross cross-sectional area of the pile. The allowable compressive stress in the reinforcing steel shall not exceed 40 percent of the yield strength of the steel (f_y) or a maximum of 30,000 psi (207 MPa). The allowable tensile stress in the reinforcing steel shall not exceed 50 percent of the yield strength of the steel (f_y) or a maximum of 24,000 psi (165 MPa).

1809*A*.2.2.4 Installation. A precast concrete pile shall not be driven before the concrete has attained a compressive strength of at least 75 percent of the 28-day specified compressive strength (f'_c), but not less than the strength sufficient to withstand handling and driving forces.

1809A.2.2.5 Concrete cover. Reinforcement for piles that are not manufactured under plant conditions shall have a concrete cover of not less than 2 inches (51 mm).

Reinforcement for piles manufactured under plant control conditions shall have a concrete cover of not less than 1.25 inches (32 mm) for No. 5 bars and smaller, and not less than 1.5 inches (38 mm) for No. 6 through No. 11 bars except that longitudinal bars spaced less than 1.5 inches (38 mm) clear distance apart shall be considered bundled bars for which the minimum concrete cover shall be equal to that for the equivalent diameter of the bundled bars.

Reinforcement for piles exposed to seawater shall have a concrete cover of not less than 3 inches (76 mm).

1809A.2.3 Precast prestressed piles. Precast prestressed concrete piles shall conform to the requirements of Sections 1809A.2.3.1 through 1809A.2.3.5.

1809A.2.3.1 Materials. Prestressing steel shall conform to ASTM A 416. Concrete shall have a 28-day specified compressive strength (f'_c) of not less than 5,000 psi (34.48 MPa).

1809A.2.3.2 Design. Precast prestressed piles shall be designed to resist stresses induced by handling and driving as well as by loads. The effective prestress in the pile shall not be less than 400 psi (2.76 MPa) for piles up to 30 feet (9144 mm) in length, 550 psi (3.79 MPa) for piles up to 50 feet (15 240 mm) in length and 700 psi (4.83 MPa) for piles greater than 50 feet (15 240 mm) in length.

Effective prestress shall be based on an assumed loss of 30,000 psi (207 MPa) in the prestressing steel. The tensile stress in the prestressing steel shall not exceed the values specified in ACI 318.

1809A.2.3.2.1 Design in Seismic Design Category C. Where a structure is assigned to Seismic Design Category C ~~in accordance with Section 1613~~, the following shall apply. The minimum volumetric ratio of spiral reinforcement shall not be less than 0.007 or the amount required by the following formula for the upper 20 feet (6096 mm) of the pile.

$\rho_s = 0.12 f'_c / f_{yh}$ **(Equation 18A-4)**

where:

f'_c = Specified compressive strength of concrete, psi (MPa).

f_{yh} = Yield strength of spiral reinforcement ≤ 85,000 psi (586 MPa).

ρ_s = Spiral reinforcement index (vol. spiral/vol. core).

At least one-half the volumetric ratio required by Equation 18A-4 shall be provided below the upper 20 feet (6096 mm) of the pile.

The pile cap connection by means of dowels as indicated in Section 1808A.2.23.1 is permitted. Pile cap connection by means of developing pile reinforcing strand is permitted provided that the pile reinforcing strand results in a ductile connection.

1809A.2.3.2.2 Design in Seismic Design Category D, E or F. Where a structure is assigned to Seismic Design Category D, E or F in accordance with Section 1613A, the requirements for Seismic Design Category C in Section 1809A.2.3.2.1 shall be met, in addition to the following:

1. Requirements in ACI 318, Chapter 21, need not apply, unless specifically referenced.

2. Where the total pile length in the soil is 35 feet (10 668 mm) or less, the lateral transverse reinforcement in the ductile region shall occur through the length of the pile. Where the pile length exceeds 35 feet (10 668 mm), the ductile pile region shall be taken as the greater of 35 feet (10 668 mm) or the distance from the underside of the pile cap to the point of zero curvature plus three times the least pile dimension.

3. In the ductile region, the center-to-center spacing of the spirals or hoop reinforcement shall not exceed one-fifth of the least pile dimension, six times the diameter of the longtitudinal strand, or 8 inches (203 mm), whichever is smaller.

4. Circular spiral reinforcement shall be spliced by lapping one full turn and bending the end of the spiral to a 90-degree hook or by use of a mechanical or welded splice complying with Sec. 12.14.3 of ACI 318.

5. Where the transverse reinforcement consists of circular spirals, the volumetric ratio of spiral transverse reinforcement in the ductile region shall comply with the following:

   $\rho_s = 0.25(f'_c/f_{yh})(A_g/A_{ch} - 1.0)[0.5 + 1.4P/(f'_c A_g)]$
   (Equation 18A-5)

   but not less than:

   $\rho_s = 0.12(f'_c/f_{yh})[0.5 + 1.4P/(f'_c A_g)]$
   (Equation 18A-6)

   and need not exceed:

   $\rho_s = 0.021$ **(Equation 18A-7)**

   where:

   A_g = Pile cross-sectional area, square inches (mm^2).

   A_{ch} = Core area defined by spiral outside diameter, square inches (mm^2).

   f'_c = Specified compressive strength of concrete, psi (MPa).

   f_{yh} = Yield strength of spiral reinforcement ≤ 85,000 psi (586 MPa).

   P = Axial load on pile, pounds (kN), as determined from Equations 16A-5 and 16A-6.

   ρ_s = Volumetric ratio (vol. spiral/ vol. core).

   ~~This required amount of spiral reinforcement is permitted to be obtained by providing an inner and outer spiral.~~

6. When transverse reinforcement consists of rectangular hoops and cross ties, the total cross-sectional area of lateral transverse reinforcement in the ductile region with spacings, and perpendicular to dimension ,h_c, shall conform to:

   $A_{sh} = 0.3sh_c(f'_c/f_{yh})(A_g/A_{ch} - 1.0)[0.5 + 1.4P/(f'_c A_g)]$ **(Equation 18A-8)**

   but not less than:

   $A_{sh} = 0.12sh_c(f'_c/f_{yh})[0.5 + 1.4P/(f'_c A_g)]$
   (Equation 18A-9)

   where:

   f_{yh} = ≤ 70,000 psi (483 MPa).

   h_c = Cross-sectional dimension of pile core measured center to center of hoop reinforcement, inch (mm).

   s = Spacing of transverse reinforcement measured along length of pile, inch (mm).

   A_{sh} = Cross-sectional area of transverse reinforcement, square inches (mm^2).

f'_c = Specified compressive strength of concrete, psi (MPa).

The hoops and cross ties shall be equivalent to deformed bars not less than No. 3 in size. Rectangular hoop ends shall terminate at a corner with seismic hooks.

Outside of the length of the pile requiring transverse confinement reinforcing, the spiral or hoop reinforcing with a volumetric ratio not less than one-half of that required for transverse confinement reinforcing shall be provided.

1809A.2.3.3 Allowable stresses. The allowable design compressive stress, f_c, in concrete shall be determined as follows:

$$f_c = 0.33 f'_c - 0.27 f_{pc} \qquad \textbf{(Equation 18A-10)}$$

where:

f'_c = The 28-day specified compressive strength of the concrete.

f_{pc} = The effective prestress stress on the gross section.

1809A.2.3.4 Installation. A prestressed pile shall not be driven before the concrete has attained a compressive strength of at least 75 percent of the 28-day specified compressive strength (f'_c), but not less than the strength sufficient to withstand handling and driving forces.

1809A.2.3.5 Concrete cover. Prestressing steel and pile reinforcement shall have a concrete cover of not less than $1^1/_4$ inches (32 mm) for square piles of 12 inches (305 mm) or smaller size and $1^1/_2$ inches (38 mm) for larger piles, except that for piles exposed to seawater, the minimum protective concrete cover shall not be less than $2^1/_2$ inches (64 mm).

1809A.3 Structural steel piles. Structural steel piles shall conform to the requirements of Sections 1809A.3.1 through 1809A.3.4.

1809A.3.1 Materials. Structural steel piles, steel pipe and fully welded steel piles fabricated from plates shall conform to ASTM A 36, ASTM A 252, ASTM A 283, ASTM A 572, ASTM A 588, ASTM A 690, ASTM A 913 or ASTM A 992.

1809A.3.2 Allowable stresses. The allowable axial stresses shall not exceed 35 percent of the minimum specified yield strength (F_y).

Exception: Where justified in accordance with Section 1808A.2.10, the allowable axial stress is permitted to be increased above $0.35F_y$, but shall not exceed $0.5F_y$.

1809A.3.3 Dimensions of H-piles. Sections of H-piles shall comply with the following:

1. The flange projections shall not exceed 14 times the minimum thickness of metal in either the flange or the web and the flange widths shall not be less than 80 percent of the depth of the section.

2. The nominal depth in the direction of the web shall not be less than 8 inches (203 mm).

3. Flanges and web shall have a minimum nominal thickness of $^3/_8$ inch (9.5 mm).

1809A.3.4 Dimensions of steel pipe piles. Steel pipe piles driven open ended shall have a nominal outside diameter of not less than 8 inches (203 mm). The pipe shall have a minimum cross section of 0.34 square inch (219 mm^2) to resist each 1,000 foot-pounds (1356 N-m) of pile hammer energy, or shall have the equivalent strength for steels having a yield strength greater than 35,000 psi (241 Mpa) or the wave equation analysis shall be permitted to be used to assess compression stresses induced by driving to evaluate if the pile section is appropriate for the selected hammer. Where pipe wall thickness less than 0.179 inch (4.6 mm) is driven open ended, a suitable cutting shoe shall be provided.

SECTION 1810*A* - CAST-IN-PLACE CONCRETE PILE FOUNDATIONS

1810*A*.1 General. The materials, reinforcement and installation of cast-in-place concrete piles shall conform to Sections 1810*A*.1.1 through 1810*A*.1.3.

1810*A*.1.1 Materials. Concrete shall have a 28-day specified compressive strength (f'_c) of not less than 2,500 psi (17.24 MPa). Where concrete is placed through a funnel hopper at the top of the pile, the concrete mix shall be designed and proportioned so as to produce a cohesive workable mix having a slump of not less than 4 inches (102 mm) and not more than 6 inches (152 mm). Where concrete is to be pumped, the mix design including slump shall be adjusted to produce a pumpable concrete.

1810*A*.1.2 Reinforcement. Except for steel dowels embedded 5 feet (1524 mm) or less in the pile and as provided in Section 1810*A*.3.4, reinforcement where required shall be assembled and tied together and shall be placed in the pile as a unit before the reinforced portion of the pile is filled with concrete except in augered uncased cast-in-place piles. Tied reinforcement in augered uncased cast-in-place piles shall be placed after piles are concreted, while the concrete is still in a semifluid state.

1810*A*.1.2.1 Reinforcement in Seismic Design Category C. Where a structure is assigned to Seismic Design Category C ~~in accordance with Section 1613~~, the following shall apply. A minimum longitudinal reinforcement ratio of 0.0025 shall be provided for uncased cast-in-place concrete drilled or augered piles, piers or caissons in the top one-third of the pile length, a minimum length of 10 feet (3048 mm) below the ground or that required by analysis, whichever length is greatest. The minimum reinforcement ratio, but no less than that ratio required by rational analysis, shall be continued throughout the flexural length of the pile. There shall be a minimum of four longitudinal bars with closed ties (or equivalent spirals) of a minimum $^3/_8$ inch (9 mm) diameter provided at 16-longitudinal-bar diameter maximum spacing. Transverse confinement reinforcement with a maximum spacing of 6 inches (152 mm) or 8-longitudinal-bar diameters, whichever is less, shall be provided within a distance equal to three times the least pile dimension of the bottom of the pile cap.

1810*A*.1.2.2 Reinforcement in Seismic Design Category D, E or F. Where a structure is assigned to Seismic Design Category D, E or F in accordance with Section 1613*A*, the requirements for Seismic Design Category C given above shall be met, in addition to the following. A minimum longitudinal reinforcement ratio of 0.005 shall be provided for uncased cast-in-place drilled or augered concrete piles, piers or caissons in the top one-half of the pile length a minimum length of 10 feet (3048 mm) below ground or throughout the flexural length of the pile, whichever length is greatest. The flexural length shall be taken as the length of the pile to a point where the concrete section cracking moment strength multiplied by 0.4 exceeds the required moment strength at that point. There shall be a minimum of four longitudinal bars with transverse confinement reinforcement provided in the pile in accordance with Sections 21.4.4.1, 21.4.4.2 and 21.4.4.3 of ACI 318 within three times the least pile dimension of the bottom of the pile cap. A transverse spiral reinforcement ratio of not less than one-half of that required in Section 21.4.4.1(a) of ACI 318 for other than Class E, F or liquefiable sites is permitted. Tie spacing throughout the remainder of the concrete section shall neither exceed 12-longitudinal-bar diameters, one-half the least dimension of the section, nor 12 inches (305 mm). Ties shall be a minimum of No. 3 bars for piles with a least dimension up to 20 inches (508 mm), and No. 4 bars for larger piles.

1810*A*.1.3 Concrete placement. Concrete shall be placed in such a manner as to ensure the exclusion of any foreign matter and to secure a full-sized shaft. Concrete shall not be placed through water except where a tremie or other approved method is used. When depositing concrete from the top of the pile, the concrete shall not be chuted directly into the pile but shall be poured in a rapid and continuous operation through a funnel hopper centered at the top of the pile.

1810*A*.2 Enlarged base piles. Enlarged base piles shall conform to the requirements of Sections 1810*A*.2.1 through 1810*A*.2.5. *Enlarged base piles shall be considered as an alternative system.*

1810*A*.2.1 Materials. The maximum size for coarse aggregate for concrete shall be $^3/_4$ inch (19.1 mm). Concrete to be compacted shall have a zero slump.

1810*A*.2.2 Allowable stresses. The maximum allowable design compressive stress for concrete not placed in a permanent steel casing shall be 25 percent of the 28-day specified compressive strength (f'_c). Where the concrete is place in a permanent steel casing, the maximum allowable concrete stress shall be 33 percent of the 28-day specified compressive strength (f'_c).

1810A.2.3 Installation. Enlarged bases formed either by compacting concrete or driving a precast base shall be formed in or driven into granular soils. Piles shall be constructed in the same manner as successful prototype test piles driven for the project. Pile shafts extending through peat or other organic soil shall be encased in a permanent steel casing. Where a cased shaft is used, the shaft shall be adequately reinforced to resist column action or the annular space around the pile shaft shall be filled sufficiently to reestablish lateral support by the soil. Where pile heave occurs, the pile shall be replaced unless it is demonstrated that the pile is undamaged and capable of carrying twice its design load.

1810A.2.4 Load-bearing capacity. Pile load-bearing capacity shall be verified by load tests in accordance with Section 1808A.2.8.3.

1810A.2.5 Concrete cover. The minimum concrete cover shall be $2^1/_2$inches (64 mm) for uncased shafts and 1 inch (25 mm) for cased shafts.

1810A.3 Drilled or augered uncased piles. Drilled or augered uncased piles shall conform to Sections 1810A.3.1 through 1810A.3.5.

1810A.3.1 Allowable stresses. The allowable design stress in the concrete of drilled or augered uncased piles shall not exceed 33 percent of the 28-day specified compressive strength (f'_c). The allowable compressive stress of reinforcement shall not exceed 40 percent of the yield strength of the steel or 25,500 psi (175.8 MPa).

1810A.3.2 Dimensions. The pile length shall not exceed 30 times the average diameter. The minimum diameter shall be 12 inches (305 mm).

Exception: The length of the pile is permitted to exceed 30 times the diameter, provided that the design and installation of the pile foundation are under the direct supervision of a registered design professional knowledgeable in the field of soil mechanics and pile foundations. The registered design professional shall certify to the building official that the piles were installed in compliance with the approved construction documents.

1810A.3.3 Installation. Where pile shafts are formed through unstable soils and concrete is placed in an open-drilled hole, a steel liner shall be inserted in the hole prior to placing the concrete. Where the steel liner is withdrawn during concreting, the level of concrete shall be maintained above the bottom of the liner at a sufficient height to offset any hydrostatic or lateral soil pressure.

Where concrete is placed by pumping through a hollow-stem auger, the auger shall be permitted to rotate in a clockwise direction during withdrawal. The auger shall be withdrawn in continuous increments. Concreting pumping pressures shall be measured and maintained high enough at all times to offset hydrostatic and lateral earth pressures. Concrete volumes shall be measured to ensure that the volume of concrete placed in each pile is equal to or greater than the theoretical volume of the hole created by the auger. Where the installation process of any pile is interrupted or a loss of concreting pressure occurs, the pile shall be redrilled to 5 feet (1524 mm) below the elevation of the tip of the auger when the installation was interrupted or concrete pressure was lost and reformed. Augered cast-in-place piles shall not be installed within six pile diameters center to center of a pile filled with concrete less than 12 hours old, unless approved by the building official. If the concrete level in any completed pile drops due to installation of an adjacent pile, the pile shall be replaced.

1810A.3.4 Reinforcement. For piles installed with a hollow-stem auger where full-length longitudinal steel reinforcement is placed without lateral ties, the reinforcement shall be placed through the hollow stem of the auger prior to filling the pile with concrete. All pile reinforcement shall have a concrete cover of not less than 2.5 inches (64 mm).

Exception: Where physical constraints do not allow the placement of the longitudinal reinforcement prior to filling the pile with concrete or where partial-length longitudinal reinforcement is placed without lateral ties, the reinforcement is allowed to be placed after the piles are completely concreted but while concrete is still in a semifluid state.

1810A.3.5 Reinforcement in Seismic Design Category ~~C,~~ D, E or F. Where a structure is assigned to Seismic Design Category ~~C,~~ D, E or F in accordance with Section 1613A, the corresponding requirements of Sections 1810A.1.2.1 and 1810A.1.2.2 shall be met.

1810A.4 Driven uncased piles. Driven uncased piles shall conform to Sections 1810A.4.1 through 1810A.4.4.

1810A.4.1 Allowable stresses. The allowable design stress in the concrete shall not exceed 25 percent of the 28-day specified compressive strength (f'_c) applied to a cross-sectional area not greater than the inside area of the drive casing or mandrel.

1810A.4.2 Dimensions. The pile length shall not exceed 30 times the average diameter. The minimum diameter shall be 12 inches (305 mm).

Exception: The length of the pile is permitted to exceed 30 times the diameter, provided that the design and installation of the pile foundation is under the direct supervision of a registered design professional knowledgeable in the field of soil mechanics and pile foundations. The registered design professional shall certify to the building official that the piles were installed in compliance with the approved design.

1810A.4.3 Installation. Piles shall not be driven within six pile diameters center to center in granular soils or within one-half the pile length in cohesive soils of a pile filled with concrete less than 48 hours old unless approved by the building official. If the concrete surface in any completed pile rises or drops, the pile shall be replaced. Piles shall not be installed in soils that could cause pile heave.

1810A.4.4 Concrete cover. Pile reinforcement shall have a concrete cover of not less than 2.5 inches (64 mm), measured from the inside face of the drive casing or mandrel.

1810A.5 Steel-cased piles. Steel-cased piles shall comply with the requirements of Sections 1810A.5.1 through 1810A.5.4.

1810A.5.1 Materials. Pile shells or casings shall be of steel and shall be sufficiently strong to resist collapse and sufficiently water tight to exclude any foreign materials during the placing of concrete. Steel shells shall have a sealed tip with a diameter of not less than 8 inches (203 mm).

1810A.5.2 Allowable stresses. The allowable design compressive stress in the concrete shall not exceed 33 percent of the 28-day specified compressive strength (f'_c). The allowable concrete compressive stress shall be 0.40 (f'_c) for that portion of the pile meeting the conditions specified in Sections 1810A.5.2.1 through 1810A.5.2.4.

1810A.5.2.1 Shell thickness. The thickness of the steel shell shall not be less than manufacturer's standard gage No. 14 gage (0.068 inch) (1.75 mm) minimum.

1810A.5.2.2 Shell type. The shell shall be seamless or provided with seams of strength equal to the basic material and be of a configuration that will provide confinement to the cast-in-place concrete.

1810A.5.2.3 Strength. The ratio of steel yield strength (f_y) to 28-day specified compressive strength (f'_c) shall not be less than six.

1810A.5.2.4 Diameter. The nominal pile diameter shall not be greater than 16 inches (406 mm).

1810A.5.3 Installation. Steel shells shall be mandrel driven their full length in contact with the surrounding soil.

The steel shells shall be driven in such order and with such spacing as to ensure against distortion of or injury to piles already in place. A pile shall not be driven within four and one-half average pile diameters of a pile filled with concrete less than 24 hours old unless approved by the building official. Concrete shall not be placed in steel shells within heave range of driving.

1810A.5.4 Reinforcement. Reinforcement shall not be placed within 1 inch (25 mm) of the steel shell. Reinforcing shall be required for unsupported pile lengths or where the pile is designed to resist uplift or unbalanced lateral loads.

1810A.5.4.1 Seismic reinforcement. Where a structure is assigned to Seismic Design Category ~~C,~~ D, E or F in accordance with Section 1613A, the reinforcement requirements for drilled or augered uncased piles in Section 1810A.3.5 shall be met.

Exception: A spiral-welded metal casing of a thickness no less than the manufacturer's standard gage No. 14 gage [0.068 inch (1.7 mm)] is permitted to provide concrete confinement in lieu of the closed ties or equivalent spirals required in an uncased concrete pile. Where used as such, the metal casing shall be protected against possible deleterious action due to soil constituents, changing water levels or other factors indicated by boring records of site conditions.

1810A.6 Concrete-filled steel pipe and tube piles. Concrete-filled steel pipe and tube piles shall conform to the requirements of Sections 1810A.6.1 through 1810A.6.5.

1810A.6.1 Materials. Steel pipe and tube sections used for piles shall conform to ASTM A 252 or ASTM A 283. Concrete shall conform to Section 1810A.1.1. The maximum coarse aggregate size shall be $^3/_4$inch (19.1 mm).

1810A.6.2 Allowable stresses. The allowable design compressive stress in the concrete shall not exceed 33 percent of the 28-day specified compressive strength (f'_c). The allowable design compressive stress in the steel shall not exceed 35 percent of the minimum specified yield strength of the steel (F_y), provided F_y shall not be assumed greater than 36,000 psi (248 MPa) for computational purposes.

Exception: Where justified in accordance with Section 1808A.2.10, the allowable stresses are permitted to be increased to 0.50 F_y.

1810A.6.3 Minimum dimensions. Piles shall have a nominal outside diameter of not less than 8 inches (203 mm) and a minimum wall thickness in accordance with Section 1809A.3.4. For mandrel-driven pipe piles, the minimum wall thickness shall be $^1/_{10}$ inch (2.5 mm).

1810A.6.4 Reinforcement. Reinforcement steel shall conform to Section 1810A.1.2. Reinforcement shall not be placed within 1 inch (25 mm) of the steel casing.

1810A.6.4.1 Seismic reinforcement. Where a structure is assigned to Seismic Design Category ~~C,~~ D, E or F in accordance with Section 1613A, the following shall apply. Minimum reinforcement no less than 0.01 times the cross-sectional area of the pile concrete shall be provided in the top of the pile with a length equal to two times the required cap embedment anchorage into the pile cap, but not less than the tension development length of the reinforcement. The wall thickness of the steel pipe shall not be less than $^3/_{16}$inch (5 mm).

1810A.6.5 Placing concrete. The placement of concrete shall conform to Section 1810A.1.3, but is permitted to be chuted directly into smooth-sided pipes and tubes without a centering funnel hopper.

1810A.7 Caisson piles. Caisson piles shall conform to the requirements of Sections 1810A.7.1 through 1810A.7.6.

1810A.7.1 Construction. Caisson piles shall consist of a shaft section of concrete-filled pipe extending to bedrock with an uncased socket drilled into the bedrock and filled with concrete. The caisson pile shall have a full-length structural steel core or a stub core installed in the rock socket and extending into the pipe portion a distance equal to the socket depth.

1810A.7.2 Materials. Pipe and steel cores shall conform to the material requirements in Section 1809A.3. Pipes shall have a minimum wall thickness of $^3/_8$inch (9.5 mm) and shall be fitted with a suitable steel-driving shoe welded to the bottom of the pipe. Concrete shall have a 28-day specified compressive strength (f'_c) of not less than 4,000 psi (27.58 MPa). The concrete mix shall be designed and proportioned so as to produce a cohesive workable mix with a slump of 4 inches to 6 inches (102 mm to 152 mm).

1810A.7.3 Design. The depth of the rock socket shall be sufficient to develop the full load-bearing capacity of the caisson pile with a minimum safety factor of two, but the depth shall not be less than the outside diameter of the pipe. The design of the rock socket is permitted to be predicated on the sum of the allowable load-bearing pressure on the bottom of the socket plus bond along the sides of the socket. The minimum outside diameter of the caisson pile shall be 18 inches (457 mm), and the diameter of the rock socket shall be approximately equal to the inside diameter of the pile.

1810A.7.4 Structural core. The gross cross-sectional area of the structural steel core shall not exceed 25 percent of the gross area of the caisson. The minimum clearance between the structural core and the pipe shall be 2 inches (51 mm). Where cores are to be spliced, the ends shall be milled or ground to provide full contact and shall be full-depth welded.

1810A.7.5 Allowable stresses. The allowable design compressive stresses shall not exceed the following: concrete, 0.33 f'_c; steel pipe, 0.35 F_y and structural steel core, 0.50 F_y.

1810A.7.6 Installation. The rock socket and pile shall be thoroughly cleaned of foreign materials before filling with concrete. Steel cores shall be bedded in cement grout at the base of the rock socket. Concrete shall not be placed through water except where a tremie or other approved method is used.

1810*A*.8 Micropiles. Micropiles shall conform to the requirements of Sections 1810*A*.8.1 through 1810*A*.8.5.

1810*A*.8.1 Construction. Micropiles shall consist of a grouted section reinforced with steel pipe or steel reinforcing. Micropiles shall develop their load-carrying capacity through a bond zone in soil, bedrock or a combination of soil and bedrock. The full length of the micropile shall contain either a steel pipe or steel reinforcement.

1810*A*.8.2 Materials. Grout shall have a 28-day specified compressive strength (f'_c) of not less than 4,000 psi (27.58 MPa). The grout mix shall be designed and proportioned so as to produce a pumpable mixture. Reinforcement steel shall be deformed bars in accordance with ASTM A 615 Grade 60 or 75 or ASTM A 722 Grade 150.

Pipe/casing shall have a minimum wall thickness of $^3/_{16}$ inch (4.8 mm) and as required to meet Section 1808*A*.2.7. Pipe/casing shall meet the tensile requirements of ASTM A 252 Grade 3, except the minimum yield strength shall be as used in the design submittal [typically 50,000 psi to 80,000 psi (345 MPa to 552 MPa)] and minimum elongation shall be 15 percent.

1810*A*.8.3 Allowable stresses. The allowable design compressive stress on grout shall not exceed 0.33 f'_c. The allowable design compressive stress on steel pipe and steel reinforcement shall not exceed the lesser of 0.4 F_y, or 32,000 psi (220 MPa). The allowable design tensile stress for steel reinforcement shall not exceed 0.60 F_y. The allowable design tensile stress for the cement grout shall be zero.

1810*A*.8.4 Reinforcement. For piles or portions of piles grouted inside a temporary or permanent casing or inside a hole drilled into bedrock or a hole drilled with grout, the steel pipe or steel reinforcement shall be designed to carry at least 40 percent of the design compression load. Piles or portions of piles grouted in an open hole in soil without temporary or permanent casing and without suitable means of verifying the hole diameter during grouting shall be designed to carry the entire compression load in the reinforcing steel. Where a steel pipe is used for reinforcement, the portion of the cement grout enclosed within the pipe is permitted to be included at the allowable stress of the grout.

1810*A*.8.4.1 Seismic reinforcement. Where a structure is assigned to Seismic Design Category C, a permanent steel casing shall be provided from the top of the pile down 120 percent times the flexural length. The flexural length shall be determined in accordance with Section 1808*A*.1. Where a structure is assigned to Seismic Design Category D, E or F, the pile shall be considered as an alternative system. In accordance with Section 104.11, *Appendix Chapter 1*, the alternative pile system design, supporting documentation and test data shall be submitted to the building official for review and approval.

1810*A*.8.5 Installation. The pile shall be permitted to be formed in a hole advanced by rotary or percussive drilling methods, with or without casing. The pile shall be grouted with a fluid cement grout. The grout shall be pumped through a tremie pipe extending to the bottom of the pile until grout of suitable quality returns at the top of the pile. The following requirements apply to specific installation methods:

1. For piles grouted inside a temporary casing, the reinforcing steel shall be inserted prior to withdrawal of the casing. The casing shall be withdrawn in a controlled manner with the grout level maintained at the top of the pile to ensure that the grout completely fills the drill hole. During withdrawal of the casing, the grout level inside the casing shall be monitored to check that the flow of grout inside the casing is not obstructed.

2. For a pile or portion of a pile grouted in an open drill hole in soil without temporary casing, the minimum design diameter of the drill hole shall be verified by a suitable device during grouting.

3. For piles designed for end bearing, a suitable means shall be employed to verify that the bearing surface is properly cleaned prior to grouting.

4. Subsequent piles shall not be drilled near piles that have been grouted until the grout has had sufficient time to harden.

5. Piles shall be grouted as soon as possible after drilling is completed.

6. For piles designed with casing full length, the casing must be pulled back to the top of the bond zone and reinserted or some other suitable means shall be employed to verify grout coverage outside the casing.

SECTION 1811*A* - COMPOSITE PILES

1811*A*.1 General. Composite piles shall conform to the requirements of Sections 1811*A*.2 through 1811*A*.5.

1811*A*.2 Design. Composite piles consisting of two or more approved pile types shall be designed to meet the conditions of installation.

1811*A*.3 Limitation of load. The maximum allowable load shall be limited by the capacity of the weakest section incorporated in the pile.

1811*A*.4 Splices. Splices between concrete and steel ~~or wood~~ sections shall be designed to prevent separation both before and after the concrete portion has set, and to ensure the alignment and transmission of the total pile load. Splices shall be designed to resist uplift caused by upheaval during driving of adjacent piles, and shall develop the full compressive strength and not less than 50 percent of the tension and bending strength of the weaker section.

1811*A*.5 Seismic reinforcement. Where a structure is assigned to Seismic Design Category ~~C,~~ D, E or F in accordance with Section 1613*A*, the following shall apply. Where concrete and steel are used as part of the pile assembly, the concrete reinforcement shall comply with that given in Sections 1810*A*.1.2.1 and 1810*A*1.2.2 or the steel section shall comply with Section 1810*A*.6.4.1.

SECTION 1812*A* - PIER FOUNDATIONS

1812*A*.1 General. Isolated and multiple piers used as foundations shall conform to the requirements of Sections 1812*A*.2 through 1812*A*.10, as well as the applicable provisions of Section 1808*A*.2.

1812*A*.2 Lateral dimensions and height. The minimum dimension of isolated piers used as foundations shall be 2 feet (610 mm), and the height shall not exceed 12 times the least horizontal dimension.

1812*A*.3 Materials. Concrete shall have a 28-day specified compressive strength (f'_c) of not less than 2,500 psi (17.24 MPa). Where concrete is placed through a funnel hopper at the top of the pier, the concrete mix shall be designed and proportioned so as to produce a cohesive workable mix having a slump of not less than 4 inches (102 mm) and not more than 6 inches (152 mm). Where concrete is to be pumped, the mix design including slump shall be adjusted to produce a pumpable concrete.

1812*A*.4 Reinforcement. Except for steel dowels embedded 5 feet (1524 mm) or less in the pier, reinforcement where required shall be assembled and tied together and shall be placed in the pier hole as a unit before the reinforced portion of the pier is filled with concrete.

> **Exception:** Reinforcement is permitted to be wet set and the $2^1/_2$- inch (64 mm) concrete cover requirement be reduced to 2 inches (51 mm) for Group R-3 and U occupancies not exceeding two stories of light-frame construction, provided the construction method can be demonstrated to the satisfaction of the building official.

Reinforcement shall conform to the requirements of Sections 1810*A*.1.2.1 and 1810*A*.1.2.2.

Exceptions:

1. Isolated piers supporting posts of Group R-3 and U occupancies not exceeding two stories of light-frame construction are permitted to be reinforced as required by rational analysis but not less than a minimum of one No. 4 bar, without ties or spirals, when detailed so the pier is not subject to lateral loads and the soil is determined to be of adequate stiffness.

2. Isolated piers supporting posts and bracing from decks and patios appurtenant to Group R-3 and U occupancies not exceeding two stories of light-frame construction are permitted to be reinforced as required by rational analysis but not less than one No. 4 bar, without ties or spirals, when the lateral load ,E, to the top of the pier does not exceed 200 pounds (890 N) and the soil is determined to be of adequate stiffness.

3. Piers supporting the concrete foundation wall of Group R-3 and U occupancies not exceeding two stories of light-frame construction are permitted to be reinforced as required by rational analysis but not less than two No. 4 bars, without ties or spirals, when it can be shown the concrete pier will not rupture when designed for the maximum seismic load ,E_m, and the soil is determined to be of adequate stiffness.

4. Closed ties or spirals where required by Section 1810*A*.1.2.2 are permitted to be limited to the top 3 feet (914 mm) of the piers 10 feet (3048 mm) or less in depth supporting Group R-3 and U occupancies of Seismic Design Category D, not exceeding two stories of light-frame construction.

1812*A*.5 Concrete placement. Concrete shall be placed in such a manner as to ensure the exclusion of any foreign matter and to secure a full-sized shaft. Concrete shall not be placed through water except where a tremie or other approved method is used. When depositing concrete from the top of the pier, the concrete shall not be chuted directly into the pier but shall be poured in a rapid and continuous operation through a funnel hopper centered at the top of the pier.

1812*A*.6 Belled bottoms. Where pier foundations are belled at the bottom, the edge thickness of the bell shall not be less than that required for the edge of footings. Where the sides of the bell slope at an angle less than 60 degrees (1 rad) from the horizontal, the effects of vertical shear shall be considered.

1812*A*.7 Masonry. Where the unsupported height of foundation piers exceeds six times the least dimension, the allowable working stress on piers of unit masonry shall be reduced in accordance with ACI 530/ASCE 5/TMS 402.

1812*A*.8 Concrete. ~~Where adequate lateral support is not provided, and the unsupported height to least lateral dimension does not exceed three, piers of plain concrete shall be designed and constructed as pilasters in accordance with ACI 318. Where the unsupported height to least lateral dimension exceeds three, piers~~ *Piers* shall be constructed of reinforced concrete, and shall conform to the requirements for columns in ACI 318.

> **Exception:** *Not permitted by OSHPD and DSA-SS*. ~~Where adequate lateral support is furnished by the surrounding materials as defined in Section 1808.2.9, piers are permitted to be constructed of plain or reinforced concrete. The requirements of ACI 318 for bearing on concrete shall apply.~~

1812*A*.9 Steel shell. Where concrete piers are entirely encased with a circular steel shell, and the area of the shell steel is considered reinforcing steel, the steel shall be protected under the conditions specified in Section 1808*A*.2.17. Horizontal joints in the shell shall be spliced to comply with Section 1808*A*.2.7.

1812*A*.10 Dewatering. Where piers are carried to depths below water level, the piers shall be constructed by a method that will provide accurate preparation and inspection of the bottom, and the depositing or construction of sound concrete or other masonry in the dry.

Notation [For DSA-SS]:
Authority: Education Code Sections 17310, 81142; Health & Safety Code Section 16022
Reference(s): Education Code Sections 17280 - 17317, and 811130 - 81149; Health & Safety Code Sections 16000 – 16023

Notation [For OSHPD]:
Authority: Health and Safety Code Section 129850
Reference: Health and Safety Code Sections 1275, 129850 and 129790

CHAPTER 19 - CONCRETE

2001 CBC	PROPOSED ADOPTION	OSHPD		Comments
		2	3	
	Adopt entire chapter without amendments		X	
	Adopt entire chapter with amendments listed below	X		
	Adopt only those sections listed below			
	1908.1.10	X		
1923.3.5	*1912.2*	X		Relocated existing California Building Standards into IBC format

REPEAL OF EXISTING CALIFORNIA AMENDMENTS IN PART OR IN WHOLE THAT ARE NO LONGER NECESSARY AS FOLLOWS:

2001 CBC SECTION 1909 – STRENGTH AND SERVICEABILITY REQUIREMENTS: Repeal amendment in the following subsection.

~~*1909.3.1.1*~~.

2001 CBC SECTION 1921 – REINFORCED CONCRETE STRUCTURES RESISTING FORCES INDUCED BY EARTHQUAKE MOTIONS: Repeal all amendments in following subsections.

~~*1921.0, 1921.6.6.3 1921.6.6.5, 1921.7.2.2*~~ *and* ~~*1921.7.2.3*~~.

Notation [For OSHPD]:
Authority: Health and Safety Code Section 129850
Reference: Health and Safety Code Sections 1275 and 129850

Italics are used for text within Sections 1903 through 1908 of this code to indicate provisions that differ from ACI 318.

EXPRESS TERMS

SECTION 1901 GENERAL

1901.1 Scope. The provisions of this chapter shall govern the materials, quality control, design and construction of concrete used in structures.

SECTION 1908 MODIFICATIONS TO ACI 318

1908.1 General. The text of ACI 318 shall be modified as indicated in Sections 1908.1.1 through 1908.1.16.

…….

1908.1.10 ACI 318, Section 21.10.1.1. Modify ACI 318, Section 21.10.1.1, to read as follows:
21.10.1.1 - Foundations resisting earthquake-induced forces or transferring earthquake-induced forces between a structure and the ground shall comply with the requirements of Section 21.10 and other applicable provisions of ACI 318 *unless modified by Chapter 18 of the California* ~~*International*~~ *Building Code*.

1908.1.12 ACI 318, Section 21.12.5. Modify ACI 318, Section 21.12.5, by adding new Section 21.12.5.6 to read as follows: *21.12.5.6 - Columns supporting reactions from discontinuous stiff members, such as walls, shall be designed for the special load combinations in Section 1605.4 of the California ~~International~~ Building Code and shall be provided with transverse reinforcement at the spacing, s_o, as defined in 21.12.5.2 over their full height beneath the level at which the discontinuity occurs. This transverse reinforcement shall be extended above and below the column as required in 21.4.4.5.*

Notation [For OSHPD]:
Authority: Health and Safety Code Section 129850
Reference: Health and Safety Code Sections 1275 and 129850

SECTION 1912 ANCHORAGE TO CONCRETE— STRENGTH DESIGN

1912.1 Scope. The provisions of this section shall govern the strength design of anchors installed in concrete for purposes of transmitting structural loads from one connected element to the other. Headed bolts, headed studs and hooked (J- or L-) bolts cast in concrete and expansion anchors and undercut anchors installed in hardened concrete shall be designed in accordance with Appendix D of ACI 318 as modified by Section 1908.1.16, provided they are within the scope of Appendix D.

Exception: Where the basic concrete breakout strength in tension of a single anchor, N_b, is determined in accordance with Equation (D-7), the concrete breakout strength requirements of Section D.4.2.2 shall be considered satisfied by the design procedures of Sections D.5.2 and D.6.2 for anchors exceeding 2 inches (51 mm) in diameter or 25 inches (635 mm) tensile embedment depth.

The strength design of anchors that are not within the scope of Appendix D of ACI 318, and as amended above, shall be in accordance with an approved procedure.

1912.2 (Relocated from 1923.3.5, 2001 CBC) [For OSHPD 2] Post Installed Anchors in Concrete Tests. ~~Drilled-in expansion bolts or epoxy-type anchors in concrete.~~ *When drilled-in expansion-type anchors or other post installed anchors acceptable to enforcement agency are used in lieu of cast-in place bolts, the allowable shear and tension values and installation verification test loads shall be acceptable to the enforcement agency.*

When expansion-type anchors are listed for sill plate bolting applications, 10 percent of the anchors shall be tension tested to twice the allowable tension value for bolts of the same diameter.

When expansion-type anchors are used for other structural applications, such as hold-down bolts, all such expansion anchors shall be tension tested to twice the allowable tension value for bolts of the same diameter.

When expansion-type anchors are used for nonstructural applications such as equipment anchorage, 50 percent or alternate bolts in a group, including at least one-half the anchors in each group, shall be tension tested to twice the allowable tension value.

The tension testing of the expansion anchors shall be done in the presence of the ~~project~~ special inspector and a report of the test results shall be submitted to the enforcement agency. If any anchors fail the tension-testing requirements, the additional testing requirements shall be acceptable to the enforcement agency. The above requirements shall also apply to other post installed anchors acceptable to enforcement agency and bolts or anchors set in concrete with chemical if the long-term durability and stability of the chemical material and its resistance to loss of strength and chemical change at elevated temperatures are established to the satisfaction of the enforcement agency.

Notation [For OSHPD]:
Authority: Health and Safety Code Section 129850
Reference: Health and Safety Code Sections 1275 and 129850

Chapter 19*A* – Concrete

2001 CBC	PROPOSED ADOPTION	OSHPD		DSA-SS	Comments
		1	4		
	Adopt entire chapter without amendments				
	Adopt entire chapter with amendments listed below	X	X	X	
	Adopt only those sections listed below				
	1901A.1.1 CA	X	X	X	
	1901A.1.2 CA	X	X	X	
	1903A.1	X	X	X	
1903A.3.2	*1903A.3 CA*	X	X	X	Relocated existing California Building Standards into IBC format
1903A.5.2	*1903A.4 CA*	X	X	X	Relocated existing California Building Standards into IBC format
1903A.6.6 CA	*1903A.5 CA*	X	X	X	Relocated existing California Building Standards into IBC format
1905A.1.3	*1905A.1.1*	X	X	X	Relocated existing California Building Standards into IBC format
1905.3.3.2, Item 7, CA	*1905A.2*	X	X	X	Relocated existing California Building Standards into IBC format
1905A.6.1.3	*1905A.6.2*	X	X	X	Relocated existing California Building Standards into IBC format
1905A.6.1.1	*1905A.6.2.1 CA*	X	X	X	Relocated existing California Building Standards into IBC format
1905A.8.3	*1905A.8*	X	X	X	Relocated existing California Building Standards into IBC format
1905A.10.10 CA	*1905A.10.1 CA*	X	X	X	Relocated existing California Building Standards into IBC format
1905A.12.4 CA	*1905A.12*	X	X	X	Relocated existing California Building Standards into IBC format
1906A.2.1	*1906A.2*	X	X	X	Relocated existing California Building Standards into IBC format
1906A.3.13 CA	*1906A.3.1 CA*	X	X	X	Relocated existing California Building Standards into IBC format
1906A.3.14 CA	*1906A.3.2 CA*	X	X	X	Relocated existing California Building Standards into IBC format
1906A.4.3	*1906A.4*	X	X	X	Relocated existing California Building Standards into IBC format
1906A.4.7 CA	*1906A.4.1 CA*	X	X	X	Relocated existing California Building Standards into IBC format
1907A.5.5 CA	*1907A.5.1 CA*	X	X	X	Relocated existing California Building Standards into IBC format

1907A.7.1	*1907A.7.1*	X	X	X	Relocated existing California Building Standards into IBC format
	1908A.1	X	X	X	
1908A.11.5 CA	*1908A.1.1 CA*	X	X	X	Relocated existing California Building Standards into IBC format
1908A.11.6 CA	*1908A.1.2 CA*	X	X	X	Relocated existing California Building Standards into IBC format
1908A.11.9 CA	*1908A.1.3 CA*	X	X	X	Relocated existing California Building Standards into IBC format
1910A.5.3	*1908A.1.4 CA*	X	X	X	Relocated existing California Building Standards into IBC format
1912A.14.3.6	*1908A.1.5 CA*	X	X	X	Relocated existing California Building Standards into IBC format
1914A.2.6	*1908A.1.7 CA*	X	X	X	Relocated existing California Building Standards into IBC format
1914A.3.5	*1908A.1.8 CA*	X	X	X	Relocated existing California Building Standards into IBC format
1914A.3.8	*1908A.1.9 CA*	X	X	X	Relocated existing California Building Standards into IBC format
1914A.5	*1908A.1.10 CA*	X	X	X	Relocated existing California Building Standards into IBC format
1914A.6.1 CA	*1908A.1.11 CA*	X	X	X	Relocated existing California Building Standards into IBC format
1914A.10 CA	*1908A.1.12 CA*	X	X	X	Relocated existing California Building Standards into IBC format
1915A.2.1	*1908A.1.13 CA*	X	X	X	Relocated existing California Building Standards into IBC format
1915A.2.2.2	*1908A.1.14 CA*	X	X	X	Relocated existing California Building Standards into IBC format
1915A.8.3.2	*1908A.1.15 CA*	X	X	X	Relocated existing California Building Standards into IBC format
1916A.3.3 CA	*1908A.1.16 CA*	X	X	X	Relocated existing California Building Standards into IBC format
1916A.11 CA	*1908A.1.17 CA*	X	X	X	Relocated existing California Building Standards into IBC format
1916A.12 CA	*1908A.1.18 CA*	X	X	X	Relocated existing California Building Standards into IBC format
1917A.5.1.1, 1917A.5.1.1	*1908A.1.19 CA*	X	X	X	Relocated existing California Building Standards into IBC format
1918A.2.3.2 CA	*1908A.1.20 CA*	X	X	X	Relocated existing California Building Standards into IBC format
1918A.2.4.2 CA	*1908A.1.21 CA*	X	X	X	Relocated existing California Building Standards into IBC format
1918A.2.7 CA	*1908A.1.22 CA*	X	X	X	Relocated existing California Building Standards into IBC format
1918A.6.4 CA	*1908A.1.23 CA*	X	X	X	Relocated existing California Building Standards into IBC format

1918A.9.2.2	*1908A.1.24 CA*	X	X	X	Relocated existing California Building Standards into IBC format
1918A.9.2.3	*1908A.1.25 CA*	X	X	X	Relocated existing California Building Standards into IBC format
1918A.12.7 CA	*1908A.1.26 CA*	X	X	X	Relocated existing California Building Standards into IBC format
1918A.19.5 CA	*1908A.1.27 CA*	X	X	X	Relocated existing California Building Standards into IBC format
1918A.21 CA	*1908A.1.28 CA*	X	X	X	Relocated existing California Building Standards into IBC format
1921A.2.1.2	*1908A.1.30CA*	X	X	X	Relocated existing California Building Standards into IBC format
	1908A.1.32	X	X	X	
1921A.2.5.5	*1908A.1.33 CA*	X	X	X	Relocated existing California Building Standards into IBC format
1921A.4.4.1 CA	*1908A.1.34 CA*	X	X	X	Relocated existing California Building Standards into IBC format
1921A.4.4.7 CA	*1908A.1.35 CA*	X	X	X	Relocated existing California Building Standards into IBC format
1921A.5.4.5 CA	*1908A.1.36 CA*	X	X	X	Relocated existing California Building Standards into IBC format
1921A.6.2.2	*1908A.1.37 CA*	X	X	X	Relocated existing California Building Standards into IBC format
1921A.6.6.3.2 CA	*1908A.1.38 CA*	X	X	X	Relocated existing California Building Standards into IBC format
1921A.6.12	*1908A.1.41 CA*	X	X	X	Relocated existing California Building Standards into IBC format
1921A.6.6.4 CA	*1908A.1.42 CA*	X	X	X	Relocated existing California Building Standards into IBC format
1922A.1 CA	*1909A.1*	X	X	X	Relocated existing California Building Standards into IBC format
	1912A.1	X	X	X	
1924A.1	*1913A.1*	X	X	X	Relocated existing California Building Standards into IBC format
1924A.7	*1913A.7*	X	X	X	Relocated existing California Building Standards into IBC format
1924A.10	*1913A.10*	X	X	X	Relocated existing California Building Standards into IBC format
1924A.10	*1913A.10.2*	X	X	X	Relocated existing California Building Standards into IBC format
1924A.12	*1913A.11*	X	X	X	Relocated existing California Building Standards into IBC format
1924A.13	*1913A.12*	X	X	X	Relocated existing California Building Standards into IBC format
1924A.14	*1913A.13*	X	X	X	Relocated existing California Building Standards into IBC format

	1914A.1	X	X	X	
1929A.1 CA	*1916A.1 CA*	X	X	X	Relocated existing California Building Standards into IBC format
1929A.2 CA	*1916A.2 CA*	X	X	X	Relocated existing California Building Standards into IBC format
1929A.3 CA	*1916A.3 CA*	X	X	X	Relocated existing California Building Standards into IBC format
1929A.4 CA	*1916A.6 CA*	X	X	X	Relocated existing California Building Standards into IBC format
1929A.5 CA	*1916A.8 CA*	X	X	X	Relocated existing California Building Standards into IBC format
1929A.6 CA	*1916A.11 CA*	X	X	X	Relocated existing California Building Standards into IBC format
1929A.7 CA	*1916A.13 CA*	X	X	X	Relocated existing California Building Standards into IBC format
1923A.3.5	*1916A.8 CA*	X	X	X	Relocated existing California Building Standards into IBC format
1930A CA	*1917A CA*	X	X	X	Relocated existing California Building Standards into IBC format

REPEAL OF EXISTING CALIFORNIA AMENDMENTS IN PART OR IN WHOLE THAT ARE NO LONGER NECESSARY AS FOLLOWS:

2001 CBC DIVISION I – GENERAL

~~2001 CBC SECTION 1900A – GENERAL:~~ Repeal all amendments in this section.

2001 CBC DIVISION II

~~2001 CBC SECTION 1901A – SCOPE:~~ Repeal all amendments in this section.

~~2001 CBC SECTION 1902A – DEFINITION:~~ Repeal all amendments in this section.

2001 CBC SECTION 1903A – SPECIFICATIONS FOR TESTS AND MATERIALS: Repeal all amendments in following sections.

~~1903A.1.1,1903A.1.4, 1903A.3.2~~ including all subsections, ~~1903A.6.1,1903A.6.9, 1903A.8~~ and ~~1903A.9.~~

~~2001 CBC SECTION 1904A – DURABILITY REQUIREMENTS:~~ Repeal all amendments in this section.

2001 CBC SECTION 1905A – CONCRETE QUALITY, MIXING AND PLACING: Repeal all amendments in following sections.

~~1905A.1.1, 1905A.1.3, 1905A.2.3, 1905A.3, 1905A.3.1.1, 1905A.3.1.2, 1905A.3.2.2, 1905A.3.3.2~~ item # ~~4, 1905A.4~~ including all subsections, ~~1905A.5~~ including all subsections, 1905A.6.1.3, ~~905A.6.2.1~~ including all subsections, ~~1905A.6.2.2~~ including all subsections, ~~1905A.6.2.3, 1905A.6.3.1, 1905A.6.3.2, 1905A.6.4~~ including all subsections, ~~1905A.7.1~~ including all subsections, ~~1905A.8.3, 1905A.10.4~~ and ~~1905A.10.9.~~

2001 CBC SECTION 1906A – FORMWORK, EMBEDDED PIPES AND CONSTRUCTION JOINTS: Repeal all amendments in following sections.

~~1906A.2.2.1, 1906A.3.1~~ and ~~1906A.3.5~~

2001 CBC SECTION 1907A – DETAILS OF REINFORCEMENT: Repeal all amendments in following sections.

~~*1907A.3.1, 1907A.3.2, 1907A.5.2*~~ *and* ~~*1907A.10.5.6.*~~

2001 CBC SECTION 1908A – ANALYSIS AND DESIGN: Repeal all amendments in following sections.

~~*1908A.11, 1908A.11.5.2, 1908A.11.5.3, 1908A.11.6.1*~~ *and* ~~*1908A.11.6.2.*~~

~~2001 CBC SECTION 1909A – STRENGTH AND SERVICEABILITY REQUIREMENTS:~~ Repeal all amendments in this section.

~~2001 CBC SECTION 1911A – SHEAR AND TORSION:~~ Repeal all amendments in this section.

2001 CBC SECTION 1914A – WALLS: Repeal all amendments in following sections.

~~*1914A.2.3*~~ *and* ~~*1914A.9.*~~

2001 CBC SECTION 1915A – FOOTINGS: Repeal all amendments in following sections.

~~*1915A.2.2*~~ *including all subsection and* ~~*1915A.11.*~~

2001 CBC SECTION 1916A – PRECAST CONCRETE: Repeal all amendment in the following section.

~~*1916A.7*~~ *including all subsection.*

2001 CBC SECTION 1918A – PRESTRESSED CONCRETE: Repeal all amendment in the following section.

~~*1918A.18.1*~~ *and* ~~*1918A.19.2.*~~

~~2001 CBC SECTION 1920A – SHEAR AND TORSION:~~ Repeal all amendments in this section.

2001 CBC SECTION 1921A – REINFORCED CONCRETE STRUCTURES RESISTING FORCES INDUCED BY EARTHQUAKE MOTIONS: Repeal all amendments in following section.

~~*1921A.0, 1921A.2.1.3, 1921A.2.1.7, 1921A.2.4.1, 1921A.4.3.2, 1921A.6.6.5.2, 1921A.7.2.3*~~ *and* ~~*1921A.8.*~~

2001 CBC DIVISION III – DESIGN STANDARD FOR ANCHORAGE TO CONCRETE.

2001 CBC SECTION 1923A – ANCHORAGE TO CONCRETE: Repeal all amendments in following section.

~~*1923A.1, 1923A.2*~~*, and* ~~*1923A.3*~~ *including all subsections except 1923A.3.5.*

2001 CBC DIVISION IV – DESIGN AND CONSTRUCTION STANDARD FOR SHORTCRETE.

2001 CBC SECTION 1924A – SHORTCRETE: Repeal all amendments in following section.

~~*1924A.4*~~ *and* ~~*1924A.11.1*~~*.*

~~2001 CBC DIVISION V – DESIGN STANDARD FOR REINFORCED GYPSUM CONCRETE:~~ Repeal all amendments in this division.

~~2001 CBC DIVISION VII – UNIFIED DESIGN PROVISIONS:~~ Repeal all amendments in this division.

2001 CBC CHAPTER 19A - TABLES: Repeal all amendments in following tables.

~~*Table's 19A-A-8*~~ *and* ~~*19-A-D*~~*.*

<u>EXPRESS TERMS</u>

Italics are used for text within Sections 1903A through 1908A of this code to indicate provisions that differ from ACI 318. *State of California amendments are shown in italics and underlined.*

SECTION 1901*A* - GENERAL

1901*A*.1 Scope. The provisions of this chapter shall govern the materials, quality control, design and construction of concrete used in structures.

1901A.1.1 Application *The scope of application of Chapter 19A is as follows:*

1. Applications listed in Section 109.2, regulated by the Division of the State Architect-Structural Safety (DSA-SS). These applications include public elementary and secondary schools, community colleges and state-owned or state-leased essential services buildings.

2. Applications listed in Section 110.1, and 110.4, regulated by the Office of Statewide Health Planning and Development (OSHPD). These applications include hospitals, skilled nursing facilities, intermediate care facilities and correctional treatment centers.

Exception: [For OSHPD 2]: *Single-story Type V skilled nursing or intermediate care facilities utilizing wood-frame or light-steel-frame construction as defined in Health and Safety Code Section 129725, which shall comply with CBC Chapter 16 and any applicable amendments therein.*

1901A.1.2 Amendments in this chapter. *DSA - SS and OSHPD adopt this chapter and all amendments.*

Exception: *Amendments adopted by only one agency appear in this chapter preceded with the appropriate acronym of the adopting agency, as follows:*

1. Division of the State Architect - Structural Safety:

[DSA-SS] - *For applications listed in Section 109.2*

2. Office of Statewide Health Planning and Development:

[OSHPD 1] *- For applications listed in Section 110.1*

[OSHPD 4] *- For applications listed in Section 110.4*

1901*A*.2 Plain and reinforced concrete. Structural concrete shall be designed and constructed in accordance with the requirements of this chapter and ACI 318 as amended in Section 1908*A* of this code. Except for the provisions of Sections 1904*A* and 1910*A*, the design and construction of slabs on grade shall not be governed by this chapter unless they transmit vertical loads or lateral forces from other parts of the structure to the soil.

1901*A*.3 Source and applicability. The format and subject matter of Sections 1902*A* through 1907*A* of this chapter are patterned after, and in general conformity with, the provisions for structural concrete in ACI 318.

1901*A*.4 Construction documents. The construction documents for structural concrete construction shall include:

1. The specified compressive strength of concrete at the stated ages or stages of construction for which each concrete element is designed.

2. The specified strength or grade of reinforcement.

3. The size and location of structural elements, reinforcement, and anchors.

4. Provision for dimensional changes resulting from creep, shrinkage and temperature.

5. The magnitude and location of prestressing forces.

6. Anchorage length of reinforcement and location and length of lap splices.

7. Type and location of mechanical and welded splices of reinforcement.

8. Details and location of contraction or isolation joints specified for plain concrete.

9. Minimum concrete compressive strength at time of posttensioning.

10. Stressing sequence for posttensioning tendons.

11. For structures assigned to Seismic Design Category D, E or F, a statement if slab on grade is designed as a structural diaphragm (see Section 21.10.3.4 of ACI 318).

1901*A*.5 Special inspection. The special inspection of concrete elements of buildings and structures and concreting operations shall be as required by Chapter 17*A*.

SECTION 1902*A* - DEFINITIONS

1902*A*.1 General. The words and terms defined in ACI 318 shall, for the purposes of this chapter and as used elsewhere in this code for concrete construction, have the meanings shown in ACI 318.

SECTION 1903*A* - SPECIFICATIONS FOR TESTS AND MATERIALS

1903*A*.1 General. Materials used to produce concrete, concrete itself and testing thereof shall comply with the applicable standards listed in ACI 318. *Where required, special inspections and tests shall be in accordance with Chapter 17A and Section 1916A.*

1903*A*.2 Glass fiber reinforced concrete. *Glass fiber reinforced concrete (GFRC) and the materials used in such concrete shall be in accordance with the PCI MNL 128 standard.*

1903A.3 Modify ACI 318 Section 3.3.2 by adding the following:

(Relocated from 1903A.3.2, 2001 CBC) Aggregate size limitations waiver shall be approved by enforcement agency.

Evidence that the aggregate used is not reactive in the presence of cement alkalis may be required by the enforcement agency. If new aggregate sources are to be used or if past experience indicates problems with existing aggregate sources, test the aggregate for potential reactivity according to ASTM C 289 to determine potential reactivity in the presence of cement.

If the results of the test are other than innocuous, selected concrete proportions using the aggregate (see Section 1905A.2) shall be tested in accordance with ASTM C 1567. If the results of this test indicate an expansion greater than 0.10 percent at 16-days age, provide mitigation with one of the cementitious material systems noted below such that an expansion of less than 0.10 percent at 16-days age is obtained:

1. Low-alkali portland cement containing not more than 0.6 percent total alkali when calculated as sodium oxide, as determined by the method given in ASTM C 114.

2. Blended hydraulic cement, Type IS or IP, conforming to ASTM C 595, except that Type IS cement shall not contain less than 40 percent slag constituent.

3. Replacement of not less than 15 percent by weight of the portland cement used by a mineral admixture conforming to ASTM C 618 for Class N or F materials (Class C is not permitted).

4. Replacement of not less than 40 percent by weight of the portland cement used by a ground granulated blast-furnace slag conforming to ASTM C 989.

1903A.4 Welding of reinforcing bars - Modify ACI 318 Section 3.5.2 by adding the following:

(Relocated from 1903A.5.2, 2001 CBC) If mill test reports are not available, chemical analysis shall be made of bars representative of the bars to be welded. Bars with a carbon equivalent (C.E.) above 0.75 shall not be welded. Welding shall not be done on or within two bar diameters of any bent portion of a bar that has been bent cold. Welding of crossing bars shall not be permitted for assembly of reinforcement unless authorized by the structural engineer and approved by the enforcement agency per approved procedures.

1903A.5 Fly Ash - Replace ACI 318 Section 3.6.6 as follows:

(Relocated from 1903A.6.6, 2001 CBC) Fly ash or other pozzolan can be used as a partial substitute for ASTM 150 portland cement, as follows:

1. *Fly ash or other pozzolan shall conform to ASTM C 618 for Class N or Class F materials (Class C is not permitted), and*

2. *More than 15 percent by weight of fly ash or other pozzolans shall be permitted to be substituted for ASTM C 150 portland cement if the mix design is proportioned ~~by Method B or C~~ per Section 1905A.3. See Section 1904A for durability requirements.*

3. *More than 40 percent by weight of ground-granulated blast-furnace slag conforming to ASTM C 989 shall be permitted to be substituted for ASTM C 150 portland cement if the mix design is proportioned ~~by Method B or C~~ per Section 1905A.3. See Section 1904A for durability requirements.*

SECTION 1904*A* - DURABILITY REQUIREMENTS

1904*A*.1 Water-cementitious materials ratio. Where maximum water-cementitious materials ratios are specified in ACI 318, they shall be calculated in accordance with ACI 318, Section 4.1.

1904*A*.2 Freezing and thawing exposures. Concrete that will be exposed to freezing and thawing, deicing chemicals or other exposure conditions as defined below shall comply with Sections 1904*A*.2.1 through 1904*A*.2.3.

1904*A*.2.1 Air entrainment. Concrete exposed to freezing and thawing or deicing chemicals shall be air entrained in accordance with ACI 318, Section 4.2.1:

1904*A*.2.2 Concrete properties. Concrete that will be subject to the following exposures shall conform to the corresponding maximum water-cementitious materials ratios and minimum specified concrete compressive strength requirements of ACI 318, Section 4.2.2:

1. Concrete intended to have low permeability where exposed to water;

2. Concrete exposed to freezing and thawing in a moist condition or deicer chemicals; or

3. Concrete with reinforcement where the concrete is exposed to chlorides from deicing chemicals, salt, salt water, brackish water, seawater or spray from these sources.

   Exception: *For occupancies and appurtenances thereto in Group R occupancies that are in buildings less than four stories in height, normal-weight aggregate concrete shall comply with the requirements of Table 1904A.2.2 based on the weathering classification (freezing and thawing) determined from Figure 1904A.2.2.*

In addition, concrete exposed to deicing chemicals shall conform to the limitations of Section 1904*A*.2.3.

TABLE 1904*A*.2.2 MINIMUM SPECIFIED COMPRESSIVE STRENGTH (f'_c)

TYPE OR LOCATION OF CONCRETE CONSTRUCTION	MINIMUM SPECIFIED COMPRESSIVE STRENGTH (f'_c at 28 days, psi)		
	Negligible exposure	Moderate exposure	Severe exposure
Basement walls[c] and foundations not exposed to the weather	2,500	2,500	2,500[a]
Basement slabs and interior slabs on grade, except	2,500	2,500	2,500[a]

garage floor slabs			
Basement walls[c], foundation walls, exterior walls and other vertical concrete surfaces exposed to the weather	2,500	3,000[b]	3,000[b]
Driveways, curbs, walks, patios, porches, carport slabs, steps and other flatwork exposed to the weather, and garage floor slabs	2,500	3,000[b, d]	3,500[b, d]

For SI: 1 pound per square inch = 0.00689 MPa.

a. Concrete in these locations that can be subjected to freezing and thawing during construction shall be of air-entrained concrete in accordance with Section 1904A.2.1.

b. Concrete shall be air entrained in accordance with Section 1904A.2.1.

c. Structural plain concrete basement walls are exempt from the requirements for exposure conditions of Section 1904A.2.2 (see Section 1909A.6.1).

d. For garage floor slabs where a steel trowel finish is used, the total air content required by Section 1904A.2.1 is permitted to be reduced to not less than 3 percent, provided the minimum specified compressive strength of the concrete is increased to 4,000 psi.

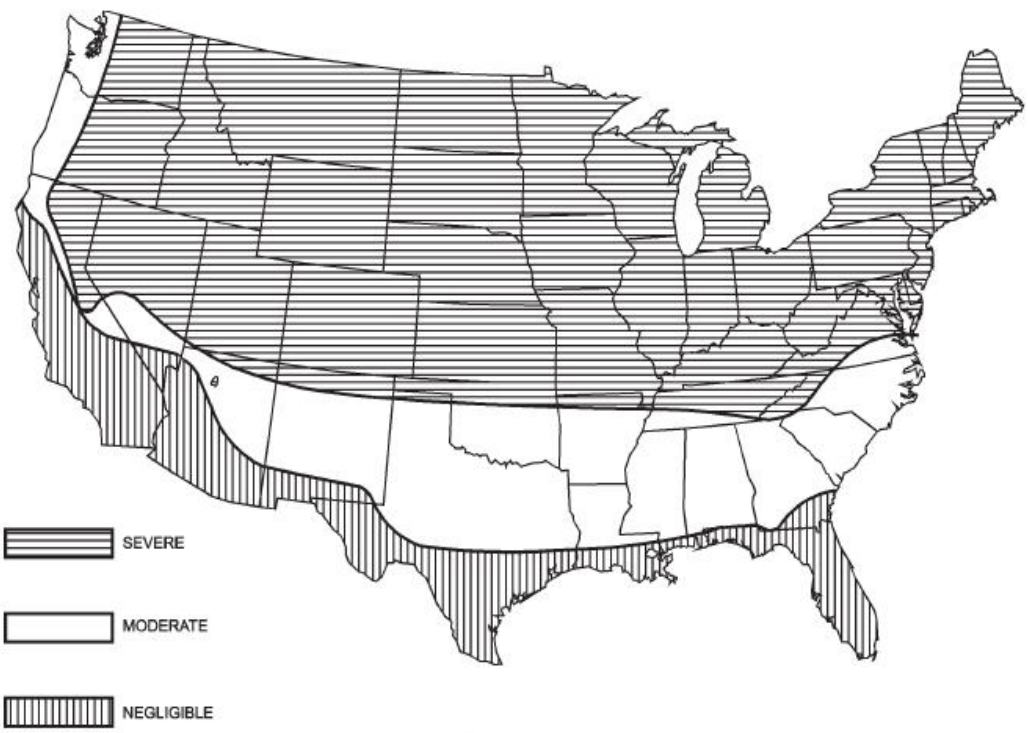

a. Lines defining areas are approximate only. Local areas can be more or less severe than indicated by the region classification.

b. A "severe" classification is where weather conditions encourage or require the use of deicing chemicals or where there is potential for a continuous presence of moisture during frequent cycles of freezing and thawing. A "moderate" classification is where weather conditions occasionally expose concrete in the presence of moisture to freezing and thawing, but where deicing chemicals are not generally used. A "negligible" classification is where weather conditions rarely expose concrete in the presence of moisture to freezing and thawing.

c. Alaska and Hawaii are classified as severe and negligible, respectively.

FIGURE 1904*A*.2.2 WEATHERING PROBABILITY MAP FOR CONCRETE[a, b, c]

1904*A*.2.3 Deicing chemicals. For concrete exposed to deicing chemicals, the maximum weight of fly ash, other pozzolans, silica fume or slag that is included in the concrete shall not exceed the percentages of the total weight of cementitious materials permitted by ACI 318, Section 4.2.3.

1904*A*.3 Sulfate exposures. Concrete that will be exposed to sulfate-containing solutions or soils shall comply with the maximum water-cementitious materials ratios, minimum specified compressive strength and be made with the appropriate type of cement in accordance with the provisions of ACI 318, Section 4.3.

1904*A*.4 Corrosion protection of reinforcement. Reinforcement in concrete shall be protected from corrosion and exposure to chlorides in accordance with ACI 318, Section 4.4.

SECTION 1905*A* CONCRETE QUALITY, MIXING AND PLACING

1905*A*.1 General. The required strength and durability of concrete shall be determined by compliance with the proportioning, testing, mixing and placing provisions of Sections 1905*A*.1.1 through 1905*A*.13.

1905*A*.1.1 Strength. Concrete shall be proportioned to provide an average compressive strength as prescribed in Section 1905*A*.3 and shall satisfy the durability criteria of Section 1904*A*. Concrete shall be produced to minimize the frequency of strengths below f'_c as prescribed in Section 1905*A*.6.3. *For concrete designed and constructed in accordance with this chapter, f'_c shall not be less than* *(Relocated from 1905A.1.3, 2001 CBC)* *3,000 psi (20.7MPa) except that 2,500 psi (17.2MPa) concrete may be used in the design of footings for light one-story wood- or steel-framed buildings or other minor structures.* ~~2,500 psi (17.22 MPa).~~ No maximum specified compressive strength shall apply unless restricted by a specific provision of this code or ACI 318. *Reinforced concrete with specified compressive strength higher than 8000 psi may be considered with prior approval of structural design method and acceptance criteria acceptable to the enforcement agency.*

1905*A*.2 Selection of concrete proportions. Concrete proportions shall be determined in accordance with the provisions of ACI 318, Section 5.2.

(Relocated from 1905A.3.3.2, Item #7, 2001 CBC) *A registered civil engineer with experience in concrete mix design shall select the relative amounts of ingredients to be used as basic proportions of the concrete mixes proposed for use under this provision and testing shall be performed in a laboratory acceptable to the enforcement agency.*

1905*A*.3 Proportioning on the basis of field experience and / or trial mixtures. Concrete proportioning determined on the basis of field experience and / or trial mixtures shall be done in accordance with ACI 318, Section 5.3.

1905*A*.4 Proportioning without field experience or trial mixtures. Concrete proportioning determined without field experience or trial mixtures shall be done in accordance with ACI 318, Section 5.4.

1905*A*.5 Average strength reduction. As data become available during construction, it is permissible to reduce the amount by which the average compressive strength (f'_c) is required to exceed the specified value of f'_c in accordance with ACI 318, Section 5.5.

1905*A*.6 Evaluation and acceptance of concrete. The criteria for evaluation and acceptance of concrete shall be as specified in Sections 1905*A*.6.2 through 1905*A*.6.5.

1905*A*.6.1 Qualified technicians. Concrete shall be tested in accordance with the requirements in Sections 1905*A*.6.2 through 1905*A*.6.5. Qualified field testing technicians shall perform tests on fresh concrete at the job site, prepare specimens required for curing under field conditions, prepare specimens required for testing in the laboratory and record the temperature of the fresh concrete when preparing specimens for strength tests. Qualified laboratory technicians shall perform all required laboratory tests.

1905*A*.6.2 Frequency of testing. The frequency of conducting strength tests of concrete and the minimum number of tests shall be as specified in ACI 318, Section 5.6.2 *except as modified in Section 1905A.6.2.1.*

Exception: *(Relocated from 1905A.6.1.3, 2001 CBC) Not permitted by OSHPD and DSA-SS .* ~~When the total volume of a given class of concrete is less than 50 cubic yards (38 m^3), strength tests are not required when evidence of satisfactory strength is submitted to and approved by the building official~~.

1905A.6.2.1 Sample Frequency - Replace ACI 318 Section 5.6.2.1 as follows:

5.6.2.1 *(Relocated from 1905A.6.1.1, 2001 CBC) Samples for strength tests of each class of concrete placed each day shall be taken not less than once a day, or not less than once for each 50 cubic yards (345m^3) of concrete, or not less than once for each 2,000 square feet (186 m^2) of surface area for slabs or walls. Additional samples for seven-day compressive strength tests shall be taken for each class of concrete at the beginning of the concrete work or whenever the mix or aggregate is changed.*

1905*A*.6.3 Strength test specimens. Specimens prepared for acceptance testing of concrete in accordance with Section 1905*A*.6.2 and strength test acceptance criteria shall comply with the provisions of ACI 318, Section 5.6.3.

1905*A*.6.4 Field-cured specimens. Where required by the building official to determine adequacy of curing and protection of concrete in the structure, specimens shall be prepared, cured, tested and test results evaluated for acceptance in accordance with ACI 318, Section 5.6.4.

1905*A*.6.5 Low-strength test results. Where any strength test (see ACI 318, Section 5.6.2.4) falls below the specified value of f'_c, the provisions of ACI 318, Section 5.6.5, shall apply.

1905*A*.7 Preparation of equipment and place of deposit. Prior to concrete being placed, the space to receive the concrete and the equipment used to deposit it shall comply with ACI 318, Section 5.7.

1905*A*.8 Mixing. Mixing of concrete shall be performed in accordance with ACI 318, Section 5.8.

(Relocated from 1905A.8.3, 2001 CBC) The capacity of the mixer shall be such that it will handle one or more full sack batches. No split sack batches will be permitted, except when all materials are weighed.

1905*A*.9 Conveying. The method and equipment for conveying concrete to the place of deposit shall comply with ACI 318, Section 5.9.

1905*A*.10 Depositing. The depositing of concrete shall comply with the provisions of ACI 318, Section 5.10.

1905A.10.1 Consolidation in congested areas.

(Relocated from 1905A.10.10, 2001 CBC) Where conditions make consolidation difficult, or where reinforcement is congested, a mix design with smaller size aggregates, ~~*batches of concrete adjusted to use smaller size aggregates than specified in the mix design*~~ *shall be used as approved by the architect, structural engineer and the enforcement agency.*

1905*A*.11 Curing. The length of time, temperature and moisture conditions for curing of concrete shall be in accordance with ACI 318, Section 5.11.

1905*A*.12 Cold weather requirements. Concrete to be placed during freezing or near-freezing weather shall comply with the requirements of ACI 318, Section 5.12.

(Relocated from 1905A.12.4, 2001 CBC) When mixing concrete during ~~*freezing or near-freezing*~~ *cold weather, the mix shall have a temperature of at least 50°F (10.0°C), but not more than 90°F (32.2°C). The concrete shall be maintained at a temperature of at least 50°F (10.0°C) for not less than 72 hours after placing. When necessary, concrete materials shall be heated before mixing. Special precautions shall be taken for the protection of transit-mixed concrete to maintain a temperature of at least 50°F (10.0°C).*

1905*A*.13 Hot weather requirements. Concrete to be placed during hot weather shall comply with the requirements of ACI 318, Section 5.13.

SECTION 1906*A* - FORMWORK, EMBEDDED PIPES AND CONSTRUCTION JOINTS

1906*A*.1 Formwork. The design, fabrication and erection of forms shall comply with ACI 318, Section 6.1.

1906*A*.2 Removal of forms, shores and reshores. The removal of forms and shores, including from slabs and beams (except where cast on the ground), and the installation of reshores shall comply with ACI 318, Section 6.2.

(Relocated from 1906A.2.1, 2001 CBC) No portion of the forming and shoring system may be removed less than 12 hours after placing. When stripping time is less than the specified curing time, measures shall be taken to provide adequate curing and thermal protection of the stripped concrete.

1906*A*.3 Conduits and pipes embedded in concrete. Conduits, pipes and sleeves of any material not harmful to concrete and within the limitations of ACI 318, Section 6.3, are permitted to be embedded in concrete with approval of the registered design professional.

1906A.3.1 *(Relocated from 1906A.3.13, 2001 CBC)* ***Large Openings.*** *Openings larger than 12 inches (305 mm) in any dimension shall be detailed on the structural plans. Nothing in this section shall be construed to permit work in violation of fire and panic or other safety standards*

1906A.3.2 *(Relocated from 1906A.3.14, 2001 CBC)* ***Adequate Support.*** *Pipes and conduits shall be adequately supported and secured against displacement before concrete is placed.*

1906*A*.4 Construction joints. Construction joints, including their location, shall comply with the provisions of ACI 318, Section 6.4.

(Relocated from 1906A.4.3, 2001 CBC) ~~as determined by the structural engineer and shall conform to the typical details.~~ Typical details and proposed locations of construction joints shall be indicated on the plans.

1906A.4.1 *(Relocated from 1906A.4.7, 2001 CBC)* ***Surface Preparation.*** *The surface of all horizontal construction joints shall be cleaned and roughened by ~~removing the entire surface and~~ exposing clean aggregate solidly embedded in mortar matrix.*

In the event that the contact surface becomes coated with earth, sawdust, etc., after being cleaned, the entire surface so coated shall be recleaned.

SECTION 1907*A* - DETAILS OF REINFORCEMENT

1907*A*.1 Hooks. Standard hooks on reinforcing bars used in concrete construction shall comply with ACI 318, Section 7.1.

1907*A*.2 Minimum bend diameters. Minimum reinforcement bend diameters utilized in concrete construction shall comply with ACI 318, Section 7.2.

1907*A*.3 Bending. The bending of reinforcement shall comply with ACI 318, Section 7.3.

1907*A*.4 Surface conditions of reinforcement. The surface conditions of reinforcement shall comply with the provisions of ACI 318, Section 7.4.

1907*A*.5 Placing reinforcement. The placement of reinforcement, including tolerances on depth and cover, shall comply with the provisions of ACI 318, Section 7.5. Reinforcement shall be accurately placed and adequately supported before concrete is placed.

1907A.5.1 *(Relocated from 1907A.5.5, 2001 CBC)* ***Prestressing tendons.*** *Prestressing tendons shall be placed within plus or minus 1/4-inch (6.4mm) tolerance for member depths equal to and less than 8 inches (203 mm) and not to exceed the lesser of 3/8 inch (9.5 mm) or one third the minimum concrete cover for member depths greater than 8 inches (203 mm).*

1907*A*.6 Spacing limits for reinforcement. The clear distance between reinforcing bars, bundled bars, tendons and ducts shall comply with ACI 318, Section 7.6.

1907*A*.7 Concrete protection for reinforcement. The minimum concrete cover for reinforcement shall comply with Sections 1907*A*.7.1 through 1907*A*.7.7.

1907*A*.7.1 Cast-in-place concrete (nonprestressed). Minimum concrete cover shall be provided for reinforcement in nonprestressed, cast-in-place concrete construction in accordance with ACI 318, Section 7.7.1.

(Relocated from 1907A.7.1, Item #4, 2001 CBC) Concrete tilt-up panels cast against a rigid horizontal surface, such as a concrete slab, exposed to the weather shall have 1" (25 mm) concrete cover for No. 8 or smaller bar and 2" (51 mm) cover for No. 9 or larger bars.

1907*A*.7.2 Cast-in-place concrete (prestressed). The minimum concrete cover for prestressed and nonprestressed reinforcement, ducts and end fittings in cast-in-place prestressed concrete shall comply with ACI 318, Section 7.7.2.

1907*A*.7.3 Precast concrete (manufactured under plant control conditions). The minimum concrete cover for prestressed and nonprestressed reinforcement, ducts and end fittings in precast concrete manufactured under plant control conditions shall comply with ACI 318, Section 7.7.3.

1907*A*.7.4 Bundled bars. The minimum concrete cover for bundled bars shall comply with ACI 318, Section 7.7.4.

1907*A*.7.5 Corrosive environments. In corrosive environments or other severe exposure conditions, prestressed and nonprestressed reinforcement shall be provided with additional protection in accordance with ACI 318, Section 7.7.5.

1907*A*.7.6 Future extensions. Exposed reinforcement, inserts and plates intended for bonding with future extensions shall be protected from corrosion.

1907*A*.7.7 Fire protection. When this code requires a thickness of cover for fire protection greater than the minimum concrete cover specified in Section 1907*A*.7, such greater thickness shall be used.

1907*A*.8 Special reinforcement details for columns. Offset bent longitudinal bars in columns and load transfer in structural steel cores of composite compression members shall comply with the provisions of ACI 318, Section 7.8.

1907*A*.9 Connections. Connections between concrete framing members shall comply with the provisions of ACI 318, Section 7.9.

1907*A*.10 Lateral reinforcement for compression members. Lateral reinforcement for concrete compression members shall comply with the provisions of ACI 318, Section 7.10.

1907*A*.11 Lateral reinforcement for flexural members. Lateral reinforcement for compression reinforcement in concrete flexural members shall comply with the provisions of ACI 318, Section 7.11.

1907*A*.12 Shrinkage and temperature reinforcement. Reinforcement for shrinkage and temperature stresses in concrete members shall comply with the provisions of ACI 318, Section 7.12.

1907*A*.13 Requirements for structural integrity. The detailing of reinforcement and connections between concrete members shall comply with the provisions of ACI 318, Section 7.13, to improve structural integrity.

SECTION 1908*A* - MODIFICATIONS TO ACI 318

1908*A*.1 General. The text of ACI 318 shall be modified as indicated in Sections 1908*A*.1.1 through ~~1908.1.16~~ *1908A.1.47*.

~~**1908.1.1 ACI 318, Section 10.5.** *Modify ACI 318, Section 10.5, by adding new Section 10.5.5 to read as follows:*~~

~~*10.5.5 - In structures assigned to Seismic Design Category B, beams in ordinary moment frames forming part of the seismic-force-resisting system shall have at least two main flexural reinforcing bars continuously top and bottom throughout the beam and continuous through or developed within exterior columns or boundary elements.*~~

1908A.1.1 *(Relocated from 1908A.11.5, 2001 CBC)* ***Replace ACI 318 Section 8.11.5 as follows:***

8.11.5 - Permanent burned clay or concrete tile fillers shall be considered only as forms and shall not be included in the calculations involving shear or bending moments.

The thickness of the concrete slab on the permanent fillers shall be designed as described in ~~Section 1908A.11.6~~ ACI Section 8.11.6 as modified in Section 1908A.1.2.

~~**1908.1.2 ACI 318, Section 11.11.** Modify ACI 318, Section 11.11, by changing its title to read as shown below and by adding new Section 11.11.3 to read as follows:~~

~~*11.11 - Special provisions for columns.*~~

~~*11.11.3 - In structures assigned to Seismic Design Category B, columns of ordinary moment frames having a clear height-to-maximum-plan-dimension ratio of five or less shall be designed for shear in accordance with 21.12.3.*~~

1908A.1.2 *(Relocated from 1908A.11.6, 2001 CBC)* ***Replace ACI 318 Section 8.11.6 as follows:***

8.11.6 - Where removable forms or fillers are used, the thickness of the concrete slab shall not be less than one twelfth of the clear distance between joists and in no case less than 2 1/2 inches (64 mm). Such slab shall be reinforced at right angles to the joists with at least the amount of reinforcement required for flexure, considering load concentrations, if any, but in no case shall the reinforcement be less than that required by ~~Section 1907A.12~~ ACI 318 Section 7.12.

1908A.1.3 *(Relocated from 1908A.11.9, 2001 CBC)* ***Add Section 8.11.9 to ACI 318 as follows:***

8.11.9 Concrete bridging*. Concrete bridging shall be provided as follows: one near the center of spans for 20 to 30 feet (6096 mm to 9144 mm) spans and two near the third points of spans over 30 feet (9144 mm). Such bridging shall be either:*

(a) *A continuous concrete web having a depth equal to the joist and a width not less than 3 1/2 inches (89 mm) reinforced with a minimum of one No. 4 bar in the top and bottom; or*

(b) *Any other concrete element capable of transferring a concentrated load of 1,000 pounds (4.5 kN) from any joist to the two adjacent joists.*

Such bridging shall not be required in roof framing if an individual member is capable of carrying dead load plus a concentrated load of 1,500 pounds (6.7 kN) at any point.

1908A.1.4 *(Relocated from 1910A.5.3, 2001 CBC)* ***Modify ACI 318 Section 10.5.3 by adding the following:***

This ~~alternative~~ section shall not be used for members that resist seismic loads, except that reinforcement provided for foundation elements for one-story wood-frame or one-story light steel buildings need not be more than one-third greater than that required by analysis for all loading conditions.

1908A.1.5 *(Relocated from 1912A.14.3.6, 2001 CBC)* ***Add Section 12.14.3.6 to ACI 318 as follows:***

12.14.3.6 - Welded splices and mechanical connections shall maintain the clearance and coverage requirements of ACI Sections 7.6 and 7.7.

1908A.1.6 Modify ACI 318 Section 13.5.3.3 by adding the following:

Provision of ACI 318 Section 13.5.3.3 shall not be used, unless approved otherwise by enforcement agent.

1908A.1.7 *(Relocated from 1914A.2.6, 2001 CBC)* ***Replace ACI 318 Section 14.2.6 as follows:***

14.2.6 - Walls shall be anchored to intersecting elements such as floors or roofs or to columns, pilasters, buttresses, and intersecting walls and footings with reinforcement at least equivalent to No. 4 bars at 12 inches (305 mm) on center for each layer of reinforcement.

1908A.1.8 *(Relocated from 1914A.3.5, 2001 CBC)* ***Replace ACI 318 Section 14.3.5 as follows:***

14.3.5 - Vertical and horizontal reinforcement shall not be spaced farther apart than three times the wall thickness, nor 18 inches (457 mm). Unless otherwise required by the engineer, the upper- and lowermost horizontal reinforcement shall be placed within one half of the specified spacing at the top and bottom of the wall.

1908A.1.9 *(Relocated from 1914A.3.8, 2001 CBC)* ***Add Section 14.3.8 to ACI 318 as follows:***

14.3.8 - The minimum requirements for horizontal and vertical steel of ACI 318 Sections 14.3.2 and 14.3.3 may be interchanged for precast panels which are not restrained along vertical edges to inhibit temperature expansion or contraction.

1908A.1.10 *(Relocated from 1914A.5, 2001 CBC)* ***ACI 318 Section 14.5 – Empirical design method:*** *Not permitted by OSHPD and DSA-SS.*

1908A.1.11 *(Relocated from 1914A.6.1, 2001 CBC)* ***Replace ACI 318 Section 14.6.1 as follows:***

14.6.1 - Nonbearing walls or nonbearing shear walls shall have a thickness of not less than 4 inches (102 mm) nor a thickness less than 1 / 30 of the shorter unsupported distance between vertical or horizontal stiffening elements.

Where walls are supported laterally by vertical elements, the stiffness of each vertical element shall exceed that of the tributary area of the wall.

1908A.1.12 *(Relocated from 1914A.10, 2001 CBC)* ***Modify ACI 318 by adding Sections 14.9 as follows:***

14.9 ***- Foundation Walls.*** *Horizontal reinforcing of concrete foundation walls for wood-frame or light-steel buildings shall consist of the equivalent of not less than one No. 5 bar located at the top and bottom of the wall. Where such walls exceed 3 feet (914 mm) in height, intermediate horizontal reinforcing shall be provided at spacing not to exceed 2 feet (610 mm) on center. Minimum vertical reinforcing shall consist of No. 3 bars at 24 inches (610 mm) on center.*

Where concrete foundation walls or curbs extend above the floor line and support wood-frame or light-steel exterior, bearing or shear walls, they shall be doweled to the foundation wall below with a minimum of No. 3 bars at 24 inches (610 mm) on center. Where the height of the wall above the floor line exceeds 18 inches (457 mm), the wall above and below the floor line shall meet the requirements of ~~Section 1914A.3. See Section 1633A.2.12 for additional requirements.~~ ACI 318 Section 14.3.

1908A.1.13 *(Relocated from 1915A.2.1, 2001 CBC)* ***Modify ACI 318 Section 15.2.1 by adding the following:***

The appropriate induced reactions for strength design may be computed as those due to a factor of ~~1.5~~ 1.4 times the soil pressures from gravity load combinations and the seismic load combinations of Section ~~1612A.3~~ 1605A.3.

~~**1908.1.14 ACI 318,** Section 22.6. Modify ACI 318, Section 22.6, by adding new Section 22.6.7 to read:~~

~~*22.6.7 - Detailed plain concrete structural walls.*~~

~~*22.6.7.1 - Detailed plain concrete structural walls are walls conforming to the requirements of ordinary structural plain concrete walls and 22.6.7.2.*~~

~~*22.6.7.2 - Reinforcement shall be provided as follows:*~~

~~*(a) Vertical reinforcement of at least 0.20 square inch (129 mm2) in cross-sectional area shall be provided continuously from support to support at each corner, at each side of each opening and at the ends of walls. The continuous vertical bar required beside an opening is permitted to substitute for one of the two No. 5 bars required by 22.6.6.5.*~~

~~*(b) Horizontal reinforcement at least 0.20 square inch (129 mm2) in cross-sectional area shall be provided:*~~

~~*1. Continuously at structurally connected roof and floor levels and at the top of walls;*~~

~~*2. At the bottom of load-bearing walls or in the top of foundations where doweled to the wall; and*~~

~~*3. At a maximum spacing of 120 inches (3048 mm).*~~

~~*Reinforcement at the top and bottom of openings, where used in determining the maximum spacing specified in Item 3 above, shall be continuous in the wall.*~~

1908A.1.14 *(Relocated from 1915A.2.2.2, 2001 CBC)* ***Modify ACI 318 Section 15.2.2 by adding the following:***

External forces and moments are those resulting from the load combinations of Section ~~1612A.3~~ 1605A.3

~~**1908.1.15 - ACI 318, Section 22.10.** - Delete ACI 318, Section 22.10, and replace with the following:~~

~~*22.10 - Plain concrete in structures assigned to Seismic Design Category C, D, E or F.*~~

~~*22.10.1 - Structures assigned to Seismic Design Category C, D, E or F shall not have elements of structural plain concrete, except as follows:*~~

~~*(a) Structural plain concrete basement, foundation or other walls below the base are permitted in detached one- and two-family dwellings three stories or less in height constructed with stud-bearing walls. In dwellings assigned to Seismic Design Category D or E, the height of the wall shall not exceed 8 feet (2438 mm), the thickness shall not be less than 71/2 inches (190 mm), and the wall shall retain no more than 4 feet (1219 mm) of unbalanced fill. Walls shall have reinforcement in accordance with 22.6.6.5.*~~

~~*(b) Isolated footings of plain concrete supporting pedestals or columns are permitted, provided the projection of the footing beyond the face of the supported member does not exceed the footing thickness.*~~

~~*Exception: In detached one- and two-family dwellings three stories or less in height, the projection of the footing beyond the face of the supported member is permitted to exceed the footing thickness.*~~

~~*(c) Plain concrete footings supporting walls are permitted, provided the footings have at least two continuous longitudinal reinforcing bars. Bars shall not be smaller than No. 4 and shall have a total area of not less than 0.002 times the gross cross-sectional area of the footing. For footings that exceed 8 inches (203 mm) in thickness, a minimum of one bar shall be provided at the top and bottom of the footing. Continuity of reinforcement shall be provided at corners and intersections.*~~

~~***Exceptions:***~~

~~*1. In detached one- and two-family dwellings three stories or less in height and constructed with stud-bearing walls, plain concrete footings without longitudinal reinforcement supporting walls are permitted.*~~

~~2. For foundation systems consisting of a plain concrete footing and a plain concrete stemwall, a minimum of one bar shall be provided at the top of the stemwall and at the bottom of the footing.~~

~~3. Where a slab on ground is cast monolithically with the footing, one No. 5 bar is permitted to be located at either the top of the slab or bottom of the footing.~~

1908A.1.15 *(Relocated from 1915A.8.3.2, 2001 CBC)* ***Replace ACI 318 Section 15.8.3.2 as follows:***

15.8.3.2 - Connection between pre-cast walls and supporting members shall meet the requirements of ACI 318 Sections 16.5.1.3(b) & (c) but not less than required by Section ~~1611A~~ 1604A.

EXCEPTION: *In tilt-up construction, this connection may be to an adjacent floor slab. In no case shall the connection provided be less than that required by Section ~~1611A~~ 1604A.*

1908A.1.16 *(Relocated from 1916A.3.3, 2001 CBC)* ***Add Section 16.3.3 to ACI 318 as follows:***

16.3.3 - Nonbearing, nonshear panels such as nonstructural architectural cladding panels or column covers are not required to meet the provisions of Section ~~1916A.11~~ 1908A.1.17.

1908A.1.17 *(Relocated from 1916A.11, 2001 CBC)* ***Add Section 16.11 to ACI 318 as follows:***

16.11 ***- Reinforcement.*** *Perimeters of precast walls shall be reinforced continuously with a minimum of one No. 5 bar extending the full height and width of the wall panel. Bars shall be continuous around corners. Where wall panels do not abut columns or other wall panels, perimeter bars shall be retained by hooked wall bars. Edges of openings in precast walls shall be reinforced with a minimum of one No. 5 bar continuous past corners sufficient to develop the bar.*

A continuous tie or bond beam shall be provided at the roof line either as a part of the roof structure or part of the wall panels as described in the next paragraph below. This tie may be designed as the edge member of the roof diaphragm but, in any case, shall not be less than equivalent to two No. 6 bars continuous. A continuous tie equivalent to two No. 5 bars minimum shall also be provided either in the footing or with an enlarged section of the floor slab.

Wall panels of shear wall buildings shall be connected to columns or to each other in such a manner as to develop at least 75 percent of the horizontal wall steel. Half of this continuous horizontal reinforcing may be concentrated in bond or tie beams at the top and bottom of the walls and at points of intermediate lateral support. If possible, cast in-place joints with reinforcing bars extending from the panels into the joint a sufficient distance to meet the splice requirements of ~~Section 1912A.15~~ ACI 318 Section 12.15 for Class A shall be used. The reinforcing bars or welded tie details shall not be spaced over eight times the wall thickness neither vertically nor fewer than four used in the wall panel height. Where wall panels are designed for their respective overturning forces, the panel connections need not comply with the requirements of this paragraph.

Where splicing of reinforcement must be made at points of maximum stress or at closer spacing than permitted by ~~Section 1907A.6~~ ACI 318 Section 7.6, welding may be used when the entire procedure is suitable for the particular quality of steel used and the ambient conditions. Unless the welds develop 125 percent of the specified yield strength of the steel used, reinforcement in the form of continuous bars or fully anchored dowels shall be added to provide 25 percent excess steel area and the welds shall develop not less than the specified yield strength of the steel.

Where reinforcing bars are used to transfer shear across a joint the shear value for bolts set forth in Table ~~19A-D~~ 1912A.2 may be used.

Wall panels shall be positively connected to all floors and roofs as specified in CBC Sections ~~1605A,1611A and 1633A.2.4.2~~ 1604A, 1607A.13 and ASCE 7 Section 13.5. They shall be connected to the foundations when not anchored to the floor slab or otherwise properly anchored.

See ~~Sections 1910A.10, 1910A.11, 1910A.12 and 1910A.13~~ ACI 318 Sections 10.10, 10.11, 10.12 and 10.13 for design of compression forces in the precast walls.

1908A.1.18 *(Relocated from 1916A.12, 2001 CBC)* ***Add Section 16.12 to ACI 318 as follows:***

16.12 ***- On-site Cast Precast Wall Panels.***

16.12.1 - The provisions of ~~Sections 1916A.1, 1916A.2, 1916A.3, 1916A.4, 1916A.5, 1916A.6 and 1916A.11~~ ACI 318 Sections 16.1, 16.2, 16.3, 16.4, 16.5, 16.6 and 16.11 shall apply to precast wall panels cast on site.

16.12.2 - Precast bearing and nonbearing walls shall be designed in accordance with the provisions of ~~Section 1914A~~ ACI 318 Chapter 14. Panel concrete shall have attained the specified compressive strength (f'_c) before erection unless calculations provided by the structural engineer or architect demonstrate adequate serviceability during handling and erection for concrete panels of lesser strength.

16.12.3 - In lieu of unsupported height limitations, the panel may be supported laterally by vertical elements provided the panel thickness is not less than 1 / 36 the distance between the panel edges and the stiffness of the vertical elements exceeds that of the tributary area of the wall panels. See ~~1633A.2.4.2~~ Section ASCE 7 Section 13.5 for exterior elements.

16.12.4 -All embedded items shall be securely anchored in place prior to placing the concrete.

16.12.5 - Panels shall be allowed as much time as possible in the erect position before making longitudinal connections with an elapsed time of 28 days minimum between casting and connecting the panels.

16.12.6 - All details of reinforcement, connections, bearing seats, inserts, anchors, concrete cover, openings, fabrication and erection tolerances shall be shown on contract drawings.

1908A.1.19 Modify ACI 318 Section 17.5.1 by adding Sections 17.5.1.1 and 17.5.1.2 as follows:

17.5.1.1 - (Relocated from 1917A.5.1.1, 2001 CBC) Full transfer of horizontal shear forces may be assumed when all of the following are satisfied:

1. Contact surfaces are clean, free of laitance, and intentionally roughened to a full amplitude of approximately 1/4 inch (6.4 mm),

2. Minimum ties are provided in accordance with ACI Section 17.6,

3. Web members are designed to resist total vertical shear, and

4. All shear reinforcement is fully anchored into all interconnected elements.

17.5.1.2 - (Relocated from 1917A.5.1.2, 2001 CBC) If all requirements of ACI 318 Section 17.5.1.1 are not satisfied, horizontal shear shall be investigated in accordance with ACI 318 Section 17.5.3 or 17.5.4.

1908A.1.20 *(Relocated from 1918A.2.3.2, 2001 CBC)* ***Modify ACI 318 Section 18.2.3 by adding the following:***

For prestressed concrete members with recessed or dapped ends, an analysis of the connections shall be made in accordance with procedures given in Part 6 of the PCI Design Handbook, ~~5th~~ 6TH Edition.

1908A.1.21 *(Relocated from 1918A.2.4.2, 2001 CBC)* ***Modify ACI 318 Section 18.2.4 by adding the following:***

Where prestressed concrete elements are restrained from movement, an analysis of the stresses in the prestressed elements and loads in the adjoining structural system induced by the above-described effects shall be made in accordance with Part 3 of the PCI Design Handbook, ~~5th~~ 6th Edition.

1908A.1.22 *(Relocated from 1918A.2.7, 2001 CBC)* ***Add Section 18.2.7 to ACI 318 as follows:***

*18.2.7 - **Span to Depth Ratio.** Span to depth ratios for prestressed concrete members shall not exceed the following, except when calculations of deflections prove that greater values may be used without adverse effects:*

Beams ……30
One-way Slabs ……..40
Two-way Floor Slabs…….. 40
Two-way Roof Slabs ……...44
Flat Slabs……See CBC Section ~~1918A.21~~ 1908A.1.28

These ratios should be decreased for special conditions such as heavy loads and simple spans.

Maximum deflection criteria shall be in accordance with Section ~~1909A.5~~ ACI 318 Section 9.5

1908A.1.23 *(Relocated from 1918A.6.4, 2001 CBC)* ***Add Section 18.6.4 to ACI 318 as follows:***

*18.6.4 - **Presumptive Loss of Prestress.** In lieu of an analysis to determine the loss of prestress from the above sources the loss may be assumed to be 35,000 psi (241 MPa) for pretensioned prestressed members. For posttensioned prestressed members the loss due to elastic shortening of concrete, creep of concrete, shrinkage of concrete, and relaxation of steel stress may be assumed to be 25,000 psi (172 MPa).*

1908A.1.24 *(Relocated from 1918A.9.2.2, 2001 CBC)* ***Modify ACI 318 Section 18.9.2.2 by adding the following:***

One-way, unbonded, posttensioned slabs and beams shall be designed to carry the dead load of the slab or beam plus 25 percent of the unreduced superimposed live load by some method other than the primary unbonded posttensioned reinforcement. Design shall be based on the strength method of design with a load factor and capacity reduction factor of one. All reinforcement other than the primary unbonded reinforcement provided to meet other requirements of this section may be used in the design.

1908A.1.25 *(Relocated from 1918A.9.2.3, 2001 CBC)* ***Modify ACI 318 Section 18.9.2 by adding Section 18.9.2.3 as follows:***

18.9.2.3 - Maximum spacing limitations of ~~Sections 1907A.6.1 and 1908A.10.5.2~~ ACI 318 Sections 7.6.1 and 8.10.5.2, for bonded reinforcement in slabs are not applicable to spacing of bonded reinforcement in members with unbonded tendons.

1908A.1.26 *(Relocated from 1918A.12.7, 2001 CBC)* ***Add Section 18.12.7 to ACI 318 as follows:***

*18.12.7 - **Openings in Flat Plates.** The requirements of ~~Section 1913A.4~~ ACI 318 Section 13.4 apply in principle to openings in posttensioned flat plates. Tendons should be continuous and splayed horizontally to get around smaller openings. If tendons are terminated at edges of larger openings, such as at stairwells, an analysis shall be made to ensure sufficient strength and proper behavior. Edges around openings may be reinforced in a manner similar to conventionally reinforced slabs, or, in the case of larger openings, supplementary, posttensioning tendons may be used to strengthen the edges.*

1908A.1.27 *(Relocated from 1918A.19.5, 2001 CBC)* ***Add Section 18.21.5 to ACI 318 as follows:***

*18.21.5 - **Prequalification of anchorages and coupler.** Posttensioned anchorages and couplers for unbonded tendons shall be prequalified for use in prestressed concrete. Data shall be submitted by the posttensioning materials fabricator from an approved independent testing agency to show compliance with the following dynamic test requirements:*

A dynamic test shall be performed on a representative specimen and the tendon shall withstand, without failure, 500,000 cycles from 60 percent to 66 percent of its minimum specified ultimate strength and 50 cycles from 40 percent to 80 percent of its minimum specified ultimate strength. The period of each cycle involves the change from the lower stress level to the upper

stress level and back to the lower. The specimen used for the second dynamic test need not be the same used for the first dynamic test. Systems utilizing multiple strands, wires or bars may be tested utilizing a test tendon of smaller capacity than the full-size tendon. The test tendon shall duplicate the behavior of the full-size tendon and generally shall not have less than 10 percent of the capacity of the full-size tendon.

The above test data must be on file at the enforcement agency for posttensioning systems to be used. General approval will be based on satisfactory performance. Tests shall be required for pre-stressing steel and anchorages.

The average bearing stress, P/A_b, on the concrete created by the anchorage plates shall not exceed the following:

At service load

$f_{cp} = 0.6\, f'_c \sqrt{(A'_b / A_b)}$

but not greater than f'_c

At transfer load

$f_{cp} = 0.8\, f'_{ci} \sqrt{(A'_b / A_b - 02)}$

but not greater than $1.25\, f'_{ci}$ where:

f_{cp} *= permissible compressive concrete stress.*

f'_c *= compressive strength of concrete.*

f'_{ci} *= compressive strength of concrete at time of initial prestress.*

A'_b *= maximum area of the portion of the concrete anchorage surface that is geometrically similar to and concentric with the area of the anchorage.*

A_b *= bearing area of the anchorage.*

P = prestress force in tendon.

1908A.1.28 *(Relocated from 1918A.21, 2001 CBC)* ***Add Section 18.23 to ACI 318 as follows:***

18.23 - ***Prestressed Flat Slab.***

18.23.1 - ***Span depth ratio.*** *The ratio of the span to depth of the slab continuous over at least three supports with cantilevers at the ends shall not be greater than 40 for floor slabs or 44 for roof slabs.*

18.23.2 - ***Distribution of tendons.*** *The use of banded tendons is acceptable. Maximum tendon spacing shall be six times the slab thickness, not to exceed 42 inches (1067 mm). A minimum prestress level of 125 psi (861 kPa) on the local slab section tributary to the tendon or tendon group is required. A minimum of two tendons in flat slabs shall be placed over columns in each direction. Tendons at slab edges shall be placed 6 inches (152 mm) clear of the slab edge. Tendons shall be firmly supported at intervals not exceeding 42 inches (1067 mm) to prevent displacement during concrete placement. Tendons shall not be bundled in groups greater than five monostrand tendons. At horizontal plane deviations grouped tendons at curved portions must be separated with 1-inch-minimum (25 mm) clear between each tendon.*

18.23.3 - ***Slab edge reinforcement.*** *The slab edges, including interior openings with anchorages, shall be reinforced with two No. 5 bars, one top and one bottom, minimum, with a No. 3 hairpin placed each side of each anchorage or tendon carrying an effective prestressing force of 50,000 pounds (223 kN) or less. These hairpins shall be increased to No. 4 hairpins if the effective force per anchorage or tendon is greater than 50,000 pounds (223 kN).*

~~1908.1.3~~ ***1908A.1.29*** **ACI 318, Section 21.1.** Modify existing definitions and add the following definitions to ACI 318, Section 21.1.

DESIGN DISPLACEMENT. Total lateral displacement expected for the design-basis earthquake, *as specified by Section 12.8.6 of ASCE 7.*

DETAILED PLAIN CONCRETE STRUCTURAL WALL. *A wall complying with the requirements of Chapter 22, including 22.6.7.*

ORDINARY PRECAST STRUCTURAL WALL. *A precast wall complying with the requirements of Chapters 1 through 18.*

ORDINARY REINFORCED CONCRETE STRUCTURAL WALL. A *cast-in-place* wall complying with the requirements of Chapters 1 through 18.

ORDINARY STRUCTURAL PLAIN CONCRETE WALL. A wall complying with the requirements of Chapter 22, *excluding 22.6.7.*

WALL PIER. *A wall segment with a horizontal length-to-thickness ratio of at least 2.5, but not exceeding 6, whose clear height is at least two times its horizontal length.*

~~1908A.1.4~~ ***1908A.1.30*** **ACI 318,** Section 21.2.1. Modify ACI 318 Sections 21.2.1.2~~, 1.2.1.3~~ and ~~21.2.1.4~~ *21.2.1.3*, to read as follows:

21.2.1.2 - ~~*For structures assigned to Seismic Design Category A or B,* provisions of Chapters 1 through 18 and 22 shall apply except as modified by the provisions of this chapter. Where the seismic design loads are computed using provisions for intermediate or special concrete systems, the requirements of Chapter 21 for intermediate or special systems, as applicable, shall be satisfied.~~ *(Relocated from 1921A.2.1.2, 2001 CBC)* *The provisions of ACI 318 Chapters 1 through 18 shall apply except as modified by the provisions of ACI 318 Chapter 21 and this Chapter.*

~~*21.2.1.3 - For structures assigned to Seismic Design Category C,* intermediate or special moment frames, intermediate precast structural walls *or ordinary or special reinforced concrete structural walls* shall be used to resist *seismic* forces induced by earthquake motions. Where the design seismic loads are computed using provisions for special concrete systems, the requirements of Chapter 21 for special systems, as applicable, shall be satisfied.~~

~~*21.2.1.4*~~ *21.2.1.3 - For structures assigned to Seismic Design Category D, E or F*, special moment frames, *special reinforced concrete structural walls*, diaphragms and trusses *and foundations* complying with 21.2 through 21.10 *or intermediate precast structural walls complying with* 21.13 shall be used to resist forces induced by earthquake motions. Members not proportioned to resist earthquake forces shall comply with 21.11.

~~1908A.1.5~~ ***1908A.1.31*** **ACI 318, Section 21.2.5.** Modify ACI 318, Section 21.2.5, by renumbering as Section 21.2.5.1 and adding new Section 21.2.5.2 to read as follows:

21.2.5 - Reinforcement in members resisting earthquake-induced forces.

21.2.5.1 - Except as permitted in 21.2.5.2, reinforcement resisting earthquake-induced flexural and axial forces in frame members and in structural wall boundary elements shall comply with ASTM A 706. ASTM 615, Grades 40 and 60 reinforcement, shall be permitted in these members if (a) the actual yield strength based on mill tests does not exceed the specified yield, f_y, strength by more than 18,000 psi (124 MPa) [retests shall not exceed this value by more than an additional 3,000 psi (21 MPa)], and (b) the ratio of the actual tensile strength to the actual yield strength is not less than 1.25.

For computing shear strength, the value of f_{yt} for transverse reinforcement, including spiral reinforcement, shall not exceed 60,000 psi (414 MPa).

21.2.5.2 - Prestressing steel shall be permitted in flexural members of frames, provided the average prestress, f_{pc}, calculated for an area equal to the member's shortest cross-sectional dimension multiplied

by the perpendicular dimension shall be the lesser of 700 psi (4.83 MPa) or $f'_c/6$ at locations of nonlinear action where prestressing steel is used in members of frames.

~~1908.1.6~~ ***1908A.1.32*** **ACI 318, Section 21.2.** Modify ACI 318, Section 21.2, by adding new Section 21.2.9 to read as follows:

21.2.9 - Anchorages for unbonded post-tensioning tendons resisting earthquake induced forces in structures assigned to Seismic Design Category ~~C,~~ D, E or F shall withstand, without failure, 50 cycles of loading ranging between 40 and 85 percent of the specified tensile strength of the prestressing steel.

~~1908.1.7~~ ***1908A.1.33*** **ACI 318, Section 21.3.** Modify ACI 318, Section 21.3, by adding new Section 21.3.2.5 to read as follows:

21.3.2.5 - Unless the special moment frame is qualified for use through structural testing as required by 21.6.3, for flexural members prestressing steel shall not provide more than one-quarter of the strength for either positive or negative moment at the critical section in a plastic hinge location and shall be anchored at or beyond the exterior face of a joint.

(Relocated from 1921A.2.5.5, 2001 CBC) Shear strength provided by prestressing tendons shall not be considered in design.

1908A.1.34 *(Relocated from 1921A.4.4.1 Item #6, 2001 CBC)* ***Modify ACI 318 section 21.4.4.1 as follows:***

Where the calculated point of contraflexure is not within the middle half of the member clear height, provide transverse reinforcement as specified in ACI 318 Sections 21.4.4.1, Items (a) through (c), over the full height of the member.

1908A.1.35 *(Relocated from 1921A.4.4.7, 2001 CBC)* ***Modify ACI 318 by adding Section 21.4.4.7 as follows:***

21.4.4.7- At any section where the design strength, φP_n, of the column is less than the sum of the shears V_e computed in accordance with ACI 318 Sections 21.3.4.1 and 21.4.5.1 for all the beams framing into the column above the level under consideration, transverse reinforcement as specified in ACI 318 Sections 21.4.4.1 through 21.4.4.3 shall be provided. For beams framing into opposite sides of the column, the moment components may be assumed to be of opposite sign. For the determination of the design strength, φP_n, of the column, these moments may be assumed to result from the deformation of the frame in any one principal axis.

1908A.1.36 *(Relocated from 1921A.5.4.5, 2001 CBC)* ***Modify ACI 318 by adding Section 21.5.4.5 as follows:***

21.5.4.5 - Splices shall be based on the development length, ℓ_d, for a straight bar as determined by ~~Sections 1921A.5.4.1 and 1921A.5.4.2~~ ACI 318 Sections 21.5.4.1 and 21.5.4.2 and modified by the factors in ~~Section 1912A~~ ACI 318 Chapter 12.

1908A.1.37 *(Relocated from 1921A.6.6.4, 2001 CBC)* ***Modify ACI 318, Section 21.7.2.2 by adding the following:***

Where boundary members are not required by ~~Section 1921A.6.6.4~~ ACI 318 Section 21.7.6, minimum reinforcement parallel to the edges of all ~~diaphragms~~ structural walls and the boundaries of all openings shall consist of twice the cross-sectional area of the minimum shear reinforcement required per lineal foot of wall. Horizontal extent of boundary element shall be per ACI 318 Section 21.7.6.4 (a) & (b).

1908A.1.38 *(Relocated from 1921A.6.6.3.2, 2001 CBC)* ***Modify ACI 318 by adding Section 21.7.4.6 as follows:***

21.7.4.6 - Walls and portions of walls with $P_u > 0.35P_o$ shall not be considered to contribute to the calculated strength of the structure for resisting earthquake-induced forces. Such walls shall conform to the requirements of ~~Section 1631.2, Item 4~~ ACI 318 Section 21.11.

~~1908.1.8~~ ***1908A.1.39*** **ACI 318, Section 21.7.** Modify ACI 318, Section 21.7, by adding new Section 21.7.10 to read as follows:

21.7.10 - Wall piers and wall segments.

21.7.10.1 - Wall piers not designed as a part of a special moment frame shall have transverse reinforcement designed to satisfy the requirements in 21.7.10.2.

Exceptions:

1. *Wall piers that satisfy 21.11.*
2. *Wall piers along a wall line within a story where other shear wall segments provide lateral support to the wall piers and such segments have a total stiffness of at least six times the sum of the stiffness of all the wall piers.*

21.7.10.2 - Transverse reinforcement with seismic hooks at both ends shall be designed to resist the shear forces determined from 21.4.5.1. Spacing of transverse reinforcement shall not exceed 6 inches (152 mm). Transverse reinforcement shall be extended beyond the pier clear height for at least 12 inches (305 mm).

21.7.10.3 - Wall segments with a horizontal length-to-thickness ratio less than 2.5 shall be designed as columns.

~~1908.1. 9~~ ***1908A.1.40*** **ACI 318, Section 21.8.** Modify Section 21.8.1 to read as follows:

21.8.1 - Special structural walls constructed using precast concrete shall satisfy all the requirements of 21.7 for cast-in-place special structural walls in addition to Section 21.13.2 *through* ~~*21.13.4*~~ *21.13.6.*

1908A.1.41 *(Relocated from 1921A.6.12, Item #3 2001 CBC)* ***Modify ACI 318 section 21.9.4 by adding the following****:*

Collector and boundary elements in topping slabs placed over precast floor and roof elements shall not be less than 3 inches (76 mm) or 6 d_b thick, where d_b is the diameter of the largest reinforcement in the topping slab.

1908A.1.42 *(Relocated from 1921A.6.2.2, 2001 CBC)* ***Modify ACI 318 by adding Section 21.9.5.6 as follows:***

21.9.5.6 - Where boundary members are not required by ~~*Section 1921A.6.2.3*~~ *ACI 318 Section 21.9.5.3, minimum reinforcement parallel to the edges of all diaphragms and the boundaries of all openings shall consist of twice the cross-sectional area of the minimum shear reinforcement required per linear foot of* ~~*wall*~~ *diaphragm.*

~~1908.1.10~~ ***1908A.1. 43*** **ACI 318, Section 21.10.1.1.** Modify ACI 318, Section 21.10.1.1, to read as follows:

21.10.1.1 - Foundations resisting earthquake-induced forces or transferring earthquake-induced forces between a structure and the ground shall comply with the requirements of Section 21.10 and other applicable provisions of ACI 318 *unless modified by Chapter 18A of the* ~~*International*~~ *California Building Code*.

~~1908.1.11~~ ***1908A.1.44*** **ACI 318, Section 21.11.** Modify ACI 318, Section 21.11.2.2 to read as follows:

21.11.2.2 - Members with factored gravity axial forces exceeding ($A_g f'_c/10$) shall satisfy 21.4.3, 21.4.4.1(c), 21.4.4.3 and 21.4.5. The maximum longitudinal spacing of ties shall be s_o for the full column height. Spacing, s_o, shall not exceed the smaller of six diameters of the smallest longitudinal bar enclosed and 6 inches (152 mm). *Lap splices of longitudinal reinforcement in such members need not satisfy 21.4.3.2 in structures where the seismic-force-resisting system does not include special moment frames.*

~~1908.1.12~~ ***1908A.1. 45*** **ACI 318, Section 21.12.5.** Modify ACI 318, Section 21.12.5, by adding new Section 21.12.5.6 to read as follows:

21.12.5.6 - Columns supporting reactions from discontinuous stiff members, such as walls, shall be designed for the special load combinations in Section 1605A.4 of the ~~International~~ California Building Code and shall be provided with transverse reinforcement at the spacing, s_o, as defined in 21.12.5.2 over their full height beneath the level at which the discontinuity occurs. This transverse reinforcement shall be extended above and below the column as required in 21.4.4.5.

~~**1908.1.13**~~ ***1908A.1.46*** **ACI 318, Section 21.13.** Modify ACI 318, Section 21.13, by renumbering Section 21.13.3 to become 21.13.4 and adding new Sections 21.13.3, 21.13.5 and 21.13.6 to read as follows:

21.13.3 - Except for Type 2 mechanical splices, connection elements that are designed to yield shall be capable of maintaining 80 percent of their design strength at the deformation induced by the design displacement.

21.13.4 - Elements of the connection that are not designed to yield shall develop at least $1.5S_y$.

21.13.5 - Wall piers not designed as part of a moment frame shall have transverse reinforcement designed to resist the shear forces determined from 21.12.3. Spacing of transverse reinforcement shall not exceed 8 inches (203 mm). Transverse reinforcement shall be extended beyond the pier clear height for at least 12 inches (305 mm).

Exceptions:

1. *Wall piers that satisfy 21.11.*
2. *Wall piers along a wall line within a story where other shear wall segments provide lateral support to the wall piers and such segments have a total stiffness of at least six times the sum of the stiffnesses of all the wall piers.*

21.13.6 - Wall segments with a horizontal length-to-thickness ratio less than 2.5 shall be designed as columns.

~~**1908.1.16**~~ ***1908A.1.47*** **ACI 318, Section D.3.3.** Modify ACI 318, Sections D.3.3.2 through D.3.3.5, to read as follows:

D.3.3.2 -*In structures assigned to Seismic Design Category ~~C,~~ D, E or F,* post-installed anchors for use under D.2.3 shall have passed the Simulated Seismic Tests of ACI 355.2.

D.3.3.3 -*In structures assigned to Seismic Design Category ~~C,~~ D, E or F,* the design strength of anchors shall be taken as $0.75\varphi N_n$ and $0.75\varphi V_n$, where φ is given in D.4.4 or D.4.5, and N_n and V_n are determined in accordance with D.4.1.

D.3.3.4 -*In structures assigned to Seismic Design Category ~~C,~~ D, E or F,* anchors shall be designed to be governed by tensile or shear strength of a ductile steel element, unless D.3.3.5 is satisfied.

D.3.3.5 - Instead of D.3.3.4, the attachment that the anchor is connecting to the structure shall be designed so that the attachment will undergo ductile yielding at a load level corresponding to anchor forces no greater than the design strength of anchors specified in

D.3.3.3*, or the minimum design strength of the anchors shall be at least 2.5 times the factored forces transmitted by the attachment*.

SECTION 1909A - STRUCTURAL PLAIN CONCRETE

1909A.1 Scope. *(Relocated from 1922A.1, 2001 CBC) Plain concrete shall not be used other than as fill. The minimum specified compression strength of concrete used as fill shall be 1,500 psi (10.3 MPa) at 28 days.* ~~The design and construction of structural plain concrete, both cast-in-place and precast, shall comply with the minimum requirements of Section 1909A and ACI 318, Chapter 22, as modified in Section 1908.~~

~~**1909.1.1 Special structures.** For special structures, such as arches, underground utility structures, gravity walls and shielding walls, the provisions of this section shall govern where applicable.~~

~~**1909.2 Limitations.** The use of structural plain concrete shall be limited to:~~

~~1. Members that are continuously supported by soil, such as walls and footings, or by other structural members capable of providing continuous vertical support.~~

~~2. Members for which arch action provides compression under all conditions of loading.~~

~~3. Walls and pedestals.~~

~~The use of structural plain concrete columns and structural plain concrete footings on piles is not permitted. See Section 1908.1.15 for additional limitations on the use of structural plain concrete.~~

~~**1909.3 Joints.** Contraction or isolation joints shall be provided to divide structural plain concrete members into flexurally discontinuous elements in accordance with ACI 318, Section 22.3.~~

~~**1909.4 Design.** Structural plain concrete walls, footings and pedestals shall be designed for adequate strength in accordance with ACI 318, Sections 22.4 through 22.8.~~

~~**Exception:** For Group R-3 occupancies and buildings of other occupancies less than two stories in height of light-frame construction, the required edge thickness of ACI 318 is permitted to be reduced to 6 inches (152 mm), provided that the footing does not extend more than 4 inches (102 mm) on either side of the supported wall.~~

~~**1909.5 Precast members.** The design, fabrication, transportation and erection of precast, structural plain concrete elements shall be in accordance with ACI 318, Section 22.9.~~

~~**1909.6 Walls.** In addition to the requirements of this section, structural plain concrete walls shall comply with the applicable requirements of ACI 318, Chapter 22.~~

~~**1909.6.1 Basement walls.** The thickness of exterior basement walls and foundation walls shall be not less than 71/2 inches (191 mm). Structural plain concrete exterior basement walls shall be exempt from the requirements for special exposure conditions of Section 1904.2.2.~~

~~**1909.6.2 Other walls.** Except as provided for in Section 1909.6.1, the thickness of bearing walls shall be not less than 1/24 the unsupported height or length, whichever is shorter, but not less than 51/2 inches (140 mm).~~

~~**1909.6.3 Openings in walls.** Not less than two No. 5 bars shall be provided around window and door openings. Such bars shall extend at least 24 inches (610 mm) beyond the corners of openings.~~

SECTION 1910*A* - MINIMUM SLAB PROVISIONS

1910*A*.1 General. The thickness of concrete floor slabs supported directly on the ground shall not be less than $3^1/_2$ inches (89 mm). A 6-mil (0.006 inch; 0.15 mm) polyethylene vapor retarder with joints lapped not less than 6 inches (152 mm) shall be placed between the base course or subgrade and the concrete floor slab, or other approved equivalent methods or materials shall be used to retard vapor transmission through the floor slab.

Exception: A vapor retarder is not required:

1. For detached structures accessory to occupancies in Group R-3, such as garages, utility buildings or other unheated facilities.

2. For unheated storage rooms having an area of less than 70 square feet (6.5 m^2) and carports attached to occupancies in Group R-3.

3. For buildings of other occupancies where migration of moisture through the slab from below will not be detrimental to the intended occupancy of the building.

4. For driveways, walks, patios and other flatwork which will not be enclosed at a later date.

5. Where approved based on local site conditions.

SECTION 1911*A* ANCHORAGE TO CONCRETE— ALLOWABLE STRESS DESIGN

1911*A*.1 Scope. The provisions of this section shall govern the allowable stress design of headed bolts and headed stud anchors cast in normal-weight concrete for purposes of transmitting structural loads from one connected element to the other. These provisions do not apply to anchors installed in hardened concrete or where load combinations include earthquake loads or effects. The bearing area of headed anchors shall be not less than one and one-half times the shank area. Where strength design is used, or where load combinations include earthquake loads or effects, the design strength of anchors shall be determined in accordance with Section 1912*A*. Bolts shall conform to ASTM A 307 or an approved equivalent.

1911*A*.2 Allowable service load. The allowable service load for headed anchors in shear or tension shall be as indicated in Table 1911*A*.2. Where anchors are subject to combined shear and tension, the following relationship shall be satisfied:

$(P_s / P_t)^{5/3} + (V_s / V_t)^{5/3} \leq 1$ **(Equation 19*A*-1)**

where:

P_s = Applied tension service load, pounds (N).

P_t = Allowable tension service load from Table 1911*A*.2, pounds (N).

V_s = Applied shear service load, pounds (N).

V_t = Allowable shear service load from Table 1911*A*.2, pounds (N).

TABLE 1911*A*.2 - ALLOWABLE SERVICE LOAD ON EMBEDDED BOLTS (pounds)

BOLT DIAMETER (inches)	MINIMUM EMBEDMENT (inches)	EDGE DISTANCE (inches)	SPACING (inches)	MINIMUM CONCRETE STRENGTH (psi)					
				f'_c= 2,500		f'_c= 3,000		f'_c= 4,000	
				Tension	Shear	Tension	Shear	Tension	Shear
$^1/_4$	$2^1/_2$	$1^1/_2$	3	200	500	200	500	200	500
$^3/_8$	3	$2^1/_4$	$4^1/_2$	500	1,100	500	1,100	500	1,100
$^1/_2$	4	3	6	950	1,250	950	1,250	950	1,250
	4	5	5	1,450	1,600	1,500	1,650	1,550	1,750
$^5/_8$	$4^1/_2$	$3^3/_4$	$7^1/_2$	1,500	2,750	1,500	2,750	1,500	2,750
	$4^1/_2$	$6^1/_4$	$7^1/_2$	2,125	2,950	2,200	3,000	2,400	3,050
$^3/_4$	5	$4^1/_2$	9	2,250	3,250	2,250	3,560	2,250	3,560
	5	$7^1/_2$	9	2,825	4,275	2,950	4,300	3,200	4,400
$^7/_8$	6	$5^1/_4$	$10^1/_2$	2,550	3,700	2,550	4,050	2,550	4,050
1	7	6	12	3,050	4,125	3,250	4,500	3,650	5,300
$1^1/_8$	8	$6^3/_4$	$13^1/_2$	3,400	4,750	3,400	4,750	3,400	4,750
$1^1/_4$	9	$7^1/_2$	15	4,000	5,800	4,000	5,800	4,000	5,800

For SI: 1 inch = 25.4 mm, 1 pound per square inch = 0.00689 MPa, 1 pound = 4.45 N.

1911*A*.3 Required edge distance and spacing. The allowable service loads in tension and shear specified in Table 1911*A*.2 are for the edge distance and spacing specified. The edge distance and spacing are permitted to be reduced to 50 percent of the values specified with an equal reduction in allowable service load. Where edge distance and spacing are reduced less than 50 percent, the allowable service load shall be determined by linear interpolation.

1911*A*.4 Increase in allowable load. Increase of the values in Table 1911*A*.2 by one-third is permitted where the provisions of Section 1605*A*.3.2 permit an increase in allowable stress for wind loading.

1911*A*.5 Increase for special inspection. Where special inspection is provided for the installation of anchors, a 100-percent increase in the allowable tension values of Table 1911*A*.2 is permitted. No increase in shear value is permitted.

SECTION 1912*A* - ANCHORAGE TO CONCRETE— STRENGTH DESIGN

1912*A*.1 Scope. The provisions of this section shall govern the strength design of anchors installed in concrete for purposes of transmitting structural loads from one connected element to the other. Headed bolts, headed studs and hooked (J- or L-) bolts cast in concrete and expansion anchors and undercut anchors installed in hardened concrete shall be designed in accordance with Appendix D of ACI 318 as modified by Section ~~1908.1.16~~ *1908A.1.47*, provided they are within the scope of Appendix D.

> **Exception:** Where the basic concrete breakout strength in tension of a single anchor, N_b, is determined in accordance with Equation (D-7), the concrete breakout strength requirements of Section D.4.2.2 shall be considered satisfied by the design procedures of Sections D.5.2 and D.6.2 for anchors exceeding 2 inches (51 mm) in diameter or 25 inches (635 mm) tensile embedment depth.

The strength design of anchors that are not within the scope of Appendix D of ACI 318, and as amended above, shall be in accordance with an approved procedure.

SECTION 1913*A* - SHOTCRETE

1913*A*.1 General. *(Relocated from 1924A.1, 2001 CBC)* Shotcrete is mortar or concrete that is pneumatically projected at high velocity onto a surface. ~~*Included are such terms commonly known as gunite and guncrete.*~~ Except as specified in this section, shotcrete shall conform to the requirements of this chapter for ~~plain or~~ reinforced concrete~~.~~ *and the provisions of ACI 506.* ~~*Working stresses for the design of reinforced shotcrete shall be based on the specified compressive strength of the shotcrete to be used in the structure.*~~ *The specified compressive strength of shotcrete shall not be less than 3,000 psi (20.69 MPa).*

Concrete or masonry to receive shotcrete shall have the entire surface thoroughly cleaned and roughened by sand blasting, and just prior to receiving shotcrete, shall be thoroughly cleaned of all debris, dirt and dust. Concrete and masonry shall be wetted before shotcrete is deposited, but not so wet as to overcome suction. Sand for sand blasting shall be clean, sharp and uniform in size, with no particles that will pass a 50-mesh screen.

1913*A*.2 Proportions and materials. Shotcrete proportions shall be selected that allow suitable placement procedures using the delivery equipment selected and shall result in finished in-place hardened shotcrete meeting the strength requirements of this code.

1913*A*.3 Aggregate. Coarse aggregate, if used, shall not exceed $^3/_4$ inch (19.1 mm).

1913*A*.4 Reinforcement. Reinforcement used in shotcrete construction shall comply with the provisions of Sections 1913*A*.4.1 through 1913*A*.4.4.

> **1913*A*.4.1 Size.** The maximum size of reinforcement shall be No. 5 bars unless it is demonstrated by preconstruction tests that adequate encasement of larger bars will be achieved.
>
> **1913*A*.4.2 Clearance.** When No. 5 or smaller bars are used, there shall be a minimum clearance between parallel reinforcement bars of $2^1/_2$ inches (64 mm). When bars larger than No. 5 are permitted, there shall be a minimum clearance between parallel bars equal to six diameters of the bars used. When two curtains of steel are provided, the curtain nearer the nozzle shall have a minimum spacing equal to 12 bar diameters and the remaining curtain shall have a minimum spacing of six bar diameters.
>
> > **Exception:** Subject to the approval of the building official, required clearances shall be reduced where it is demonstrated by preconstruction tests that adequate encasement of the bars used in the design will be achieved.
>
> **1913*A*.4.3 Splices.** Lap splices of reinforcing bars shall utilize the noncontact lap splice method with a minimum clearance of 2 inches (51 mm) between bars. The use of contact lap splices necessary for support of the reinforcing is permitted when approved by the building official, based on satisfactory preconstruction tests that show that adequate encasement of the bars will be achieved, and provided that the splice is oriented so that a plane through the center of the spliced bars is perpendicular to the surface of the shotcrete.

1913A.4.4 Spirally tied columns. Shotcrete shall not be applied to spirally tied columns.

1913A.5 Preconstruction tests. When required by the building official, a test panel shall be shot, cured, cored or sawn, examined and tested prior to commencement of the project. The sample panel shall be representative of the project and simulate job conditions as closely as possible. The panel thickness and reinforcing shall reproduce the thickest and most congested area specified in the structural design. It shall be shot at the same angle, using the same nozzleman and with the same concrete mix design that will be used on the project. The equipment used in preconstruction testing shall be the same equipment used in the work requiring such testing, unless substitute equipment is approved by the building official.

1913A.6 Rebound. Any rebound or accumulated loose aggregate shall be removed from the surfaces to be covered prior to placing the initial or any succeeding layers of shotcrete. Rebound shall not be used as aggregate.

1913A.7 Joints. Except where permitted herein, unfinished work shall not be allowed to stand for more than 30 minutes unless edges are sloped to a thin edge. For structural elements that will be under compression and for construction joints shown on the approved construction documents, square joints are permitted. Before placing additional material adjacent to previously applied work, sloping and square edges shall be cleaned and wetted.

(Relocated from 1924A.7, 2001 CBC) The film of laitance which forms on the surface of the shotcrete shall be removed within approximately two hours after application by brushing with a stiff broom. If this film is not removed within two hours, it shall be removed by thorough wire brushing or sand blasting. Construction joints over eight hours old shall be thoroughly cleaned with air and water prior to receiving shotcrete.

1913A.8 Damage. In-place shotcrete that exhibits sags, sloughs, segregation, honeycombing, sand pockets or other obvious defects shall be removed and replaced. Shotcrete above sags and sloughs shall be removed and replaced while still plastic.

1913A.9 Curing. During the curing periods specified herein, shotcrete shall be maintained above 40°F (4°C) and in moist condition.

1913A.9.1 Initial curing. Shotcrete shall be kept continuously moist for 24 hours after shotcreting is complete or shall be sealed with an approved curing compound.

1913A.9.2 Final curing. Final curing shall continue for seven days after shotcreting, or for three days if high-early-strength cement is used, or until the specified strength is obtained. Final curing shall consist of the initial curing process or the shotcrete shall be covered with an approved moisture-retaining cover.

1913A.9.3 Natural curing. Natural curing shall not be used in lieu of that specified in this section unless the relative humidity remains at or above 85 percent, and is authorized by the registered design professional and approved by the building official.

1913A.10 Strength tests. Strength tests for shotcrete shall be made *(Relocated from 1924A.10, 2001 CBC)* *in accordance with ASTM standards* by an approved agency on specimens that are representative of the work and which have been water soaked for at least 24 hours prior to testing. When the maximum-size aggregate is larger than $^3/_8$ inch (9.5 mm), specimens shall consist of not less than three 3-inch-diameter (76 mm) cores or 3-inch (76 mm) cubes. When the maximum-size aggregate is $^3/_8$ inch (9.5 mm) or smaller, specimens shall consist of not less than 2-inch-diameter (51 mm) cores or 2-inch (51 mm) cubes.

1913A.10.1 Sampling. Specimens shall be taken from the in-place work or from test panels, and shall be taken at least once each shift, but not less than one for each 50 cubic yards (38.2 m^3) of shotcrete.

1913A.10.2 Panel criteria. When the maximum-size aggregate is larger than $^3/_8$ inch (9.5 mm), the test panels shall have minimum dimensions of 18 inches by 18 inches (457 mm by 457 mm). When the maximum size aggregate is $^3/_8$ inch (9.5 mm) or smaller, the test panels shall have minimum dimensions of 12 inches by 12 inches (305 mm by 305 mm). Panels shall be shot in the same position as the work, during the course of the work and by the nozzlemen doing the work. The conditions under which the panels are cured shall be the same as the work. *(Relocated from 1924A.10, 2001 CBC) Approval from the enforcement agency must be obtained prior to performing the test panel method.*

1913A.10.3 Acceptance criteria. The average compressive strength of three cores from the in-place work or a single test panel shall equal or exceed $0.85f'_c$ with no single core less than $0.75f'_c$. The average compressive strength of three cubes taken from the in-place work or a single test panel shall equal or exceed f'_c with no

individual cube less than $0.88 f'_c$. To check accuracy, locations represented by erratic core or cube strengths shall be retested.

1913A.11 *(Relocated from 1924A.12, 2001 CBC)* ***Equipment.*** *The equipment used in preconstruction testing shall be the same equipment used in the work requiring such testing, unless substitute equipment is approved by the enforcement agency.*

1913A.12 *(Relocated from 1924A.13, 2001 CBC)* ***Forms and Ground Wires for Shotcrete.*** *Forms for shotcrete shall be substantial and rigid. Forms shall be built and placed so as to permit the escape of air and rebound.*

Adequate ground wires, which are to be used as screeds, shall be placed to establish the thickness, surface planes and form of the shotcrete work. All surfaces shall be rodded to these wires.

1913A.13 *(Relocated from 1924A.14, 2001 CBC)* ***Placing.*** *Shotcrete shall be placed in accordance with ACI 506.*

SECTION 1914*A* - REINFORCED GYPSUM CONCRETE

1914*A*.1 General. Reinforced gypsum concrete shall comply with the requirements of ASTM C 317 and ASTM C 956. *Reinforced gypsum concrete shall be considered as an alternative system.*

1914*A*.2 Minimum thickness. The minimum thickness of reinforced gypsum concrete shall be 2 inches (51 mm) except the minimum required thickness shall be reduced to $1^1/_2$ inches (38 mm), provided the following conditions are satisfied:

1. The overall thickness, including the formboard, is not less than 2 inches (51 mm).

2. The clear span of the gypsum concrete between supports does not exceed 33 inches (838 mm).

3. Diaphragm action is not required.

4. The design live load does not exceed 40 pounds per square foot (psf) (1915 Pa).

SECTION 1915*A* - CONCRETE-FILLED PIPE COLUMNS

1915*A*.1 General. Concrete-filled pipe columns shall be manufactured from standard, extra-strong or double-extra-strong steel pipe or tubing that is filled with concrete so placed and manipulated as to secure maximum density and to ensure complete filling of the pipe without voids.

1915*A*.2 Design. The safe supporting capacity of concrete-filled pipe columns shall be computed in accordance with the approved rules or as determined by a test.

1915*A*.3 Connections. Caps, base plates and connections shall be of approved types and shall be positively attached to the shell and anchored to the concrete core. Welding of brackets without mechanical anchorage shall be prohibited. Where the pipe is slotted to accommodate webs of brackets or other connections, the integrity of the shell shall be restored by welding to ensure hooping action of the composite section.

1915*A*.4 Reinforcement. To increase the safe load-supporting capacity of concrete-filled pipe columns, the steel reinforcement shall be in the form of rods, structural shapes or pipe embedded in the concrete core with sufficient clearance to ensure the composite action of the section, but not nearer than 1 inch (25 mm) to the exterior steel shell. Structural shapes used as reinforcement shall be milled to ensure bearing on cap and base plates.

1915*A*.5 Fire-resistance-rating protection. Pipe columns shall be of such size or so protected as to develop the required fire-resistance ratings specified in Table 601. Where an outer steel shell is used to enclose the fire-resistant covering, the shell shall not be included in the calculations for strength of the column section. The minimum diameter of pipe columns shall be 4 inches (102 mm) except that in structures of Type V construction not exceeding three stories or 40 feet (12 192 mm) in height, pipe columns used in the basement and as secondary steel members shall have a minimum diameter of 3 inches (76 mm).

1915*A*.6 Approvals. Details of column connections and splices shall be shop fabricated by approved methods and shall be approved only after tests in accordance with the approved rules. Shop-fabricated concrete-filled pipe columns shall be inspected by the building official or by an approved representative of the manufacturer at the plant.

SECTION 1916A - CONCRETE TESTING

1916A.1 *(Relocated from 1929A.1, 2001 CBC)* ***Cementitious Material*** *~~Test~~. The concrete supplier shall furnish to the enforcement agency certification ~~from the cement manufacturer~~ that the cement proposed for use on the project has been manufactured and tested in compliance with the requirements of ASTM C 150 for portland cement and ASTM C 595 or ASTM C 1157 for blended hydraulic cement, whichever is applicable. When a mineral admixture or ground granulated blast-furnace slag is proposed for use, the concrete supplier shall furnish to the enforcement agency certification ~~from the manufacturer~~ that they have been manufactured and tested in compliance with ASTM C 618 or ASTM C 989, whichever is applicable. ~~An affidavit shall be provided by the concrete supplier which identifies the cementitious material used for the project by the manufacturer.s lot number, date of shipment from the manufacturer, date of receipt of cementitious material by the concrete supplier, place of storage and date of use of the cementitious material. If such information is not available, one grab sample of cementitious material used on the project shall be taken for each day.s pour and shall be tested as directed by the structural engineer, architect or enforcement agency. See Section 1929A.6 for waiver of tests.~~ The concrete producer shall provide copies of the cementitious material supplier's Certificate of Compliance that represents the materials used by date of shipment for concrete. Cementitious materials without Certification of Compliance shall not be used.*

1916A.2 *(Relocated from 1929A.2, 2001 CBC)* ***Tests of Reinforcing Bars****. Where samples are taken from bundles as delivered from the mill, with the bundles identified as to heat number and provided the mill analyses accompany the report, one tensile test and one bend test shall be made from a specimen from each 10 tons (9080 kg) or fraction thereof of each size of reinforcing steel.*

Where positive identification of the heat number cannot be made or where random samples are to be taken, one series of tests shall be made from each 2 1/2 tons (2270 kg) or fraction thereof of each size of reinforcing steel. See Section ~~1929A.6~~ 1916A.4 for waiver of tests.

1916A.3 *(Relocated from 1929A.3, 2001 CBC)* ***Tests for Prestressing Steel and Anchorage****. All wires or bars of each size from each mill heat and all strands from each manufactured reel to be shipped to the site shall be assigned an individual lot number and shall be tagged in such a manner that each lot can be accurately identified at the jobsite. Each lot of tendon and anchorage assemblies and bar couplers to be installed shall be likewise identified.*

The following samples of materials and tendons selected by the engineer or the designated testing laboratory from the prestressing steel at the plant or jobsite shall be furnished by the contractor and tested by an approved independent testing agency:

1. *For wire, strand or bars, 7-foot-long (2134 mm) samples shall be taken of the coil of wire or strand reel or rods. A minimum of one random sample per 5,000 pounds (2270 kg) of each heat or lot used on the job shall be selected.*

2. *For prefabricated prestressing tendons other than bars, one completely fabricated tendon 10 feet (3048 mm) in length between grips with anchorage assembly at one end shall be furnished for each size and type of tendon and anchorage assembly.*

   Variations of the bearing plate size need not be considered.

   The anchorages of unbonded tendons shall develop at least 95 percent of the minimum specified ultimate strength of the pre-stressing steel. The total elongation of the tendon under ultimate load shall not be less than 2 percent measured in a minimum gage length of 10 feet (3048 mm).

   Anchorages of bonded tendons shall develop at least 90 percent of the minimum specified strength of the prestressing steel tested in an unbonded state. All couplings shall develop at least 95 percent of the minimum specified strength of the prestressing steel and shall not reduce the elongation at rupture below the requirements of the tendon itself.

3. *If the prestressing tendon is a bar, one 7-foot (2134 mm) length complete with one end anchorage shall be furnished and, in addition, if couplers are to be used with the bar, two 4-foot (1219 mm) lengths of bar fabricated to fit and equipped with one coupler shall be furnished.*

4. *Mill tests of materials used for end anchorages shall be furnished. In addition, at least one Brinnell hardness test shall be made of each thickness of bearing plate.*

1916A.4 *(Relocated from 1929A.6, 2001 CBC)* ***Waiver of Material Testing.*** *Tests of cement and reinforcing bars may be waived by the architect or structural engineer with the approval of the enforcement agency for one-story buildings where the specified compressive strength of the concrete f'_c, delivered to the jobsite is 3,500 psi (24.13 MPa) and where the f'_c used in design is 2,500 psi (17.24 MPa).*

1916A.5 *(Relocated from 1929A.8, 2001 CBC)* ***Composite Construction Cores****. Cores of the completed composite concrete construction shall be taken to demonstrate the shear strength along the contact surfaces. The cores shall be tested when the cast-in-place concrete is approximately 28 days old and shall be tested by a shear loading parallel to the joint between the precast concrete and the cast-in-place concrete. The minimum unit shear strength of the contact surface area of the core shall not be less than 100 psi (689 kPa).*

At least one core shall be taken from each building for each 5,000 square feet (465m2) of area of composite concrete construction and not less than three cores shall be taken from each project. The architect or structural engineer in responsible charge of the project or his or her representative shall designate the location for sampling.

1916A.6 *(Relocated from 1929A.11, 2001 CBC)* ***Tests of Shotcrete.*** *Testing of shotcrete shall follow the provisions of Section ~~1924A.10~~ 1913A and the general requirements of ~~Section 1905A.6~~ ACI 318 Section 5.6.*

1916.7 *(Relocated from 1929A.13, 2001 CBC)* ***Gypsum Field Tests.*** *Field tests shall be made during construction to verify gypsum strength ~~specified in Table 19A-E~~. One sample consisting of three specimens shall be made for each 5,000 square feet (465 m2) or fraction thereof of all gypsum poured, but not less than one sample shall be taken from each half day's pour.*

1916A.8 *(Relocated from 1923A.3.5, 2001 CBC)* ***Post Installed Anchors in Concrete Tests.*** *When drilled-in expansion-type anchors or other post installed anchors acceptable to enforcement agency are used in lieu of cast-in place bolts, the allowable shear and tension values and installation verification test loads shall be acceptable to the enforcement agency.*

When expansion-type anchors are listed for sill plate bolting applications, 10 percent of the anchors shall be tension tested.

When expansion-type anchors are used for other structural applications, all such expansion anchors shall be tension tested. Expansion-type anchors shall not be used as hold down bolts.

When expansion-type anchors are used for nonstructural applications such as equipment anchorage, 50 percent or alternate bolts in a group, including at least one-half the anchors in each group, shall be tension tested.

The tension testing of the expansion anchors shall be done in the presence of the special inspector and a report of the test results shall be submitted to the enforcement agency. If any anchors fail the tension-testing requirements, the additional testing requirements shall be acceptable to the enforcement agency. The above requirements shall also apply to other post installed anchors acceptable to enforcement agency and bolts or anchors set in concrete with chemical if the long-term durability and stability of the chemical material and its resistance to loss of strength and chemical change at elevated temperatures are established to the satisfaction of the enforcement agency.

(Relocated from 1930A, 2001 CBC) ***SECTION 1917A - EXISTING CONCRETE STRUCTURES***

1917A.1. EXISTING CONCRETE STRUCTURES.

The structural use of existing concrete with a core strength less than 1,500 psi (10.3MPa) is not permitted in rehabilitation work. ~~Such concrete may be strengthened as required for masonry in Section 2114A.~~

For existing concrete structures, sufficient cores shall be taken at representative locations throughout the structure, as designated by the architect or structural engineer, so that knowledge will be had of the in-place strength of the concrete. At least three cores shall be taken from each building for each 4,000 square feet (372 m2) of floor area, or fraction thereof. Cores shall be at least 4 inches (102 mm) in diameter. Cores as small as 2.75 inches (70 mm) in diameter may be allowed by the enforcement agency when reinforcement is closely spaced and the coarse aggregate does not exceed 3/4 inch (19 mm).

Notation [For DSA-SS]:
Authority: Education Code Sections 17310, 81142; Health & Safety Code Section 16022
Reference(s): Education Code Sections 17280 - 17317, and 811130 - 81149; Health & Safety Code Sections 16000 – 16023

Notation [For OSHPD]:
Authority: Health and Safety Code Section 129850
Reference: Health and Safety Code Sections 1275, 129850 and 129790

Chapter 20 – Aluminum

2001 CBC	PROPOSED ADOPTION	OSHPD				DSA-SS	Comments
		1	2	3	4		
	Adopt entire chapter without amendments		X	X			
	Adopt entire chapter with amendments listed below	X			X	X	
	Adopt only those sections listed below						
2004A.8 CA	*2003.1 CA*	X			X	X	Relocated existing California Building Standards into IBC format

REPEAL OF EXISTING CALIFORNIA AMENDMENTS IN PART OR IN WHOLE THAT ARE NO LONGER NECESSARY AS FOLLOWS:

2001 CBC DIVISION I – GENERAL

2001 CBC SECTION 2001A.2 – ALLOYS: Repeal amendment in the following subsection.

~~*2001A.2*~~.

Notation [For DSA-SS]:
Authority: Education Code Sections 17310, 81142; Health & Safety Code Section 16022
Reference(s): Education Code Sections 17280 - 17317, and 811130 - 81149; Health & Safety Code Sections 16000 – 16023

Notation [For OSHPD]:
Authority: Health and Safety Code Section 129850
Reference: Health and Safety Code Sections 1275,129850 and 129790

EXPRESS TERMS

SECTION 2001 - GENERAL

2001.1 Scope. This chapter shall govern the quality, design, fabrication and erection of aluminum.

SECTION 2002 - MATERIALS

2002.1 General. Aluminum used for structural purposes in buildings and structures shall comply with AA ASM 35 and AA ADM 1. The nominal loads shall be the minimum design loads required by Chapter 16.

[For OSHPD 1 & 4 and DSA-SS] SECTION 2003 - INSPECTION

2003.1 Inspection ~~of Welding~~. *Inspection of ~~welding~~ Aluminum shall be required in accordance with the requirements for steel in Chapter 17A.*

Notation [For DSA-SS]:
Authority: Education Code Sections 17310, 81142; Health & Safety Code Section 16022
Reference(s): Education Code Sections 17280 - 17317, and 811130 - 81149; Health & Safety Code Sections 16000 – 16023

Notation [For OSHPD]:

Authority: Health and Safety Code Section 129850
Reference: Health and Safety Code Sections 1275,129850 and 129790

CHAPTER 21 - MASONRY

2001 CBC	PROPOSED ADOPTION	OSHPD		Comments
		2	3	
	Adopt entire chapter without amendments	X	X	
	Adopt entire chapter with amendments listed below			
	Adopt only those sections listed below			

EXPRESS TERMS

SECTION 2101 GENERAL

2101.1 Scope. This chapter shall govern the materials, design, construction and quality of masonry.

SECTION 2107 ALLOWABLE STRESS DESIGN
2107.1 General. The design of masonry structures using allowable stress design shall comply with Section 2106 and the requirements of Chapters 1 and 2 of ACI 530/ASCE 5/TMS 402 except as modified by Sections 2107.2 through 2107.8.

……

2107.4 ACI 530/ASCE 5/TMS 402, Section 2.1.6, columns. Add the following text to Section 2.1.6:
2.1.6.6 Light-frame construction. Masonry columns used only to support light-frame roofs of carports, porches, sheds or similar structures with a maximum area of 450 square feet (41.8 m^2) assigned to Seismic Design Category A, B or C are permitted to be designed and constructed as follows:

1. Concrete masonry materials shall be in accordance with Section 2103.1 of the *California ~~International~~ Building Code*. Clay or shale masonry units shall be in accordance with Section 2103.2 of the *California ~~International~~ Building Code*.
2. The nominal cross-sectional dimension of columns shall not be less than 8 inches (203 mm).
3. Columns shall be reinforced with not less than one No. 4 bar centered in each cell of the column.
4. Columns shall be grouted solid.
5. Columns shall not exceed 12 feet (3658 mm) in height.
6. Roofs shall be anchored to the columns. Such anchorage shall be capable of resisting the design loads specified in Chapter 16 of the *California ~~International~~ Building Code*.
7. Where such columns are required to resist uplift loads, the columns shall be anchored to their footings with two No. 4 bars extending a minimum of 24 inches (610 mm) into the columns and bent horizontally a minimum of 15 inches (381 mm) in opposite directions into the footings. One of these bars is permitted to be the reinforcing bar specified in Item 3 above. The total weight of a column and its footing shall not be less than 1.5 times the design uplift load.

Notation [For OSHPD]:
Authority: Health and Safety Code Section 129850
Reference: Health and Safety Code Sections 1275 and 129850

SECTION 2113 MASONRY CHIMNEYS

2113.1 Definition. A masonry chimney is a chimney constructed of concrete or masonry, hereinafter referred to as "masonry." Masonry chimneys shall be constructed, anchored, supported and reinforced as required in this chapter.

…….

2113.11 Flue lining (material). Masonry chimneys shall be lined. The lining material shall be appropriate for the type of appliance connected, according to the terms of the appliance listing and the manufacturer's instructions.

…….

2113.11.1.2 Gas appliances. Flue lining systems for gas appliances shall be in accordance with the *California* ~~*International*~~ Plumbing *Code*.

2113.15 Flue area (appliance). Chimney flues shall not be smaller in area than the area of the connector from the appliance. Chimney flues connected to more than one appliance shall not be less than the area of the largest connector plus 50 percent of the areas of additional chimney connectors.

Exceptions:

1. Chimney flues serving oil-fired appliances sized in accordance with NFPA 31.
2. Chimney flues serving gas-fired appliances sized in accordance with the *California* ~~*International*~~ *Plumbing Code*.

Notation [For OSHPD]:
Authority: Health and Safety Code Section 129850
Reference: Health and Safety Code Sections 1275 and 129850

Chapter 21*A* – Masonry

2001 CBC	PROPOSED ADOPTION	OSHPD		DSA-SS	Comments
		1	4		
	Adopt entire chapter without amendments				
	Adopt entire chapter with amendments listed below	X	X	X	
	Adopt only those sections listed below				
	2101A.1.1	X	X	X	
	2101A.1.2	X	X	X	
	2101A.2.2	X	X	X	
	2101A.2.3	X	X	X	
2109A	*2101A.2.4*	X	X	X	Relocated existing California Building Standards into IBC format
2110A.1	*2101A.2.5*	X	X	X	Relocated existing California Building Standards into IBC format
2101A.3	*2102A.1*	X	X	X	Relocated existing California Building Standards into IBC format
	2103A.3	X	X	X	
2103.3.1	*2103A.8*	X	X	X	Relocated existing California Building Standards into IBC format
	2103A.11	X	X	X	
2103A.4.2	*2103A.12.1 CA*	X	X	X	Relocated existing California Building Standards into IBC format
2103A.4.2	*2103A.12.2 CA*	X	X	X	Relocated existing California Building Standards into IBC format
2103A.4.3 CA	*2103A.12.3 CA*	X	X	X	Relocated existing California Building Standards into IBC format
	2103A.13.6	X	X	X	
	2103A.13.7	X	X	X	
2103A.14	*2103A.14 CA*	X	X	X	Relocated existing California Building Standards into IBC format
	2104A.1.2	X	X	X	
2110.A.2	*2104A.1.2.5*	X	X	X	Relocated existing California Building Standards into IBC format

	2104A.1.2.6	X	X	X	
	2104A.1.2.7	X	X	X	
2104A.4.5 Ca	*2104A.2*	X	X	X	Relocated existing California Building Standards into IBC format
	2104A.3.2.2	X	X	X	
	2104A.3.3.2	X	X	X	
	2104A.4.2.1	X	X	X	
2104A.6 CA	*2104A.6 CA*	X	X	X	Relocated existing California Building Standards into IBC format
2104A.7	*2104A.7 CA*	X	X	X	Relocated existing California Building Standards into IBC format
	2105A.2	X	X	X	
2105A.3.0 CA	*2105A.2.1*	X	X	X	Relocated existing California Building Standards into IBC format
	2105.2.2	X	X	X	
	2105A.2.2.1.3	X	X	X	
	2105A.2.2.2.1	X	X	X	
2105A.3.2	*2105A.2.2.2.2*	X	X	X	Relocated existing California Building Standards into IBC format
2105A.3.3	*2105A.2.2.3 CA*	X	X	X	Relocated existing California Building Standards into IBC format
	2105A.3	X	X	X	
2105A.3.1	*2105A.4 CA*	X	X	X	Relocated existing California Building Standards into IBC format
2105A.3.4	*2105A.5 CA*	X	X	X	Relocated existing California Building Standards into IBC format
2105A.6 CA	*2105A.6 CA*	X	X	X	Relocated existing California Building Standards into IBC format
	2106A.1.1.1	X	X	X	
	2106A.1.1.2	X	X	X	
	2106A.1.1.3	X	X	X	
	2106A.5.3 CA	X	X	X	
2106A.1.12.4, 2105A.8	*2106A.5.3.1 CA*	X	X	X	Relocated existing California Building Standards into IBC format
2106A.1.12.4 Item 1	*2106A.5.3.2 CA*	X	X	X	Relocated existing California Building Standards into IBC format

2106A.1.7	*2106A.5.4 CA*	X	X	X	Relocated existing California Building Standards into IBC format
2107A.1.4	*2107A.1.1 CA*	X	X	X	Relocated existing California Building Standards into IBC format
2107A.1.5.3	*2107A.4 CA*	X	X	X	Relocated existing California Building Standards into IBC format
2106A.2.14.1	*2107A.5 CA*	X	X	X	Relocated existing California Building Standards into IBC format
2106A.2.7	*2107A.6 CA*	X	X	X	Relocated existing California Building Standards into IBC format
2106A.2.3.3 CA	*2107A.9 CA*	X	X	X	Relocated existing California Building Standards into IBC format
2107A.3 CA	*2107A.10 CA*	X	X	X	Relocated existing California Building Standards into IBC format
	2107A.12	X	X	X	
	2108A.1	X	X	X	
	2108A.2	X	X	X	
	2108A.5	X	X	X	
2109A	*2109A*	X	X	X	Relocated existing California Building Standards into IBC format
2110A.1	*2110A.1*	X	X	X	Relocated existing California Building Standards into IBC format
	2111A.3	X	X	X	
	2113A.3	X	X	X	
2104A.4.2	*2113A.5*	X	X	X	
2112A	*2114A*	X	X	X	Relocated existing California Building Standards into IBC format
2115A	*2115A*	X	X	X	Relocated existing California Building Standards into IBC format

REPEAL OF EXISTING CALIFORNIA AMENDMENTS IN PART OR IN WHOLE THAT ARE NO LONGER NECESSARY AS FOLLOWS:

2001 CBC SECTION 2101A – GENERAL: Repeal amendment in following subsection.

~~*2101A.3*~~ *and* ~~*2101A.4*~~.

~~2001 CBC SECTION 2102A – MATERIAL STANDARDS:~~ Repeal all amendments in this section.

2001 CBC SECTION 2103A – MORTAR AND GROUT: Repeal amendments in following subsections.

~~*2103A.1*~~ *and* ~~*2103A.3.2*~~.

2001 CBC SECTION 2104A – CONSTRUCTION: Repeal amendments in following subsections.

~~*2104A.3.4, 2104A.3.5*~~ *and* ~~*2104A.5*~~.

2001 CBC SECTION 2105A – QUALITY ASSURANCE: Repeal amendments in following subsections.

~~*2105A.1, 2105A.4, 2105A.5*~~ *and* ~~*2105A.7*~~.

2001 CBC SECTION 2106A – GENERAL DESIGN REQUIREMENTS: Repeal amendments in following subsections.

~~*2106A.1.1, 2106A.1.5.1, 2106A.1.5.2, 2106A.1.5.3, 2106A.1.5.4, 2106A.1.6, 2106A.1.6,*~~ ~~*2106A.1.9, 2106A,1.12.2, 2106A.12.3 , 2106A.1.12.4*~~ *item # 2,* ~~*2106A.2.12.1, 2106A.2.14.3, 2106A.2.14.4, 2106A.2.15*~~ *and* ~~*2106A.3*~~ including all subsections.

2001 CBC SECTION 2107A – WORKING STRESS DESIGN OF MASONRY: Repeal amendments in following subsections.

~~*2107A.1.2, 2107A.1.3.1, 2107A.1.3.2, 2107.1.5*~~ including all subsections, ~~*2107A.2.2*~~ *including all subsections,* ~~*2107A.2.9,*~~ ~~*2107A.2.13*~~ including all subsections *and 210A7.3*.

~~2001 CBC SECTION 2108A – STRENGTH DESIGN OF MASONRY:~~ Repeal all amendments in this section.

2001 CBC SECTION 2110A – GLASS MASONRY: Repeal amendment in the following section.

~~*2110A.2.*~~

~~2001 CBC SECTION 2114A – USE OF EXISTING MASONRY:~~ Repeal all amendments in this section.

~~2001 CBC SECTION 2115A – TESTS AND INSPECTIONS:~~ Repeal all amendments in this section.

2001 CBC CHAPTER 21 TABLES: Repeal all amendment in following Tables.

~~Tables 21A-A, 21A-B, 21A-D, 21A-H-1, 21A-H-2~~ and ~~21A-H-3.~~

EXPRESS TERMS

SECTION 2101*A* - GENERAL

2101*A*.1 Scope. This chapter shall govern the materials, design, construction and quality of masonry.

2101A.1.1 Application. *The scope of application of Chapter 21A is as follows:*

1. *Applications listed in Section 109.2 regulated by the Division of the State Architect-Structural Safety (DSA-SS).These applications include public elementary and secondary schools, community colleges and state-owned or state-leased essential services buildings.*

2. *Applications listed in Section 110.1, and 110.4 regulated by the Office of Statewide Health Planning and Development (OSHPD).These applications include hospitals, skilled nursing facilities, intermediate care facilities and correctional treatment centers.*

   Exception: *[For OSHPD 2]**:** Single-story Type V skilled nursing or intermediate care facilities utilizing wood-frame or light-steel-frame construction as defined in Health and Safety Code Section 129725, which shall comply with CBC Chapter 21 and any applicable amendments therein.*

2101A.1.2 Amendments in this chapter. *DSA - SS and OSHPD adopt this chapter and all amendments.*

Exception: *Amendments adopted by only one agency appear in this chapter preceded with the appropriate acronym of the adopting agency, as follows:*

1. *Division of the State Architect - Structural Safety:*

[DSA-SS] - *For applications listed in Section 109.2*

2*. Office of Statewide Health Planning and Development:*

[OSHPD 1] *- For applications listed in Section 110.1*

[OSHPD 4] *- For applications listed in Section 110.4*

2101*A*.2 Design methods. Masonry shall comply with the provisions of one of the following design methods in this chapter as well as the requirements of Sections 2101*A* through 2104*A*. Masonry designed by the allowable stress design provisions of Section 2101*A*.2.1, the strength design provisions of Section 2101*A*.2.2 or the prestressed masonry provisions of Section 2101*A*.2.3 shall comply with Section 2105*A*.

2101*A*.2.1 Allowable stress design. Masonry designed by the allowable stress design method shall comply with the provisions of Sections 2106*A* and 2107*A*.

2101*A*.2.2 Strength design. Masonry designed by the strength design method shall comply with the provisions of Sections 2106*A* and 2108*A*, *AAC Masonry not permitted by OSHPD and DSA-SS.* ~~except that autoclaved aerated concrete (AAC) masonry shall comply with the provisions of Section 2106 and Chapter 1 and Appendix A of ACI 530/ASCE 5/TMS 402. AAC masonry shall not be used in the seismic-force-resisting system of structures classified as Seismic Design Category B, C, D, E or F.~~

2101*A*.2.3 Prestressed masonry. *Not permitted by OSHPD and DSA-SS*. ~~Prestressed masonry shall be designed in accordance with Chapters 1 and 4 of ACI 530/ASCE 5/TMS 402 and Section 2106. Special inspection during construction shall be provided as set forth in Section 1704.5.~~

2101*A*.2.4 Empirical design. *(Relocated from 2109A, 2001 CBC)* *Not permitted by OSHPD and DSA-SS*. ~~Masonry designed by the empirical design method shall comply with the provisions of Sections 2106 and 2109 or Chapter 5 of ACI 530/ASCE 5/TMS 402.~~

2101*A*.2.5 Glass unit masonry. Glass unit masonry shall comply with the provisions of Section 2110*A*. ~~or~~ *(Relocated from 2110A.1, 2001 CBC)* ~~Chapter 7 of ACI 530/ASCE5/ TMS 402.~~

2101*A*.2.6 Masonry veneer. Masonry veneer shall comply with the provisions of Chapter 14 or Chapter 6 of ACI 530/ASCE 5/TMS 402.

2101*A*.3 Construction documents. The construction documents shall show all of the items required by this code including the following:

1. Specified size, grade, type and location of reinforcement, anchors and wall ties.

2. Reinforcing bars to be welded and welding procedure.

3. Size and location of structural elements.

4. Provisions for dimensional changes resulting from elastic deformation, creep, shrinkage, temperature and moisture.

2101*A*.3.1 Fireplace drawings. The construction documents shall describe in sufficient detail the location, size and construction of masonry fireplaces. The thickness and characteristics of materials and the clearances from walls, partitions and ceilings shall be clearly indicated.

SECTION 2102*A* - DEFINITIONS AND NOTATIONS

2102*A*.1 General. The following words and terms shall, for the purposes of this chapter and as used elsewhere in this code, have the meanings shown herein.

AAC MASONRY. Masonry made of autoclaved aerated concrete (AAC) units, manufactured without internal reinforcement and bonded together using thin- or thick-bed mortar.

ADOBE CONSTRUCTION. Construction in which the exterior load-bearing and nonload-bearing walls and partitions are of unfired clay masonry units, and floors, roofs and interior framing are wholly or partly of wood or other approved materials.

Adobe, stabilized. Unfired clay masonry units to which admixtures, such as emulsified asphalt, are added during the manufacturing process to limit the units' water absorption so as to increase their durability.

Adobe, unstabilized. Unfired clay masonry units that do not meet the definition of "Adobe, stabilized."

ANCHOR. Metal rod, wire or strap that secures masonry to its structural support.

ARCHITECTURAL TERRA COTTA. Plain or ornamental hard-burned modified clay units, larger in size than brick, with glazed or unglazed ceramic finish.

AREA.

Bedded. The area of the surface of a masonry unit that is in contact with mortar in the plane of the joint.

Gross cross-sectional. The area delineated by the out-to-out specified dimensions of masonry in the plane under consideration.

Net cross-sectional. The area of masonry units, grout and mortar crossed by the plane under consideration based on out-to-out specified dimensions.

AUTOCLAVED AERATED CONCRETE (AAC). Low-density cementitious product of calcium silicate hydrates, whose material specifications are defined in ASTM C 1386.

BED JOINT. The horizontal layer of mortar on which a masonry unit is laid.

BOND BEAM. A horizontal grouted element within masonry in which reinforcement is embedded.

BOND REINFORCING. The adhesion between steel reinforcement and mortar or grout.

BRICK.

Calcium silicate (sand lime brick). A masonry unit made of sand and lime.

Clay or shale. A masonry unit made of clay or shale, usually formed into a rectangular prism while in the plastic state and burned or fired in a kiln.

Concrete. A masonry unit having the approximate shape of a rectangular prism and composed of inert aggregate particles embedded in a hardened cementitious matrix.

BUTTRESS. A projecting part of a masonry wall built integrally therewith to provide lateral stability.

CAST STONE. A building stone manufactured from portland cement concrete precast and used as a trim, veneer or facing on or in buildings or structures.

CELL. A void space having a gross cross-sectional area greater than $1^1/_2$square inches (967 mm^2).

CHIMNEY. A primarily vertical enclosure containing one or more passageways for conveying flue gases to the outside atmosphere.

CHIMNEY TYPES.

High-heat appliance type. An approved chimney for removing the products of combustion from fuel-burning, high-heat appliances producing combustion gases in excess of 2,000°F (1093°C) measured at the appliance flue outlet (see Section 2113A.11.3).

Low-heat appliance type. An approved chimney for removing the products of combustion from fuel-burning, low-heat appliances producing combustion gases not in excess of 1,000°F (538°C) under normal operating conditions, but capable of producing combustion gases of 1,400°F (760°C) during intermittent forces firing for periods up to 1 hour. Temperatures shall be measured at the appliance flue outlet.

Masonry type. A field-constructed chimney of solid masonry units or stones.

Medium-heat appliance type. An approved chimney for removing the products of combustion from fuel-burning, medium-heat appliances producing combustion gases not exceeding 2,000°F (1093°C) measured at the appliance flue outlet (see Section 2113A.11.2).

CLEANOUT. An opening to the bottom of a grout space of sufficient size and spacing to allow the removal of debris.

COLLAR JOINT. Vertical longitudinal joint between wythes of masonry or between masonry and backup construction that is permitted to be filled with mortar or grout.

COLUMN, MASONRY. An isolated vertical member whose horizontal dimension measured at right angles to its thickness does not exceed three times its thickness and whose height is at least four times its thickness.

COMPOSITE ACTION. Transfer of stress between components of a member designed so that in resisting loads, the combined components act together as a single member.

COMPOSITE MASONRY. Multiwythe masonry members acting with composite action.

COMPRESSIVE STRENGTH OF MASONRY. Maximum compressive force resisted per unit of net cross-sectional area of masonry, determined by the testing of masonry prisms or a function of individual masonry units, mortar and grout.

CONNECTOR. A mechanical device for securing two or more pieces, parts or members together, including anchors, wall ties and fasteners.

COVER. Distance between surface of reinforcing bar and edge of member.

DIAPHRAGM. A roof or floor system designed to transmit lateral forces to shear walls or other lateral-load-resisting elements.

DIMENSIONS.

Actual. The measured dimension of a masonry unit or element.

Nominal. The specified dimension plus an allowance for the joints with which the units are to be laid. Thickness is given first, followed by height and then length.

Specified. The dimensions specified for the manufacture or construction of masonry, masonry units, joints or any other component of a structure.

EFFECTIVE HEIGHT. For braced members, the effective height is the clear height between lateral supports and is used for calculating the slenderness ratio. The effective height for unbraced members is calculated in accordance with engineering mechanics.

FIREPLACE. A hearth and fire chamber or similar prepared place in which a fire may be made and which is built in conjunction with a chimney.

FIREPLACE THROAT. The opening between the top of the firebox and the smoke chamber.

FOUNDATION PIER. An isolated vertical foundation member whose horizontal dimension measured at right angles to its thickness does not exceed three times its thickness and whose height is equal to or less than four times its

thickness.

GLASS UNIT MASONRY. Masonry composed of glass units bonded by mortar.

GROUTED MASONRY.

Grouted hollow-unit masonry. That form of grouted masonry construction in which certain designated cells of hollow units are continuously filled with grout.

Grouted multiwythe masonry. That form of grouted masonry construction in which the space between the wythes is solidly or periodically filled with grout.

HEAD JOINT. Vertical mortar joint placed between masonry units within the wythe at the time the masonry units are laid.

HEADER (Bonder). A masonry unit that connects two or more adjacent wythes of masonry.

HEIGHT, WALLS. The vertical distance from the foundation wall or other immediate support of such wall to the top of the wall.

MASONRY. A built-up construction or combination of building units or materials of clay, shale, concrete, glass, gypsum, stone or other approved units bonded together with or without mortar or grout or other accepted methods of joining.

Ashlar masonry. Masonry composed of various-sized rectangular units having sawed, dressed or squared bed surfaces, properly bonded and laid in mortar.

Coursed ashlar. Ashlar masonry laid in courses of stone of equal height for each course, although different courses shall be permitted to be of varying height.

Glass unit masonry. Masonry composed of glass units bonded by mortar.

Plain masonry. Masonry in which the tensile resistance of the masonry is taken into consideration and the effects of stresses in reinforcement are neglected.

Random ashlar. Ashlar masonry laid in courses of stone set without continuous joints and laid up without drawn patterns. When composed of material cut into modular heights, discontinuous but aligned horizontal joints are discernible.

Reinforced masonry. Masonry construction in which reinforcement acting in conjunction with the masonry is used to resist forces.

Solid masonry. Masonry consisting of solid masonry units laid contiguously with the joints between the units filled with mortar.

Unreinforced (plain) masonry. Masonry in which the tensile resistance of masonry is taken into consideration and the resistance of the reinforcing steel, if present, is neglected.

MASONRY UNIT. Brick, tile, stone, glass block or concrete block conforming to the requirements specified in Section 2103*A*.

Clay. A building unit larger in size than a brick, composed of burned clay, shale, fired clay or mixtures thereof.

Concrete. A building unit or block larger in size than 12 inches by 4 inches by 4 inches (305 mm by 102 mm by 102 mm) made of cement and suitable aggregates.

Hollow. A masonry unit whose net cross-sectional area in any plane parallel to the load-bearing surface is less than 75 percent of its gross cross-sectional area measured in the same plane.

Solid. A masonry unit whose net cross-sectional area in every plane parallel to the load-bearing surface is 75 percent or more of its gross cross-sectional area measured in the same plane.

(Relocated from 2101A.3, 2001 CBC) ***Hollow-unit Masonry Wall****. Type of construction made with hollow masonry units in which the units are laid and set in mortar, reinforced and grouted solid except as provided in Section 2114A.*

MEAN DAILY TEMPERATURE. The average daily temperature of temperature extremes predicted by a local weather bureau for the next 24 hours.

MORTAR. A plastic mixture of approved cementitious materials, fine aggregates and water used to bond masonry or other structural units.

MORTAR, SURFACE-BONDING. A mixture to bond concrete masonry units that contains hydraulic cement, glass fiber reinforcement with or without inorganic fillers or organic modifiers and water.

PLASTIC HINGE. The zone in a structural member in which the yield moment is anticipated to be exceeded under loading combinations that include earthquakes.

PRESTRESSED MASONRY. Masonry in which internal stresses have been introduced to counteract potential tensile stresses in masonry resulting from applied loads.

PRISM. An assemblage of masonry units and mortar with or without grout used as a test specimen for determining properties of the masonry.

RUBBLE MASONRY. Masonry composed of roughly shaped stones.

Coursed rubble. Masonry composed of roughly shaped stones fitting approximately on level beds and well bonded.

Random rubble. Masonry composed of roughly shaped stones laid without regularity of coursing but well bonded and fitted together to form well-divided joints.

Rough or ordinary rubble. Masonry composed of unsquared field stones laid without regularity of coursing but well bonded.

RUNNING BOND. The placement of masonry units such that head joints in successive courses are horizontally offset at least one-quarter the unit length.

SHEAR WALL.

Detailed plain masonry shear wall. A masonry shear wall designed to resist lateral forces neglecting stresses in reinforcement, and designed in accordance with Section 2106*A*.1.1.

Intermediate prestressed masonry shear wall. A prestressed masonry shear wall designed to resist lateral forces considering stresses in reinforcement, and designed in accordance with Section 2106*A*.1.1.2.

Intermediate reinforced masonry shear wall. A masonry shear wall designed to resist lateral forces considering stresses in reinforcement, and designed in accordance with Section 2106*A*.1.1.

Ordinary plain masonry shear wall. A masonry shear wall designed to resist lateral forces neglecting stresses in reinforcement, and designed in accordance with Section 2106*A*.1.1.

Ordinary plain prestressed masonry shear wall. A prestressed masonry shear wall designed to resist lateral forces considering stresses in reinforcement, and designed in accordance with Section 2106*A*.1.1.1.

Ordinary reinforced masonry shear wall. A masonry shear wall designed to resist lateral forces considering stresses in reinforcement, and designed in accordance with Section 2106*A*.1.1.

Special prestressed masonry shear wall. A prestressed masonry shear wall designed to resist lateral forces considering stresses in reinforcement and designed in accordance with Section 2106*A*.1.1.3 except that only grouted, laterally restrained tendons are used.

Special reinforced masonry shear wall. A masonry shear wall designed to resist lateral forces considering stresses in reinforcement, and designed in accordance with Section 2106*A*.1.1.

SHELL. The outer portion of a hollow masonry unit as placed in masonry.

SPECIFIED. Required by construction documents.

SPECIFIED COMPRESSIVE STRENGTH OF MASONRY, f'_m. Minimum compressive strength, expressed as force per unit of net cross-sectional area, required of the masonry used in construction by the construction documents, and upon which the project design is based. Whenever the quantity f'_m is under the radical sign, the square root of numerical value only is intended and the result has units of pounds per square inch (psi) (MPa).

STACK BOND. The placement of masonry units in a bond pattern is such that head joints in successive courses are vertically aligned. For the purpose of this code, requirements for stack bond shall apply to masonry laid in other than running bond.

STONE MASONRY. Masonry composed of field, quarried or cast stone units bonded by mortar.

Ashlar stone masonry. Stone masonry composed of rectangular units having sawed, dressed or squared bed surfaces and bonded by mortar.

Rubble stone masonry. Stone masonry composed of irregular-shaped units bonded by mortar.

STRENGTH.

Design strength. Nominal strength multiplied by a strength reduction factor.

Nominal strength. Strength of a member or cross section calculated in accordance with these provisions before application of any strength-reduction factors.

Required strength. Strength of a member or cross section required to resist factored loads.

THIN-BED MORTAR. Mortar for use in construction of AAC unit masonry with joints 0.06 inch (1.5 mm) or less.

TIE, LATERAL. Loop of reinforcing bar or wire enclosing longitudinal reinforcement.

TIE, WALL. A connector that connects wythes of masonry walls together.

TILE. A ceramic surface unit, usually relatively thin in relation to facial area, made from clay or a mixture of clay or other ceramic materials, called the body of the tile, having either a "glazed" or "unglazed" face and fired above red heat in the course of manufacture to a temperature sufficiently high enough to produce specific physical properties and characteristics.

TILE, STRUCTURAL CLAY. A hollow masonry unit composed of burned clay, shale, fire clay or mixture thereof, and having parallel cells.

WALL. A vertical element with a horizontal length-to-thickness ratio greater than three, used to enclose space.

Cavity wall. A wall built of masonry units or of concrete, or a combination of these materials, arranged to provide an airspace within the wall, and in which the inner and outer parts of the wall are tied together with metal ties.

Composite wall. A wall built of a combination of two or more masonry units bonded together, one forming the backup and the other forming the facing elements.

Dry-stacked, surface-bonded walls. A wall built of concrete masonry units where the units are stacked dry, without mortar on the bed or head joints, and where both sides of the wall are coated with a surface-bonding mortar.

Masonry-bonded hollow wall. A wall built of masonry units so arranged as to provide an airspace within the wall, and in which the facing and backing of the wall are bonded together with masonry units.

Parapet wall. The part of any wall entirely above the roof line.

WEB. An interior solid portion of a hollow masonry unit as placed in masonry.

WYTHE. Each continuous, vertical section of a wall, one masonry unit in thickness.

NOTATIONS.

A_n = Net cross-sectional area of masonry, square inches (mm^2).

b = Effective width of rectangular member or width of flange for T and I sections, inches (mm).

d_b = Diameter of reinforcement, inches (mm).

F_s = Allowable tensile or compressive stress in reinforcement, psi (MPa).

f_r = Modulus of rupture, psi (MPa).

f_y = Specified yield stress of the reinforcement or the anchor bolt, psi (MPa).

f'_{AAC} = Specified compressive strength of AAC masonry, the minimum compressive strength for a class of AAC masonry as specified in ASTM C 1386, psi (MPa).

f'_m = Specified compressive strength of masonry at age of 28 days, psi (MPa).

f'_{mi} = Specified compressive strength of masonry at the time of prestress transfer, psi (MPa).

K = The lesser of the masonry cover, clear spacing between adjacent reinforcement, or five times d_b, inches (mm).

L_s = Distance between supports, inches (mm).

L_w = Length of wall, inches (mm).

l_d = Required development length or lap length of reinforcement, inches (mm).

l_{de} = Embedment length of reinforcement, inches (mm).

P_w = Weight of wall tributary to section under consideration, pounds (N).

t = Specified wall thickness dimension or the least lateral dimension of a column, inches (mm).

V_n = Nominal shear strength, pounds (N).

V_u = Required shear strength due to factored loads, pounds (N).

W = Wind load, or related internal moments in forces.

γ = Reinforcement size factor.

ρ_n = Ratio of distributed shear reinforcement on plane perpendicular to plane of A_{mv}.

ρ_{max} = Maximum reinforcement ratio.

φ = Strength reduction factor.

SECTION 2103A - MASONRY CONSTRUCTION MATERIALS

2103A.1 Concrete masonry units. Concrete masonry units shall conform to the following standards: ASTM C 55 for concrete brick; ASTM C 73 for calcium silicate face brick; ASTM C 90 for load-bearing concrete masonry units or ASTM C 744 for prefaced concrete and calcium silicate masonry units.

2103A.2 Clay or shale masonry units. Clay or shale masonry units shall conform to the following standards: ASTM C 34 for structural clay load-bearing wall tile; ASTM C 56 for structural clay nonload-bearing wall tile; ASTM C 62 for building brick (solid masonry units made from clay or shale); ASTM C 1088 for solid units of thin veneer brick; ASTM

C 126 for ceramic-glazed structural clay facing tile, facing brick and solid masonry units; ASTM C 212 for structural clay facing tile; ASTM C 216 for facing brick (solid masonry units made from clay or shale); ASTM C 652 for hollow brick (hollow masonry units made from clay or shale); and ASTM C 1405 for glazed brick (single-fired solid brick units).

> **Exception:** Structural clay tile for nonstructural use in fireproofing of structural members and in wall furring shall not be required to meet the compressive strength specifications. The fire-resistance rating shall be determined in accordance with ASTM E 119 and shall comply with the requirements of Table 602.

2103*A*.3 AAC masonry. *Not permitted by OSHPD and DSA-SS.* ~~AAC masonry units shall conform to ASTM C 1386 for the strength class specified.~~

2103*A*.4 Stone masonry units. Stone masonry units shall conform to the following standards: ASTM C 503 for marble building stone (exterior); ASTM C 568 for limestone building stone; ASTM C 615 for granite building stone; ASTM C 616 for sandstone building stone; or ASTM C 629 for slate building stone.

2103*A*.5 Ceramic tile. Ceramic tile shall be as defined in, and shall conform to the requirements of, ANSI A137.1.

2103*A*.6 Glass unit masonry. Hollow glass units shall be partially evacuated and have a minimum average glass face thickness of $^{3}/_{16}$ inch (4.8 mm). Solid glass-block units shall be provided when required. The surfaces of units intended to be in contact with mortar shall be treated with a polyvinyl butyral coating or latex-based paint. Reclaimed units shall not be used.

2103*A*.7 Second-hand units. Second-hand masonry units shall not be reused unless they onform to the requirements of new units. The units shall be of whole, sound materials and free from cracks and other defects that will interfere with proper laying or use. Old mortar shall be cleaned from the unit before reuse.

2103*A*.8 Mortar. Mortar for use in masonry construction shall conform to ASTM C 270 and shall conform to the proportion specifications of Table 2103*A*.8(1) or the property specifications of Table 2103*A*.8(2) *(Relocated from 2103A.3.1, 2001 CBC) for Type S mortar.* ~~Type S or N mortar shall be used for glass unit masonry.~~ The amount of water used in mortar for glass unit masonry shall be adjusted to account for the lack of absorption. Retempering of mortar for glass unit masonry shall not be permitted after initial set. Unused mortar shall be discarded within $2^{1}/_{2}$ hours after initial mixing, except that unused mortar for glass unit masonry shall be discarded within $1^{1}/_{2}$ hours after initial mixing.

(Relocated from 2103A.3.1, 2001 CBC) Lime shall be the last material added to the mixer. Materials for mortar and grout shall be measured in suitable calibrated devices. Shovel measurements will not be accepted. Aggregates for mortar shall conform to the provisions set forth in ASTM C 144, Aggregates for Masonry Mortar.

2103*A*.9 Surface-bonding mortar. Surface-bonding mortar shall comply with ASTM C 887. Surface bonding of concrete masonry units shall comply with ASTM C 946.

2103*A*.10 Mortars for ceramic wall and floor tile. Portland cement mortars for installing ceramic wall and floor tile shall comply with ANSI A108.1A and ANSI A108.1B and be of the compositions indicated in Table 2103*A*.10.

TABLE 2103*A*.10 - CERAMIC TILE MORTAR COMPOSITIONS

LOCATION	MORTAR	COMPOSITION
Walls	Scratchcoat	1 cement; $^{1}/_{5}$ hydrated lime; 4 dry or 5 damp sand
	Setting bed and leveling coat	1 cement; $^{1}/_{2}$ hydrated lime; 5 damp sand to 1 cement 1 hydrated lime, 7 damp sand
Floors	Setting bed	1 cement; $^{1}/_{10}$ hydrated lime; 5 dry or 6 damp sand; or 1 cement; 5 dry or 6 damp sand
Ceilings	Scratchcoat and	1 cement; $^{1}/_{2}$ hydrated lime;

	sand bed	$2^1/_2$ dry sand or 3 damp sand

2103*A*.10.1 Dry-set portland cement mortars. Premixed prepared portland cement mortars, which require only the addition of water and are used in the installation of ceramic tile, shall comply with ANSI A118.1. The shear bond strength for tile set in such mortar shall be as required in accordance with ANSI A118.1. Tile set in dry-set portland cement mortar shall be installed in accordance with ANSI A108.5.

2103*A*.10.2 Latex-modified portland cement mortar. Latex-modified portland cement thin-set mortars in which latex is added to dry-set mortar as a replacement for all or part of the gauging water that are used for the installation of ceramic tile shall comply with ANSI A118.4. Tile set in latex-modified portland cement shall be installed in accordance with ANSI A108.5.

TABLE 2103*A*.8(1) - MORTAR PROPORTIONS

MORTAR	TYPE	PROPORTIONS BY VOLUME (cementitious materials)								AGGREGATE MEASURED IN A DAMP, LOOSE CONDITION
		Portland cement[a] or blended cement[b]	Masonry cement[c]			Mortar cement[d]			HYDRATED LIME[e] OR LIME PUTTY	
			M	S	N	M	S	N		
Cement-lime	M	1	—	—	—	—	—	—	$^1/_4$	Not less than $2^1/_4$ and not more than 3 times the sum of the separate volumes of cementitious materials
	S	1	—	—	—	—	—	—	over $^1/_4$ to $^1/_2$	
	N	1	—	—	—	—	—	—	over $^1/_2$ to $1^1/_4$	
	O	1	—	—	—	—	—	—	over $1^1/_4$ to $2^1/_2$	
Mortar cement	M	1	—	—	—	—	—	1	—	
	M	—	—	—	—	1	—	—	—	
	S	$^1/_2$	—	—	—	—	—	1	—	
	S	—	—	—	—	—	1	—	—	
	N	—	—	—	—	—	—	1	—	
	O	—	—	—	—	—	—	1	—	
Masonry cement	M	1	—	—	1	—	—	—	—	
	M	—	1	—	—	—	—	—	—	
	S	$^1/_2$	—	—	1	—	—	—	—	
	S	—	—	1	—	—	—	—	—	
	N	—	—	—	1	—	—	—	—	
	O	—	—	—	1	—	—	—	—	

a. Portland cement conforming to the requirements of ASTM C 150.

b. Blended cement conforming to the requirements of ASTM C 595.

c. Masonry cement conforming to the requirements of ASTM C 91.

d. Mortar cement conforming to the requirements of ASTM C 1329.

e. Hydrated lime conforming to the requirements of ASTM C 207.

TABLE 2103*A*.8(2) - MORTAR PROPERTIES[a]

MORTAR	TYPE	AVERAGE COMPRESSIVE[b] STRENGTH AT 28 DAYS minimum (psi)	WATER RETENTION minimum (%)	AIR CONTENT maximum (%)
Cement-lime	M	2,500	75	12
	S	1,800	75	12
	N	750	75	14[c]
	O	350	75	14[c]

Mortar cement	M S N O	2,500 1,800 750 350	75 75 75 75	12 12 14[c] 14[c]
Masonry cement	M S N O	2,500 1,800 750 350	75 75 75 75	18 18 20[d] 20[d]

For SI: 1 inch = 25.4 mm, 1 pound per square inch = 6.895 kPa.

a. This aggregate ratio (measured in damp, loose condition) shall not be less than $2^1/_4$ and not more than 3 times the sum of the separate volumes of cementitious materials.

b. Average of three 2-inch cubes of laboratory-prepared mortar, in accordance with ASTM C 270.

c. When structural reinforcement is incorporated in cement-lime or mortar cement mortars, the maximum air content shall not exceed 12 percent.

d. When structural reinforcement is incorporated in masonry cement mortar, the maximum air content shall not exceed 18 percent.

2103*A*.10.3 Epoxy mortar. Ceramic tile set and grouted with chemical-resistant epoxy shall comply with ANSI A118.3. Tile set and grouted with epoxy shall be installed in accordance with ANSI A108.6.

2103*A*.10.4 Furan mortar and grout. Chemical-resistant furan mortar and grout that are used to install ceramic tile shall comply with ANSI A118.5. Tile set and grouted with furan shall be installed in accordance with ANSI A108.8.

2103*A*.10.5 Modified epoxy-emulsion mortar and grout. Modified epoxy-emulsion mortar and grout that are used to install ceramic tile shall comply with ANSI A118.8. Tile set and grouted with modified epoxy-emulsion mortar and grout shall be installed in accordance with ANSI A108.9.

2103*A*.10.6 Organic adhesives. Water-resistant organic adhesives used for the installation of ceramic tile shall comply with ANSI A136.1. The shear bond strength after water immersion shall not be less than 40 psi (275 kPa) for Type I adhesive and not less than 20 psi (138 kPa) for Type II adhesive when tested in accordance with ANSI A136.1. Tile set in organic adhesives shall be installed in accordance with ANSI A108.4.

2103*A*.10.7 Portland cement grouts. Portland cement grouts used for the installation of ceramic tile shall comply with ANSI A118.6. Portland cement grouts for tile work shall be installed in accordance with ANSI A108.10.

2103*A*.11 Mortar for AAC masonry. *Not permitted by OSHPD and DSA-SS*. ~~Thin-bed mortar for AAC masonry shall comply with Section 2103.11.1. Mortar for leveling courses of AAC masonry shall comply with Section 2103.11.2.~~

~~**2103.11.1 Thin-bed mortar for AAC masonry.** Thin-bed mortar for AAC masonry shall be specifically manufactured for use with AAC masonry. Testing to verify mortar properties shall be conducted by the thin-bed mortar manufacturer and confirmed by an independent testing agency:~~

~~1. The compressive strength of thin-bed mortar, as determined by ASTM C 109, shall meet or exceed the strength of the AAC masonry units.~~

~~2. The shear strength of thin-bed mortar shall meet or exceed the shear strength of the AAC masonry units for wall assemblages tested in accordance with ASTM E 519.~~

~~3. The flexural tensile strength of thin-bed mortar shall not be less than the modulus of rupture of the masonry units. Flexural strength shall be determined by testing in accordance with ASTM E 72 (transverse load test), ASTM E 518 Method A (flexural bond strength test) or ASTM C 1072 (flexural bond strength test).~~

~~3.1. For conducting flexural strength tests in accordance with ASTM E 518, at least five test specimens shall be constructed as stack-bonded prisms at least 32 inches (810 mm) high. The type of mortar specified by the AAC unit manufacturer shall be used.~~

~~3.2. For flexural strength tests in accordance with ASTM C 1072, test specimens shall be constructed as stack-bonded prisms comprised with at least three bed joints. A total of at least five joints shall be tested using the type of mortar specified by the AAC unit manufacturer.~~

~~4. The splitting tensile strength of AAC masonry assemblages composed of two AAC masonry units bonded with one thin-bed mortar joint shall be determined in accordance with ASTM C 1006 and shall equal or exceed~~

$$\cancel{2.4\sqrt{f'_{AAC}}}$$

~~**2103.11.2 Mortar for leveling courses of AAC masonry.** Mortar used for the leveling courses of AAC masonry shall conform to Section 2103.8 and shall be Type M or S.~~

2103*A*.12 Grout. Grout shall conform to Table 2103*A*.12 or to ASTM C 476. When grout conforms to ASTM C 476, the grout shall be specified by proportion requirements or property requirements.

TABLE 2103*A*.12 - GROUT PROPORTIONS BY VOLUME FOR MASONRY CONSTRUCTION

TYPE	PARTS BY VOLUME OF PORTLAND CEMENT OR BLENDED CEMENT	PARTS BY VOLUME OF HYDRATED LIME OR LIME PUTTY	AGGREGATE, MEASURED IN A DAMP, LOOSE CONDITION	
			Fine	Coarse
Fine grout	1	0-$^1/_{10}$	2$^1/_4$-3 times the sum of the volumes of the cementitious materials	—
Coarse grout	1	0-$^1/_{10}$	2$^1/_4$-3 times the sum of the volumes of the cementitious materials	1-2 times the sum of the volumes of the cementitious materials

2103A.12.1 *(Relocated from 2103A.4.2, 2001 CBC)* ***Water.*** *Water content shall be adjusted to provide proper workability and to enable proper placement under existing field conditions, without segregation. The water content expressed on a saturated surface-dry basis shall not exceed 0.7 times the weight (mass) of cement.*

2103A.12.2 *(Relocated from 2103A.4.2, Item #1, 2001 CBC)* ***Selecting Proportions.*** *Proportions of ingredients and any additives shall be based on laboratory or field experience with the grout ingredients and the masonry units to be used. For coarse grout, the coarse and fine aggregates shall be combined such that the fine aggregate part is not greater than 80 percent of the total aggregate weight (mass) and at least 90 percent shall pass the 1/2 inch (12.7 mm) sieve. Coarse grout proportioned by weight shall contain not less than 564 pounds of cementitious material per cubic yard (335 kg / m^3).*

~~*3. Fine coarse grout proportioned by volume grout type shall be used as given in accordance with Table 21A-B.*~~

2103A.12.3 *(Relocated from 2103A.4.3, 2001 CBC)* ***Aggregate.*** *Aggregate for grout shall conform to the requirements set forth in ASTM C 404, Aggregates for Grout. Coarse grout shall be used in grout spaces 2 inches (51 mm) or more in width and in all filled-cell masonry construction.*

~~***NOTE:*** *See exception to Section 2105A.3.1 for specified values inexcess of 1,500 psi (10.34 MPa).*~~

2103*A*.13 Metal reinforcement and accessories. Metal reinforcement and accessories shall conform to Sections 2103*A*.13.1 through 2103*A*.13.8.

2103*A*.13.1 Deformed reinforcing bars. Deformed reinforcing bars shall conform to one of the following standards: ASTM A 615 for deformed and plain billet-steel bars for concrete reinforcement; ASTM A 706 for low-alloy steel deformed bars for concrete reinforcement; ASTM A 767 for zinc-coated reinforcing steel bars; ASTM A 775 for epoxy-coated reinforcing steel bars; and ASTM A 996 for rail and axle steel-deformed bars for concrete reinforcement.

2103*A*.13.2 Joint reinforcement. Joint reinforcement shall comply with ASTM A 951. The maximum spacing of crosswires in ladder-type joint reinforcement and point of connection of cross wires to longitudinal wires of truss-type reinforcement shall be 16 inches (400 mm).

2103*A*.13.3 Deformed reinforcing wire. Deformed reinforcing wire shall conform to ASTM A 496.

2103*A*.13.4 Wire fabric. Wire fabric shall conform to ASTM A 185 for plain steel-welded wire fabric for concrete reinforcement or ASTM A 497 for welded deformed steel wire fabric for concrete reinforcement.

2103*A*.13.5 Anchors, ties and accessories. Anchors, ties and accessories shall conform to the following standards: ASTM A 36 for structural steel; ASTM A 82 for plain steel wire for concrete reinforcement; ASTM A 185 for plain steel-welded wire fabric for concrete reinforcement; ASTM A 240 for chromium and chromium-nickle stainless steel plate, sheet and strip; ASTM A 307 Grade A for anchor bolts; ASTM A 480 for flat rolled stainless and heat-resisting steel plate, sheet and strip; and ASTM A 1008 for cold-rolled carbon steel sheet.

2103*A*.13.6 Prestressing tendons. *Not permitted by OSHPD and DSA-SS*. ~~Prestressing tendons shall conform to one of the following standards:~~

~~1. Wire~~	~~ASTM A 421~~
~~2. Low-relaxation wire~~	~~ASTM A 421~~
~~3. Strand~~	~~ASTM A 416~~
~~4. Low-relaxation strand~~	~~ASTM A 416~~
~~5. Bar~~	~~ASTM A 722~~

~~**Exceptions:**~~

~~1. Wire, strands and bars not specifically listed in ASTM A 421, ASTM A 416 or ASTM A 722 are permitted, provided they conform to the minimum requirements in ASTM A 421, ASTM A 416 or ASTM A 722 and are approved by the architect/engineer.~~

~~2. Bars and wires of less than 150 kips per square inch (ksi) (1034 MPa) tensile strength and conforming to ASTM A 82, ASTM A 510, ASTM A 615, ASTM A 996 or ASTM A 706 are permitted to be used as prestressed tendons, provided that:~~

~~2.1. The stress relaxation properties have been assessed by tests according to ASTM E 328 for the maximum permissible stress in the tendon.~~

~~2.2. Other nonstress-related requirements of ACI 530/ASCE 5/TMS 402, Chapter 4, addressing prestressing tendons are met.~~

2103*A*.13.7 Corrosion protection. ~~Corrosion protection for prestressing tendons shall comply with the requirements of ACI 530.1/ASCE 6/TMS 602, Article 2.4G. Corrosion protection for prestressing anchorages, couplers and end blocks shall comply with the requirements of ACI 530.1/ASCE 6/TMS 602, Article 2.4H~~. Corrosion protection for carbon steel accessories used in exterior wall construction or interior walls exposed to a mean relative humidity exceeding 75 percent shall comply with either Section 2103*A*.13.7.2 or 2103*A*.13.7.3. Corrosion protection for carbon steel accessories used in interior walls exposed to a mean relative humidity equal to or less than 75 percent shall comply with either Section 2103*A*.13.7.1, 2103*A*.13.7.2 or 2103*A*.13.7.3.

2103*A*.13.7.1 Mill galvanized. Mill galvanized coatings shall be applied as follows:

1. For joint reinforcement, wall ties, anchors and inserts, a minimum coating of 0.1 ounce per square foot (31g/m^2) complying with the requirements of ASTM A 641 shall be applied.

2. For sheet metal ties and sheet metal anchors, a minimum coating complying with Coating Designation G-60 according to the requirements of ASTM A 653 shall be applied.

3. For anchor bolts, steel plates or bars not exposed to the earth, weather or a mean relative humidity exceeding 75 percent, a coating is not required.

2103*A*.13.7.2 Hot-dipped galvanized. Hot-dipped galvanized coatings shall be applied after fabrication as follows:

1. For joint reinforcement, wall ties, anchors and inserts, a minimum coating of 1.5 ounces per square foot (458 g/m^2) complying with the requirements of ASTM A 153, Class B shall be applied.

2. For sheet metal ties and anchors, the requirements of ASTM A 153, Class B shall be met.

3. For steel plates and bars, the requirements of either ASTM A 123 or ASTM A 153, Class B shall be met.

2103*A*.13.7.3 Epoxy coatings. Carbon steel accessories shall be epoxy coated as follows:

1. For joint reinforcement, the requirements of ASTM A 884, Class A, Type 1 having a minimum thickness of 7 mils (175μm) shall be met.

2. For wire ties and anchors, the requirements of ASTM A 899, Class C having a minimum thickness of 20 mils (508μm) shall be met.

3. For sheet metal ties and anchors, a minimum thickness of 20 mils (508μm) per surface shall be provided or a minimum thickness in accordance with the manufacturer's specification shall be provided.

2103*A*.13.8 Tests. Where unidentified reinforcement is approved for use, not less than three tension and three bending tests shall be made on representative specimens of the reinforcement from each shipment and grade of reinforcing steel proposed for use in the work.

2103A.14 *(Relocated from 2103A.5, 2001 CBC)* ***Additives and Admixtures.***

2103A.14.1 General. *Additives and admixtures to mortar or grout shall not be used unless approved by the enforcement agency.*

2103A.14.2 Antifreeze compounds*. Antifreeze liquids, chloride salts or other such substances shall not be used in mortar or grout.*

2103A.14.3 Air entrainment. *Air-entraining substances shall not be used in mortar or grout unless tests are conducted to determine compliance with the requirements of this code.*

2103A.14.4 Colors. *Only pure mineral oxide, carbon black or synthetic colors may be used. Carbon black shall be limited to a maximum of 3 percent of the weight of the cement.*

SECTION 2104*A* - CONSTRUCTION

2104*A*.1 Masonry construction. Masonry construction shall comply with the requirements of Sections 2104*A*.1.1 through 2104*A*.5 and with ACI 530.1/ASCE 6/TMS 602.

2104*A*.1.1 Tolerances. Masonry, except masonry veneer, shall be constructed within the tolerances specified in ACI 530.1/ASCE 6/TMS 602.

2104*A*.1.2 Placing mortar and units. Placement of mortar and clay and concrete units shall comply with Sections 2104*A*.1.2.1, 2104*A*.1.2.2, 2104*A*.1.2.3 and 2104*A*.1.2.5. Placement of mortar and glass unit masonry shall comply with Sections 2104*A*.1.2.4 and 2104*A*.1.2.5. *Not permitted by OSHPD and DSA-SS*. ~~Placement of thin-bed mortar and AAC masonry shall comply with Section 2104.1.2.6.~~

2104*A*.1.2.1 Bed and head joints. Unless otherwise required or indicated on the construction documents, head and bed joints shall be $^{3}/_{8}$ inch (9.5 mm) thick, except that the thickness of the bed joint of the starting course placed over foundations shall not be less than $^{1}/_{4}$inch (6.4 mm) and not more than $^{3}/_{4}$ inch (19.1 mm).

2104*A*.1.2.1.1 Open-end units. Open-end units with beveled ends shall be fully grouted. Head joints of open-end units with beveled ends need not be mortared. The beveled ends shall form a grout key that permits grouts within $^{5}/_{8}$ inch (15.9 mm) of the face of the unit. The units shall be tightly butted to prevent leakage of the grout.

2104*A*.1.2.2 Hollow units. Hollow units shall be placed such that face shells of bed joints are fully mortared. Webs shall be fully mortared in all courses of piers, columns, pilasters, in the starting course on foundations where adjacent cells or cavities are to be grouted, and where otherwise required. Head joints shall be mortared a minimum distance from each face equal to the face shell thickness of the unit.

2104*A*.1.2.3 Solid units. Unless otherwise required or indicated on the construction documents, solid units shall be placed in fully mortared bed and head joints. The ends of the units shall be completely buttered. Head joints shall not be filled by slushing with mortar. Head joints shall be constructed by shoving mortar tight against the adjoining unit. Bed joints shall not be furrowed deep enough to produce voids.

2104*A*.1.2.4 Glass unit masonry. Glass units shall be placed so head and bed joints are filled solidly. Mortar shall not be furrowed.

Unless otherwise required, head and bed joints of glass unit masonry shall be ¼ inch (6.4 mm) thick, except that vertical joint thickness of radial panels shall not be less than $^{1}/_{8}$ inch (3.2 mm). The bed joint thickness tolerance shall be minus $^{1}/_{16}$ inch (1.6 mm) and plus $^{1}/_{8}$ inch (3.2 mm). The head joint thickness tolerance shall be plus or minus $^{1}/_{8}$ inch (3.2 mm).

2104*A*.1.2.5 Placement in mortar. Units shall be placed while the mortar is soft and plastic. Any unit disturbed to the extent that the initial bond is broken after initial positioning shall be removed and relaid in fresh mortar. *(Relocated from 2110A.2, 2001 CBC)* *All mortar contact surfaces shall be treated to ensure adhesion between mortar and glass.*

2104*A*.1.2.6 Thin-bed mortar and AAC masonry units. *Not permitted by OSHPD and DSA-SS*. ~~AAC masonry construction shall begin with a leveling course of masonry meeting the requirements of Section 2104.1.2. Subsequent courses of AAC masonry units shall be laid with thin-bed mortar using a special notched trowel manufactured for use with thin-bed mortar to spread the mortar so that it completely fills the bed joints. Unless otherwise specified, the head joints shall be similarly filled. Joints in AAC masonry shall be approximately 1/16inch (1.5 mm) and shall be formed by striking on the ends and tops of AAC masonry units with a rubber mallet. Minor adjustments in unit position shall be made while the mortar is still soft and plastic by tapping it into the proper position. Minor sanding of the exposed faces of AAC masonry shall be permitted to provide a smooth and plumb surface.~~

2104*A*.1.2.7 Grouted masonry. *Grouted masonry shall be per Section 2104A.6.* ~~Between grout pours, a horizontal construction joint shall be formed by stopping all wythes at the same elevation and with the grout stopping a minimum of 1-1/2 inches (38 mm) below a mortar joint, except at the top of the wall. Where bond beams occur, the grout pour shall be stopped a minimum of 1/2 inch (12.7 mm) below the top of the masonry.~~

2104*A*.1.3 Installation of wall ties. The ends of wall ties shall be embedded in mortar joints. Wall tie ends shall engage outer face shells of hollow units by at least $^{1}/_{2}$ inch (12.7 mm). Wire wall ties shall be embedded at least $1^{1}/_{2}$ inches (38 mm) into the mortar bed of solid masonry units or solid-grouted hollow units. Wall ties shall not be bent after being embedded in grout or mortar.

2104*A*.1.4 Chases and recesses. Chases and recesses shall be constructed as masonry units are laid. Masonry directly above chases or recesses wider than 12 inches (305 mm) shall be supported on lintels.

2104*A*.1.5 Lintels. The design for lintels shall be in accordance with the masonry design provisions of either Section 2107*A* or 2108*A*. Minimum length of end support shall be 4 inches (102 mm).

2104*A*.1.6 Support on wood. Masonry shall not be supported on wood girders or other forms of wood construction except as permitted in Section 2304*A*.12.

2104*A*.1.7 Masonry protection. The top of unfinished masonry work shall be covered to protect the masonry from the weather.

2104*A*.1.8 Weep holes. Weep holes provided in the outside wythe of masonry walls shall be at a maximum spacing of 33 inches (838 mm) on center (o.c.). Weep holes shall not be less than $^{3}/_{16}$ inch (4.8 mm) in diameter.

2104*A*.2 Corbeled masonry. *(Relocated from 2104A.4.5, 2001 CBC)* Except for corbels designed per Section 2107*A* or 2108*A*, the following shall apply:

1. Corbels shall be constructed of solid masonry ~~units~~ *walls 12 inches (305 mm) or more in thickness.*

2. The maximum corbeled projection beyond the face of the wall shall not exceed:

   2.1. One-~~half~~ *third* of the wall thickness for multiwythe walls bonded by mortar or grout and wall ties or masonry headers *used to support structural members, and not more than 6 inches (152 mm) when used to support a chimney built into the wall* or

   2.2. One-~~half~~ *third* the wythe thickness for single wythe walls, masonry bonded hollow walls, multiwythe walls with open collar joints and veneer walls *used to support structural members, and not more than 6 inches (152 mm) when used to support a chimney built into the wall.*

3. The maximum projection of *each course in such corbel shall not exceed 1 inch (25mm)*. ~~one unit shall not exceed:~~

   ~~3.1. One-half the nominal unit height of the unit or~~

   ~~3.2. One-third the nominal thickness of the unit or wythe.~~

4. The back surface of the corbelled section shall remain within 1 inch (25 mm) of plane.

5. The top course of all corbels shall be a header course.

2104*A*.2.1 Molded cornices. Unless structural support and anchorage are provided to resist the overturning moment, the center of gravity of projecting masonry or molded cornices shall lie within the middle one-third of the supporting wall. Terra cotta and metal cornices shall be provided with a structural frame of approved noncombustible material anchored in an approved manner.

2104*A*.3 Cold weather construction. The cold weather construction provisions of ACI 530.1/ASCE 6/TMS 602, Article 1.8 C, or the following procedures shall be implemented when either the ambient temperature falls below 40°F (4°C) or the temperature of masonry units is below 40°F (4°C).

2104*A*.3.1 Preparation.

1. Temperatures of masonry units shall not be less than 20°F (-7°C) when laid in the masonry. Masonry units containing frozen moisture, visible ice or snow on their surface shall not be laid.

2. Visible ice and snow shall be removed from the top surface of existing foundations and masonry to receive new construction. These surfaces shall be heated to above freezing, using methods that do not result in damage.

2104*A*.3.2 Construction. The following requirements shall apply to work in progress and shall be based on ambient temperature.

2104*A*.3.2.1 Construction requirements for temperatures between 40°F (4°C) and 32°F (0°F). The following construction requirements shall be met when the ambient temperature is between 40°F (4°C) and 32°F (0°C):

1. Glass unit masonry shall not be laid.

2. Water and aggregates used in mortar and grout shall not be heated above 140°F (60°C).

3. Mortar sand or mixing water shall be heated to produce mortar temperatures between 40°F (4°C) and 120°F (49°C) at the time of mixing. When water and aggregates for grout are below 32°F(0°C), they shall be heated.

2104*A*.3.2.2 Construction requirements for temperatures between 32°F (0°C) and 25°F (-4°C). The requirements of Section 2104*A*.3.2.1 and the following construction requirements shall be met when the ambient temperature is between 32°F (0°C) and 25°F (-4°C):

1. The mortar temperature shall be maintained above freezing until used in masonry.

2. Aggregates and mixing water for grout shall be heated to produce grout temperature between 70°F (21°C) and 120°F (49°C) at the time of mixing. Grout temperature shall be maintained above 70°F (21°C) at the time of grout placement.

3. *Not permitted by OSHPD and DSA-SS*. ~~Heat AAC masonry units to a minimum temperature of 40°F (4°C) before installing thin-bed mortar.~~

2104*A*.3.2.3 Construction requirements for temperatures between 25°F (-4°C) and 20°F (-7°C). The requirements of Sections 2104*A*.3.2.1 and 2104*A*.3.2.2 and the following construction requirements shall be met when the ambient temperature is between 25°F (-4°C) and 20°F (-7°C):

1. Masonry surfaces under construction shall be heated to 40°F (4°C).

2. Wind breaks or enclosures shall be provided when the wind velocity exceeds 15 miles per hour (mph) (24 km/h).

3. Prior to grouting, masonry shall be heated to a minimum of 40°F (4°C).

2104*A*.3.2.4 Construction requirements for temperatures below 20°F (-7°C). The requirements of Sections 2104*A*.3.2.1, 2104*A*.3.2.2 and 2104*A*.3.2.3 and the following construction requirement shall be met when the ambient temperature is below 20°F (-7°C): Enclosures and auxiliary heat shall be provided to maintain air temperature within the enclosure to above 32°F (0°C).

2104*A*.3.3 Protection. The requirements of this section and Sections 2104*A*.3.3.1 through 2104*A*.3.3.5 apply after the masonry is placed and shall be based on anticipated minimum daily temperature for grouted masonry and anticipated mean daily temperature for ungrouted masonry.

2104*A*.3.3.1 Glass unit masonry. The temperature of glass unit masonry shall be maintained above 40°F (4°C) for 48 hours after construction.

2104*A*.3.3.2 AAC masonry. *Not permitted by OSHPD and DSA-SS*. ~~The temperature of AAC masonry shall be maintained above 32°F (0°C) for the first 4 hours after thin-bed mortar application.~~

2104*A*.3.3.3 Protection requirements for temperatures between 40°F (4°C) and 25°F (-4°C). When the temperature is between 40°F (4°C) and 25°F (-4°C), newly constructed masonry shall be covered with a weather-resistive membrane for 24 hours after being completed.

2104*A*.3.3.4 Protection requirements for temperatures between 25°F (-4°C) and 20°F (-7°C). When the temperature is between 25°F (-4°C) and 20°F (-7°C), newly constructed masonry shall be completely covered with weather-resistive insulating blankets, or equal protection, for 24 hours after being completed. The time period shall be extended to 48 hours for grouted masonry, unless the only cement in the grout is Type III portland cement.

2104*A*.3.3.5 Protection requirements for temperatures below 20°F (-7°C). When the temperature is below 20°F (-7°C), newly constructed masonry shall be maintained at a temperature above 32°F (0°C) for at least 24 hours after being completed by using heated enclosures, electric heating blankets, infrared lamps or other acceptable methods. The time period shall be extended to 48 hours for grouted masonry, unless the only cement in the grout is Type III portland cement.

2104*A*.4 Hot weather construction. The hot weather construction provisions of ACI 530.1/ASCE 6/TMS 602, Article 1.8 D, or the following procedures shall be implemented when the temperature or the temperature and wind-velocity limits of this section are exceeded.

2104*A*.4.1 Preparation. The following requirements shall be met prior to conducting masonry work.

2104*A*.4.1.1 Temperature. When the ambient temperature exceeds 100°F (38°C), or exceeds 90°F (32°C) with a wind velocity greater than 8 mph (3.5 m/s):

1. Necessary conditions and equipment shall be provided to produce mortar having a temperature below 120°F (49°C).

2. Sand piles shall be maintained in a damp, loose condition.

2104*A*.4.1.2 Special conditions. When the ambient temperature exceeds 115°F (46°C), or 105°F (40°C) with a wind velocity greater than 8 mph (3.5 m/s), the requirements of Section 2104***A***.4.1.1 shall be implemented, and materials and mixing equipment shall be shaded from direct sunlight.

2104*A*.4.2 Construction. The following requirements shall be met while masonry work is in progress.

2104*A*.4.2.1 Temperature. When the ambient temperature exceeds 100°F (38°C), or exceeds 90°F (32°C) with a wind velocity greater than 8 mph (3.5 m/s):

1. The temperature of mortar and grout shall be maintained below 120°F (49°C).

2. Mixers, mortar transport containers and mortar boards shall be flushed with cool water before they come into contact with mortar ingredients or mortar.

3. Mortar consistency shall be maintained by retempering with cool water.

4. Mortar shall be used within 2 hours of initial mixing.

5. *Not permitted by OSHPD and DSA-SS*. ~~Thin-bed mortar shall be spread no more than 4 feet (1219 mm) ahead of AAC masonry units.~~

6. *Not permitted by OSHPD and DSA-SS*. ~~AAC masonry units shall be placed within one minute after spreading thin-bed mortar.~~

2104*A*.4.2.2 Special conditions. When the ambient temperature exceeds 115°F (46°C), or exceeds 105°F (40°C) with a wind velocity greater than 8 mph (3.5 m/s), the requirements of Section 2104*A*.4.2.1 shall be implemented and cool mixing water shall be used for mortar and grout. The use of ice shall be permitted in the mixing water prior to use. Ice shall not be permitted in the mixing water when added to the other mortar or grout materials.

2104*A*.4.3 Protection. When the mean daily temperature exceeds 100°F (38°C) or exceeds 90°F (32°C) with a wind velocity greater than 8 mph (3.5 m/s), newly constructed masonry shall be fog sprayed until damp at least three times a day until the masonry is three days old.

2104*A*.5 Wetting of brick. Brick (clay or shale) at the time of laying shall require wetting if the unit's initial rate of water absorption exceeds 30 grams per 30 square inches (19 355 mm^2) per minute or 0.035 ounce per square inch (1 g/645 mm^2) per minute, as determined by ASTM C 67.

2104A.6 *(Relocated from 2104A.6, 2001 CBC)* ***Grouted Masonry.***

2104A.6.1 General conditions. *Grouted masonry shall be constructed in such a manner that all elements of the masonry act together as a structural element. Prior to grouting, the grout space shall be clean so that all spaces to be filled with grout do not contain mortar projections greater than 1/4 inch*

(6.4 mm), mortar droppings and other foreign material. Grout shall be placed so that all spaces to be grouted do not contain voids.

Grout materials and water content shall be controlled to provide adequate fluidity for placement without segregation of the constituents, and shall be mixed thoroughly. Reinforcement shall be clean, properly positioned and solidly embedded in the grout.

The grouting of any section of wall shall be completed in one day with no interruptions greater than one hour.

Between grout pours, a horizontal construction joint shall be formed by stopping all wythes at the same elevation and with the grout stopping a minimum of 1 1/2 inches (38 mm) below a mortar joint, except at the top of the wall. Where bond beams occur, the grout pour shall be stopped a minimum of 1/2 inch (12.7 mm) below the top of the masonry.

2104A.6.1.1 Reinforced grouted masonry.

2104A.6.1.1.1 General. *Reinforced grouted masonry is that form of construction made with clay or shale brick or made with solid concrete building brick in which interior joints of masonry are filled by pouring grout around reinforcing therein as the work progresses.*

At the time of laying, all masonry units shall be free of dust and dirt.

NOTES:

1. *For rate of absorption, see Section ~~2104A.2~~ 2104A.5. All units in a masonry assembly shall have a compatible absorption rate.*

2. *For mortar, see Section ~~2103A~~ 2103A.8.*

3. *See Section ~~2105A.3~~ 2105A.2 for assumed masonry strength.*

2104A.6.1.1.2 Low-lift grouted construction*. Requirements for construction shall be as follows:*

1. *All units in the two outer wythes shall be laid with full-shoved head joint and bed mortar joints. Masonry headers shall not project into the grout space.*

2. *The minimum grout space for low-lift grout masonry shall be 2 1/2 inches (64 mm). Floaters shall be used where the grout space exceeds 5 inches (127 mm) in width. The thickness of grout between masonry units and floaters shall be a minimum of 1 inch (25 mm). Floaters shall be worked into fresh puddled grout using a vibrating motion until half of the floater is embedded in the grout. All reinforcing and wire ties shall be embedded in the grout. The thickness of the grout between masonry units and reinforcing shall be a minimum of one bar diameter.*

3. *One tier of a grouted reinforced masonry wall may be carried up 12 inches (305 mm) before grouting, but the other tier shall be laid up and grouted in lifts not to exceed one masonry unit in height. All grout shall be puddled with a mechanical vibrator or wood stick immediately after placing so as to completely fill all voids and to consolidate the grout. All vertical and horizontal steel shall be held firmly in place by a frame or suitable devices.*

4. *If the work is stopped for one hour or more, the horizontal construction joints shall be formed by stopping all wythes at the same elevation, and with the grout 1/2 inch (13 mm) below the top.*

5. *Toothing of masonry walls is prohibited. Racking is to be held to a minimum.*

6. *The wythes shall be bonded together with wall ties in accordance with Section 2104A.6.1.1.3, Item 2.*

***2104A.6.1.1.3 High-lift grouted construction**. Where high-lift grouting is used, the method shall be subject to the approval of the enforcement agency. Requirements for construction shall be as follows:*

1. *All units in the two wythes shall be laid with full head and bed mortar joints.*

2. *The two wythes shall be bonded together with wall ties. Ties shall not be less than No. 9 wire in the form of rectangles 4 inches (102 mm) wide and 2 inches (51 mm) in length less than the overall wall thickness. Kinks, water drips, or deformations shall not be permitted in the ties. One tier of the wall shall be built up not more than 16 inches (406 mm) ahead of the other tier. Ties shall be laid not to exceed 24 inches (610 mm) on center horizontally and 16 inches (406 mm) on center vertically for running bond, and not more than 24 inches (610 mm) on center horizontally and 12 inches (305 mm) on center vertically for stack bond.*

3. *Cleanouts shall be provided for each pour by leaving out every other unit in the bottom tier of the section being poured or by cleanout openings in the foundation. The foundation or other horizontal construction joints shall be cleaned of all loose material and mortar droppings before each pour. The cleanouts shall be sealed before grouting, after inspection.*

4. *The grout space in high-lift grouted masonry shall be a minimum of 3 1/2 inches (89 mm). All reinforcing and wire ties shall be embedded in the grout. The thickness of the grout between masonry units and reinforcing shall be a minimum of one bar diameter.*

5. *Vertical grout barriers or dams shall be built of solid masonry across the grout space the entire height of the wall to control the flow of the grout horizontally. Grout barriers shall not be more than 30 feet (9144 mm) apart.*

6. *An approved admixture of a type that reduces early water loss and produces an expansive action shall be used in high-lift grout.*

7. *Grouting shall be done in a continuous pour in lifts not exceeding 4 feet (1219 mm).Grout shall be consolidated by mechanical vibration only, and shall be reconsolidated after excess moisture has been absorbed, but before plasticity is lost. The grouting of any section of a wall between control barriers shall be completed in one day, with no interruptions greater than one hour.*

   NOTE: For special inspection requirements, see ~~Section 2105A.3~~ Chapter 17A and for testing see Section 2105A.4.

8. ***Stresses.** All reinforced grouted masonry shall be so constructed that the unit stresses do not exceed those set forth in Sections ~~2107A.2.5 through 2107A.2.11~~ 2107A or 2108A.*

2104A.6.1.2 Reinforced hollow-unit masonry.

***2104A.6.1.2.1 General.** Reinforced hollow-unit masonry is that type of construction made with hollow-masonry units in which cells are continuously filled with grout, and in which reinforcement is embedded. All cells shall be solidly filled with grout in reinforced hollow-unit masonry, except as provided in Section ~~2112A.1~~ 2114A.1. Construction shall be one of the two following methods: The low-lift method where the maximum height of construction laid before grouting is 4 feet (1220 mm), or the high-lift method where the full height of construction between horizontal cold joints is grouted in one operation. General requirements for construction shall be as follows:*

1. *All reinforced hollow-unit masonry shall be built to preserve the unobstructed vertical continuity of the cells to be filled. All head joints shall be solidly filled with mortar for a distance in from the face of the wall or unit not less than the thickness of the longitudinal face shells.*

2. *Mortar shall be as specified in Section 2103A.*

3. *Walls and cross webs forming such cells to be filled shall be full bedded in mortar to prevent leakage of grout.*

4. *Bond shall be provided by lapping units in successive vertical courses. Where stack bond is used in reinforced hollow-unit masonry, the open-end type of unit shall be used with vertical reinforcement spaced a maximum of 16 inches (406 mm) on center.*

5. *Vertical cells to be filled shall have vertical alignment sufficient to maintain a clear unobstructed, continuous vertical cell measuring not less than 2 inches by 3 inches (51 mm by 76 mm), except the minimum cell dimension for high-lift grout shall be 3 inches (76 mm).*

6. *At the time of laying, all masonry units shall be free of dust and dirt.*

7. *Grout shall be a workable mix suitable for placing without segregation and shall be thoroughly mixed. Grout shall be placed by pumping or an approved alternate method and shall be placed before initial set or hardening occurs. Grout shall be consolidated by mechanical vibration during placing and reconsolidated after excess moisture has been absorbed, but before workability is lost. The grouting of any section of a wall shall be completed in one day, with no interruptions greater than one hour.*

   NOTE: For special inspection requirements, see ~~Section 2105A.3~~ Chapter 17A. For Testing see Section 2105A.

8. *All reinforcing and wire ties shall be embedded in the grout. The space between masonry unit surfaces and reinforcing shall be a minimum of one bar diameter.*

9. *Horizontal reinforcement shall be placed in bond beam units with a minimum grout cover of 1 inch (25 mm) above steel for each grout pour. The depth of the bond beam channel below the top of the unit shall be a minimum of 1 1/2 inches (38 mm) and the width shall be 3 inches (76 mm) minimum.*

2104A.6.1.2.2 Low-lift grouted construction*. Units shall be laid a maximum of 4 feet (1220 mm) before grouting, and all over-hanging mortar and mortar droppings shall be removed. Grouting shall follow each 4 feet (1220 mm) of construction laid and shall be consolidated so as to completely fill all voids and embed all reinforcing steel. When grouting is stopped for one hour or longer, horizontal construction joints shall be formed by stopping the pour of grout not less than 1/2 inch (13 mm) or more than 2 inches (51 mm) below the top of the uppermost unit grouted. Horizontal steel shall be fully embedded in grout in an uninterrupted pour.*

2104A.6.1.2.3 High-lift grouted construction*. Where high-lift grouting is used, the method shall be approved by the enforcement agency. Cleanout openings shall be provided in every cell at the bottom of each pour of grout. Alternatively, if the course at the bottom of the pour is constructed entirely of inverted open-end bond beam units, cleanout openings need only be provided in every reinforced cell at the bottom of each pour of grout. The foundation or other horizontal construction joints shall be cleaned of all loose material and mortar droppings before each pour. The cleanouts shall be sealed before grouting. An approved admixture that reduces early water loss and produces an expansive action shall be used in the grout.*

2104A.6.1.2.4 Stresses. *All reinforced hollow-unit masonry shall be so constructed that the units stressed do not exceed those set forth in ~~Sections 2107A.2.5 through 2107A.2.11~~ 2107A or 2108A.*

Vertical barriers of masonry may be built across the grout space. The grouting of any section of wall between barriers shall be completed in one day with no interruption longer than one hour.

NOTE: See Section ~~2105A.3~~ 2105A.4 for assumed masonry strength.

***2104A.6.2* Construction requirements**. *Reinforcement and embedded items shall be placed and securely anchored against moving prior to grouting. Bolts shall be accurately set with templates or by approved equivalent means and held in place to prevent dislocation during grouting.*

Segregation of the grout materials and damage to the masonry shall be avoided during the grouting process.

Grout shall be consolidated by mechanical vibration during placement before loss of plasticity in a manner to fill the grout space. Grout pours greater than 12 inches (300 mm) in height shall be reconsolidated by mechanical vibration to minimize voids due to water loss. Grout not mechanically vibrated shall be puddled.

2104A.7 *(Relocated from 2104A.7, 2001 CBC)* **Aluminum Equipment.** *Grout shall not be handled nor pumped utilizing aluminum equipment unless it can be demonstrated with the materials and equipment to be used that there will be no deleterious effect on the strength of the grout.*

SECTION 2105*A* - QUALITY ASSURANCE

2105*A*.1 General. A quality assurance program shall be used to ensure that the constructed masonry is in compliance with the construction documents.

The quality assurance program shall comply with the inspection and testing requirements of Chapter 17*A*.

2105*A*.2 Acceptance relative to strength requirements.

2105*A*.2.1 Compliance with f'_m, ~~and f'_{AAC}.~~ Compressive strength of masonry shall be considered satisfactory if the compressive strength of each masonry wythe and grouted collar joint equals or exceeds the value of f'_m for clay and concrete masonry and *requirements of Section 2105A.2.2 is satisfied* ~~f'_{AAC} for AAC masonry~~. For partially grouted clay and concrete masonry, the compressive strength of both the grouted and ungrouted masonry shall equal or exceed the applicable f'_m. ~~At the time of prestress, the compressive strength of the masonry shall equal or exceed f'_m, which shall be less than or equal to f'_m.~~ *(Relocated from 2105A.3.0, 2001 CBC) The specified compressive strength, f'_m, assumed in design shall be 1,500 psi (10.34 MPa) for all masonry construction using materials and details of construction required herein. Testing of the constructed masonry shall be provided in accordance with Section 2105A.4.*

EXCEPTION: *Subject to the approval of the enforcement agency, higher values of f'_m may be used in the design of reinforced grouted masonry and reinforced hollow-unit masonry. The approval shall be based on prism test results submitted by the architect or engineer which demonstrate the ability of the proposed construction to meet prescribed performance criteria for strength and stiffness. The design shall assume that the reinforcement will be placed in a location that will produce the largest stresses within the tolerances allowed in Section ~~2104A.5~~ 2104A.1.1 and shall take into account the mortar joint depth. In no case shall the f'_m assumed in design exceed 2,500 psi (17.24 MPa).*

Where an f'_m greater than 1,500 psi (10.34 MPa) is approved, the architect or structural engineer shall establish a method of quality control of the masonry construction acceptable to the enforcement agency which shall be described in the contract specifications. Compliance with the requirements for the specified compressive strength of masonry f'_m shall be provided in accordance with ~~Section 2105A.3.2, 2105A.3.3, 2105A.3.4 or 2105A.3.5~~ Sections 2105A.2.2.2, 2105A.4 and 2105A.5. Substantiation for the specified compressive strength prior to the start of construction may be obtained in accordance with Section 2105A.2.2.3.

2105*A*.2.2 Determination of compressive strength. The compressive strength for each wythe shall be determined by the unit strength method or by the prism test method *before construction* as specified herein.

2105*A*.2.2.1 Unit strength method.

2105*A*.2.2.1.1 Clay masonry. The compressive strength of masonry shall be determined based on the strength of the units and the type of mortar specified using Table 2105*A*.2.2.1.1, provided:

1. Units conform to ASTM C 62, ASTM C 216 or ASTM C 652 and are sampled and tested in accordance with ASTM C 67.

2. Thickness of bed joints does not exceed $^5/_8$ inch (15.9 mm).

3. For grouted masonry, the grout meets one of the following requirements:

3.1. Grout conforms to ASTM C 476.

3.2. Minimum grout compressive strength equals or exceeds f'_m but not less than 2,000 psi (13.79 MPa). The compressive strength of grout shall be determined in accordance with ASTM C 1019.

TABLE 2105A.2.2.1.1 - COMPRESSIVE STRENGTH OF CLAY MASONRY

NET AREA COMPRESSIVE STRENGTH OF CLAY MASONRY UNITS (psi)		NET AREA COMPRESSIVE STRENGTH OF MASONRY (psi)
Type M or S mortar	Type N mortar	
1,700	2,100	1,000
3,350	4,150	1,500
4,950	6,200	2,000
6,600	8,250	2,500
8,250	10,300	3,000
9,900	—	3,500
13,200	—	4,000

For SI: 1 pound per square inch = 0.00689 MPa.

2105A.2.2.1.2 Concrete masonry. The compressive strength of masonry shall be determined based on the strength of the unit and type of mortar specified using Table 2105A.2.2.1.2, provided:

1. Units conform to ASTM C 55 or ASTM C 90 and are sampled and tested in accordance with ASTM C 140.

2. Thickness of bed joints does not exceed $^5/_8$ inch (15.9 mm).

3. For grouted masonry, the grout meets one of the following requirements:

3.1. Grout conforms to ASTM C 476.

3.2. Minimum grout compressive strength equals or exceeds f'_m but not less than 2,000 psi (13.79 MPa). The compressive strength of grout shall be determined in accordance with ASTM C 1019.

TABLE 2105A.2.2.1.2 - COMPRESSIVE STRENGTH OF CONCRETE MASONRY

NET AREA COMPRESSIVE STRENGTH OF CONCRETE MASONRY UNITS (psi)		NET AREA COMPRESSIVE STRENGTH OF MASONRY (psi)[a]
Type M or S mortar	Type N mortar	
1,250	1,300	1,000
1,900	2,150	1,500
2,800	3,050	2,000
3,750	4,050	2,500
4,800	5,250	3,000

For SI: 1 inch = 25.4 mm, 1 pound per square inch = 0.00689 MPa.

a. For units less than 4 inches in height, 85 percent of the values listed.

2105*A*.2.2.1.3 AAC masonry. *Not permitted by OSHPD and DSA-SS*. ~~The compressive strength of AAC masonry shall be based on the strength of the AAC masonry unit only and the following shall be met:~~

~~1. Units conform to ASTM C 1386.~~

~~2. Thickness of bed joints does not exceed $^{1}/_{8}$ inch (3.2 mm).~~

~~3. For grouted masonry, the grout meets one of the following requirements:~~

~~3.1. Grout conforms to ASTM C 476.~~

~~3.2. Minimum grout compressive strength equals or exceeds f'_{AAC} but not less than 2,000 psi (13.79 MPa). The compressive strength of grout shall be determined in accordance with ASTM C 1019.~~

2105*A*.2.2.2 Prism test method.

2105*A*.2.2.2.1 General. The compressive strength of clay and concrete masonry shall be determined by the prism test method *prior to the start of construction and during construction*:

1. Where specified in the construction documents.

2. Where masonry does not meet the requirements for application of the unit strength method in Section 2105*A*.2.2.1.

3. Where required by Section 2105A.2.1.

2105*A*.2.2.2.2 Number of prisms per test. *(Relocated from 2105A.3.2, Item #2, 2001 CBC)* *Prior to the start of construction, a* ~~A~~ prism test shall consist of ~~three~~ *five* prisms constructed and tested in accordance with ASTM C 1314. *A set of three masonry prisms shall be built during construction in accordance with ASTM C 1314 for each 5,000 square feet (465m2) of wall area, but not less than one set of three prisms for the project. Each set of prisms shall equal or exceed f'_m.*

2105A.2.2.3 *(Relocated from 2105A.3.3, 2001 CBC)* ***Masonry Prism test record.*** *Compressive design strength verification by masonry prism test records shall meet the following:*

1. A masonry prism test record approved by the enforcement agency of at least 30 masonry prisms which were built and tested in accordance with ASTM C-1314. Prisms shall have been constructed under the observation of an engineer or special inspector or an approved agency and shall have been tested by an approved agency.

2. Masonry prisms shall be representative of the corresponding construction.

3. The average compressive strength of the test record shall equal or exceed 1.33 f'_m.

2105*A*.3 Testing prisms from constructed masonry. When approved by the building official, acceptance of masonry that does not meet the requirements of Section 2105*A*.2.2.1, ~~or~~ 2105*A*.2.2.2, *2105A.4 or 2105A.5* shall be permitted to be based on tests of prisms cut from the masonry construction in accordance with Sections 2105*A*.3.1, 2105*A*.3.2 and 2105*A*.3.3.

2105*A*.3.1 Prism sampling and removal. A set of three masonry prisms that are at least 28 days old shall be saw cut from the masonry for each 5,000 square feet (465 m^2) of the wall area that is in question but not less than one set of three masonry prisms for the project. The length, width and height dimensions of the prisms shall comply with the requirements of ASTM C 1314. Transporting, preparation and testing of prisms shall be in accordance with ASTM C 1314.

2105A.3.2 Compressive strength calculations. The compressive strength of prisms shall be the value calculated in accordance ASTM C 1314, except that the net cross-sectional area of the prism shall be based on the net mortar bedded area.

2105A.3.3 Compliance. Compliance with the requirement for the specified compressive strength of masonry, f'_m, shall be considered satisfied provided the modified compressive strength equals or exceeds the specified f'_m. Additional testing of specimens cut from locations in question shall be permitted.

2105A.4 *(Relocated from 2105A.3.1, 2001 CBC)* ***Masonry core testing****. This test is to determine the quality of the masonry constructed. Not less than two cores having a diameter of 6 inches (152 mm) shall be taken from each project. Two cores shall be taken from each building for each 5,000 square feet (465 m^2) of the greater of the masonry wall area or the floor area or fraction thereof. The architect or structural engineer in responsible charge of the project or his / her representative (inspector) shall select the areas for sampling. One half of the number of cores taken shall be tested in shear. The shear wall loadings shall test both joints between the grout core and the outside wythes of the masonry. Core samples shall not be soaked before testing. Materials and workmanship shall be such that for all masonry when tested in compression, cores shall show an ultimate strength at least equal to the f'_m assumed in design, but not less than 1,500 psi (10.34 MPa). When tested in shear, the unit shear on the cross section of the core shall not be less than 2.5 $\sqrt{f'_m}$ psi.*

Shear testing apparatus shall be of a design approved by the enforcement agency. Visual examination of all cores shall be made to ascertain if the joints are filled.

The inspector of record or testing agency shall inspect the coring of the masonry walls and shall prepare a report of coring operations for the testing laboratory files and mail one copy to the enforcement agency. Such reports shall include the total number of cores cut, the location, and the condition of all cores cut on each project, regardless of whether the core specimens failed during cutting operation. All cores shall be submitted to the laboratory for examination.

2105A.5 *(Relocated from 2105A.3.4 Item #2, 2001 CBC)* ***Mortar and grout tests.*** *These tests are to establish whether the masonry components meet the specified component strengths. At the beginning of all masonry work, at least one test sample of the mortar and grout shall be taken on three successive working days and at least at one-week intervals thereafter. The samples shall be continuously stored in moist air until tested. They shall meet the minimum strength requirement given in Sections ~~2103A.3 and 2103A.4~~ 2103A.8 and 2103A.12 for mortar and grout, respectively. Additional samples shall be taken whenever any change in materials or job conditions occur, or whenever in the judgment of the architect, structural engineer or the enforcement agency such tests are necessary to determine the quality of the material.*

Test specimens for mortar and grout shall be made as set forth in ~~UBC Standards 21-16 and 21-18~~ ASTM C 109 and ASTM C 1019. In making the mortar test specimens, the mortar shall be taken from the unit soon after spreading. After molding, the molds shall be carefully protected by a covering which shall be kept damp for at least 24 hours, after which the specimens shall be stored and tested as required for concrete cylinders.

In making grout test specimens, the masonry unit molds shall be broken away after the grout has taken its set, but before it has hardened. If an absorbent paper liner is used, the mold may be left in place until the specimen has hardened. The prisms shall be stored as required for concrete cylinders. They shall be tested in the vertical position.

2105A.6 *(Relocated from 2105A.6, 2001 CBC)* ***Combination of Units.*** *In walls or other structural members composed of different kinds or grades of units or materials, a full-scale test panel shall be constructed before the beginning of masonry work. The test panel will be cored and tested as approved by the enforcement agency to determine the compatibility of the materials (including bond strength between the materials). If the materials are not compatible, they will be rejected. The net thickness of any facing unit which is used to resist stress shall not be less than 1-1/2 inches (38 mm).*

SECTION 2106A - SEISMIC DESIGN

2106A.1 Seismic design requirements for masonry. Masonry structures and components shall comply with the requirements in Section 1.14.2.2 and Section 1.14.3, 1.14.4, 1.14.5, 1.14.6 or 1.14.7 of ACI 530/ASCE 5/TMS 402 depending on the structure's seismic design category as determined in Section 1613A. All masonry walls, unless

isolated on three edges from in-plane motion of the basic structural systems, shall be considered to be part of the seismic-force-resisting system. In addition, the following requirements shall be met.

2106*A*.1.1 Basic seismic-force-resisting system. Buildings relying on masonry shear walls as part of the basic seismic-force-resisting system shall comply with Section 1.14.2.2 of ACI 530/ASCE 5/TMS 402 or with Section 2106*A*.1.1.1, 2106*A*.1.1.2 or 2106*A*.1.1.3.

2106*A*.1.1.1 Ordinary plain prestressed masonry shear walls. *Not permitted by OSHPD and DSA-SS*. ~~Ordinary plain prestressed masonry shear walls shall comply with the requirements of Chapter 4 of ACI 530/ASCE 5/TMS 402.~~

2106*A*.1.1.2 Intermediate prestressed masonry shear walls. *Not permitted by OSHPD and DSA-SS.* ~~Intermediate prestressed masonry shear walls shall comply with the requirements of Section 1.14.2.2.4 of ACI 530/ASCE 5/TMS 402 and shall be designed by Chapter 4, Section 4.4.3, of ACI 530/ASCE 5/TMS 402 for flexural strength and by Section 3.3.4.1.2 of ACI 530/ASCE 5/TMS 402 for shear strength. Sections 1.14.2.2.5, 3.3.3.5 and 3.3.4.3.2(c) of ACI 530/ASCE 5/TMS 402 shall be applicable for reinforcement. Flexural elements subjected to load reversals shall be symmetrically reinforced. The nominal moment strength at any section along a member shall not be less than one-fourth the maximum moment strength. The cross-sectional area of bonded tendons shall be considered to contribute to the minimum reinforcement in Section 1.14.2.2.4 of ACI 530/ASCE 5/TMS 402. Tendons shall be located in cells that are grouted the full height of the wall.~~

2106*A*.1.1.3 Special prestressed masonry shear walls. *Not permitted by OSHPD and DSA-SS.* ~~Special prestressed masonry shear walls shall comply with the requirements of Section 1.14.2.2.5 of ACI 530/ASCE 5/TMS 402 and shall be designed by Chapter 4, Section 4.4.3, of ACI 530/ASCE 5/TMS 402 for flexural strength and by Section 3.3.4.1.2 of ACI 530/ASCE 5/TMS 402 for shear strength. Sections 1.14.2.2.5(a), 3.3.3.5 and 3.3.4.3.2(c) of ACI 530/ASCE 5/TMS 402 shall be applicable for reinforcement. Flexural elements subjected to load reversals shall be symmetrically reinforced. The nominal moment strength at any section along a member shall not be less than one-fourth the maximum moment strength. The cross-sectional area of bonded tendons shall be considered to contribute to the minimum reinforcement in Section 1.14.2.2.5 of ACI 530/ASCE 5/TMS 402.~~

~~**2106A.1.1.3.1 Prestressing tendons.** Prestressing tendons shall consist of bars conforming to ASTM A 722.~~

~~**2106A.1.1.3.2 Grouting.** All cells of the masonry wall shall be grouted.~~

2106*A*.2 Anchorage of masonry walls. Masonry walls shall be anchored to the roof and floors that provide lateral support for the wall in accordance with Section 1604*A*.8.2.

2106*A*.3 Seismic Design Category B. Structures assigned to Seismic Design Category B shall conform to the requirements of Section 1.14.4 of ACI 530/ASCE 5/TMS 402 and to the additional requirements of this section.

2106*A*.3.1 Masonry walls not part of the lateral-force-resisting system. Masonry partition walls, masonry screen walls and other masonry elements that are not designed to resist vertical or lateral loads, other than those induced by their own mass, shall be isolated from the structure so that the vertical and lateral forces are not imparted to these elements. Isolation joints and connectors between these elements and the structure shall be designed to accommodate the design story drift.

2106*A*.4 Additional requirements for structures in Seismic Design Category C. Structures assigned to Seismic Design Category C shall conform to the requirements of Section 2106*A*.3, Section 1.14.5 of ACI 530/ASCE 5/TMS 402 and the additional requirements of this section.

2106*A*.4.1 Design of discontinuous members that are part of the lateral-force-resisting system. Columns and pilasters that are part of the lateral-force-resisting system and that support reactions from discontinuous stiff members such as walls shall be provided with transverse reinforcement spaced at no more than one-fourth of the least nominal dimension of the column or pilaster. The minimum transverse reinforcement ratio shall be 0.0015. Beams supporting reactions from discontinuous walls or frames shall be provided with transverse reinforcement spaced at no more than one-half of the nominal depth of the beam. The minimum transverse reinforcement ratio shall be 0.0015.

2106*A*.5 Additional requirements for structures in Seismic Design Category D.Structures assigned to Seismic Design Category D shall conform to the requirements of Section 2106*A*.4, Section 1.14.6 of ACI 530/ASCE 5/TMS 402 and the additional requirements of this section.

2106*A*.5.1 Loads for shear walls designed by the working stress design method. When calculating in-plane shear or diagonal tension stresses by the working stress design method, shear walls that resist seismic forces shall be designed to resist 1.5 times the seismic forces required by Chapter 16*A*. The 1.5 multiplier need not be applied to the overturning moment.

2106*A*.5.2 Shear wall shear strength. For a shear wall whose nominal shear strength exceeds the shear corresponding to development of its nominal flexural strength, two shear regions exist.

For all cross sections within a region defined by the base of the shear wall and a plane at a distance L_w above the base of the shear wall, the nominal shear strength shall be determined by Equation 21*A*-1.

$$V_n = A_n \rho_n f_y$$

(Equation 21*A*-1)

The required shear strength for this region shall be calculated at a distance $L_w/2$ above the base of the shear wall, but not to exceed one-half story height.

For the other region, the nominal shear strength of the shear wall shall be determined from Section 2108*A*.

2106A.5.3 Modifications to ACI 530 / ASCE 5 / TMS 402

2106A.5.3.1 Replace ACI 530 / ASCE 5 / TMS 402 Section 1.14.6.3 as follows:

*1.14.6.3 - **Minimum reinforcement requirements for Masonry Walls**. (Relocated from 2106A.1.12.4, 2001 CBC)The total area of reinforcement in reinforced masonry walls shall not be less than 0.003 times the sectional area of the wall. Neither the horizontal nor the vertical reinforcement shall be less than one third of the total. Horizontal and vertical rebars shall be spaced at not more than 24 inches (610 mm) center to center. The minimum reinforcing shall be No. 4, except that No. 3 bars may be used for ties and stirrups. Vertical wall steel shall have dowels of equal size and equal matched spacing in all footings. Reinforcement shall be continuous around wall corners and through intersections. Only reinforcement which is continuous in the wall shall be considered in computing the minimum area of reinforcement. Reinforcement with splices conforming to ~~Section 2107A.2.2.6~~ ACI 530 / ASCE 5 / TMS 402 Section 2.1.10.7 as modified by Section 2107A shall be considered as continuous reinforcement.*

Horizontal reinforcement shall be provided in the top of footings, at the top of wall openings, at roof and floor levels, and at the top of parapet walls. For walls 12 inches (nominal) (305 mm) or more in thickness, reinforcing shall be equally divided into two layers, except where designed as retaining walls. Where reinforcement is added above the minimum requirements, such additional reinforcement need not be so divided.

In bearing walls of every type of reinforced masonry, there shall not be less than one No. 5 bar or two No. 4 bars on all sides of, and adjacent to, every opening which exceeds 16 inches (406 mm) in either direction, and such bars shall extend not less than 48 diameters, but in no case less than 24 inches (610 mm) beyond the corners of the opening. The bars required by this paragraph shall be in addition to the minimum reinforcement elsewhere required.

When the reinforcement in bearing walls is designed, placed and anchored in position as for columns, the allowable stresses shall be as for columns. ~~The length of the wall to be considered effective shall not exceed the center-to-center distance between loads nor shall it exceed the width of the bearing plus four times the wall thickness.~~

(Relocated from 2104A.8, 2001 CBC) Joint reinforcement shall not be used as principal reinforcement in masonry designed by the strength design method.

2106A.5.3.2 Replace ACI 530 / ASCE 5 / TMS 402 Section 1.14.6.5 as follows:

*1.14.6.5 - **Minimum reinforcement for masonry columns**. (Relocated from 2106A.1.12.4 Item #1, 2001 CBC) The spacing of column ties shall be as follows: not greater than 8 bar diameters, 24 tie diameters, or one half the least dimension of the column for the full column height. Ties shall be at least 3/8" in diameter & shall be embedded in grout. Top tie shall be within 2 inches (51 mm) of the top of the column or of the bottom of the horizontal bar in the supported beam.*

2106A.5.4 *(Relocated from 2106A.1.7, 2001 CBC)* ***Lateral support.*** *Lateral support of masonry may be provided by cross walls, columns, pilasters, counterforts or buttresses where spanning horizontally or by floors, beams, girts or roofs where spanning vertically. Where walls are supported laterally by vertical elements, the stiffness of each vertical element shall exceed that of the tributary area of the wall.*

The clear distance between lateral supports of a beam shall not exceed 32 times the least width of the compression area.

2106*A*.6 Additional requirements for structures in Seismic Design Category E or F. Structures assigned to Seismic Design Category E or F shall conform to the requirements of Section 2106*A*.5 and Section 1.14.7 of ACI 530/ASCE 5/TMS 402.

SECTION 2107*A* - ALLOWABLE STRESS DESIGN

2107*A*.1 General. The design of masonry structures using allowable stress design shall comply with Section 2106*A* and the requirements of Chapters 1 and 2 of ACI 530/ASCE 5/TMS 402 except as modified by Sections 2107*A*.2 through ~~2107.8~~ *2107A.12.*

2107A.1.1 *(Relocated from 2107A.1.4, 2001 CBC)* ***Design assumptions****. The allowable stress design procedure is based on working stresses and linear stress-strain distribution assumptions with all stresses in the elastic range as follows:*

1. Plane sections before bending remain plane after bending.

2. Stress is proportional to strain.

3. Masonry elements combine to form a homogenous member.

4. Tensile forces are resisted only by the tensile reinforcement.

5. Reinforcement is completely surrounded by and bonded to the masonry materials so that they work together as a homogeneous material within the range of working stresses.

~~*6. Masonry elements shall not be used as components for the design of rigid frames except as permitted in Section 2108A.2.6.*~~

2107*A*.2 ACI 530/ASCE 5/TMS 402, Section 2.1.2, load combinations. Delete Section 2.1.2.1.

2107*A*.3 ACI 530/ASCE 5/TMS 402, Section 2.1.3, design strength. Delete Sections 2.1.3.4 through 2.1.3.4.3.

~~**2107A.4 ACI 530/ASCE 5/TMS 402, Section 2.1.6, columns.** Add the following text to Section 2.1.6:~~

~~2.1.6.6 Light-frame construction. Masonry columns used only to support light-frame roofs of carports, porches, sheds or similar structures with a maximum area of 450 square feet (41.8 m^2) assigned to Seismic Design Category A, B or C are permitted to be designed and constructed as follows:~~

~~1. Concrete masonry materials shall be in accordance with Section 2103A.1 of the International Building Code. Clay or shale masonry units shall be in accordance with Section 2103.2 of the International Building Code.~~

~~2. The nominal cross-sectional dimension of columns shall not be less than 8 inches (203 mm).~~

~~3. Columns shall be reinforced with not less than one No. 4 bar centered in each cell of the column.~~

~~4. Columns shall be grouted solid.~~

~~5. Columns shall not exceed 12 feet (3658 mm) in height.~~

~~6. Roofs shall be anchored to the columns. Such anchorage shall be capable of resisting the design loads specified in Chapter 16 of the International Building Code.~~

~~7. Where such columns are required to resist uplift loads, the columns shall be anchored to their footings with two No. 4 bars extending a minimum of 24 inches (610 mm) into the columns and bent horizontally a minimum of 15 inches (381 mm) in opposite directions into the footings. One of these bars is permitted to be the reinforcing bar specified in Item 3 above. The total weight of a column and its footing shall not be less than 1.5 times the design uplift load.~~

2107A.4 Modify ACI 530 / ASCE 5 / TMS 402 Section 2.1.4.2.3 last paragraph as follows:

(Relocated from 2107A.1.5.3, 2001 CBC) Where the anchor bolt edge distance, l_{be}, in the direction of load is less than 12 bolt diameters, the value of B_v in Formula (2-5) shall be reduced by linear interpolation to zero at an l_{be} distance of 1 1/2 inches (38 mm) and confining reinforcement consisting of not less than No. 3 hairpins, hooks or stirrups for end bolts and between horizontal reinforcing for other bolts shall be provided. Where adjacent anchors are spaced closer than $8d_b$, the allowable shear of the adjacent anchors determined by Formula (2-5) shall be reduced by linear interpolation to 0.75 times the allowable shear value at a center-to-center spacing of four bolt diameters.

2107A.5 Modify ACI 530 / ASCE 5 / TMS 402 by adding Section 2.1.4.2.5 as follows:

2.1.4.2.5 - ***Anchor bolts size and materials.*** *(Relocated from 2106A.2.14.1, 2001 CBC) Anchor bolts shall be hex headed bolts conforming to ASTM A 307 or F1554 with the dimensions of the hex head conforming to ANSI / ASME B18.2.1 or plain rod conforming to ASTM A 36 with threaded ends and double hex nuts at the anchored end. Bent bar anchor bolts shall not be used.*

The maximum size anchor shall be 1/2-inch (13 mm) diameter for 6-inch (152 mm) nominal masonry, 3/4-inch (19 mm) diameter for 8-inch (203 mm) nominal masonry, 7/8-inch (22 mm) diameter for 10-inch (254 mm) nominal masonry, and 1-inch (25mm) diameter for 12-inch (304.8 mm) nominal masonry.

~~*…and shall be accurately set with templates.*~~

2107A.6 Modify ACI 530 / ASCE 5 / TMS 402 Section 2.1.9.1 by adding the following:

(Relocated from 2106A.2.7, 2001 CBC) Structural members framing into or supported by walls or columns shall be securely anchored. The end support of girders, beams or other concentrated loads on masonry shall have at least 3 inches (76 mm) in length upon solid bearing not less than 4 inches (102 mm) thick or upon metal bearing plate of adequate design and dimensions to distribute the loads safely on the wall or pier, or upon a continuous reinforced masonry member projecting not less than 3 inches (76 mm) from the face of the wall or other approved methods.

Joists shall have bearing at least 3 inches (76 mm) in length upon solid masonry at least 2 1/2 inches (64 mm) thick, or other provisions shall be made to distribute safely the loads on the wall or pier.

~~**2107.5**~~ ***2107A.7*** **ACI 530/ASCE 5/TMS 402, Section 2.1.10.7.1.1, lap splices.** Modify Section 2.1.10.7.1.1 as follows:

2.1.10.7.1.1 The minimum length of lap splices for reinforcing bars in tension or compression ,l_d, shall be

$l_d = 0.002 d_b f_s$ **(Equation 21*A*-2)**

For SI: $l_d = 0.29 d_b f_s$

but not less than 12 inches (305 mm). In no case shall the length of the lapped splice be less than 40 bar diameters.

where:

d_b = Diameter of reinforcement, inches (mm).

f_s = Computed stress in reinforcement due to design loads, psi (MPa).

In regions of moment where the design tensile stresses in the reinforcement are greater than 80 percent of the allowable steel tension stress ,F_s, the lap length of splices shall be increased not less than 50 percent of the minimum required length. Other equivalent means of stress transfer to accomplish the same 50 percent increase shall be permitted.

Where epoxy coated bars are used, lap length shall be increased by 50 percent.

~~2107.6~~ ***2107A.8*** **ACI 530/ASCE 5/TMS 402, Section 2.1.10.7, splices of reinforcement.** Modify Section 2.1.10.7 as follows:

2.1.10.7 Splices of reinforcement. Lap splices, welded splices or mechanical splices are permitted in accordance with the provisions of this section. All welding shall conform to AWS D1.4. Reinforcement larger than No. 9 (M #29) shall be spliced using mechanical connections in accordance with Section 2.1.10.7.3.

2107A.9 Modify ACI 530 / ASCE 5 / TMS 402 by adding Section 2.1.11 as follows:

2.1.11 - (Relocated from 2106A.2.3.3, Table 21A-R, 2001 CBC) ***Walls and Piers.***

Thickness of Walls. *For thickness limitations of walls as specified in this chapter, nominal thickness shall be used. Stresses shall be determined on the basis of the net thickness of the masonry, with consideration for reduction, such as raked joints.*

The thickness of masonry walls shall be designed so that allowable maximum stresses specified in this chapter are not exceeded. Also, no masonry wall shall exceed the height or length-to-thickness ratio or the minimum thickness as specified in this chapter and as set forth in Table ~~21A-R~~ 2107A.9, unless designed in accordance with ~~Section 2108A.2.4~~ ACI 530 / ASCE 5 / TMS 402 Section 3.3.5.

Piers. *Every pier or wall section which width is less than three times its thickness shall be designed and constructed as required for columns if such pier is a structural member. Every pier or wall section which width is between three and five times its thickness or less than one half the height of adjacent openings shall have all horizontal steel in the form of ties except that in walls 12 inches (305 mm) or less in thickness such steel may be in the form of hair-pins.*

(Relocated from Table 21A-R, 2001 CBC) ***TABLE ~~21A-R~~ 2107A.9 - MINIMUM THICKNESS OF MASONRY WALLS[1, 2]***

TYPE OF MASONRY	*MAXIMUM RATIO UNSUPPORTED HEIGHT OR LENGTH TO THICKNESS[2,3]*	*NOMINAL MINIMUM THICKNESS (inches)*
BEARING OR SHEAR WALLS:		
1. Stone masonry	*14*	*16*
2. Reinforced grouted masonry	*25*	*6*
3. Reinforced hollow-unit masonry	*25*	*6*
NONBEARING WALLS:		
4. Exterior reinforced walls	*30*	*6*
5. Interior partitions reinforced	*36*	*4*

[1]For walls of varying thickness, use the least thickness when determining the height or length to thickness ratio.

[2]In determining the height or length-to-thickness ratio of a cantilevered wall, the dimension to be used shall be twice the dimension of the end of the wall from the lateral support.

[3]*Cantilevered walls not part of a building and not carrying applied vertical loads need not meet these minimum requirements but their design must comply with stress and overturning requirements.*

2107A.10 Add to ACI 530 / ASCE 5 / TMS 402 Section 2.2 as follows:

*2.2 - **Unreinforced masonry.** (Relocated from 2107A.3, 2001 CBC) Not permitted by OSHPD and DSA-SS.*

~~2107.7~~ ***2107A.11*** **ACI 530/ASCE 5/TMS 402, Section 2.3.6, maximum bar size.** Add the following to Chapter 2:

2.3.6 Maximum bar size. The bar diameter shall not exceed one-eighth of the nominal wall thickness and shall not exceed one-quarter of the least dimension of the cell, course or collar joint in which it is placed.

~~2107.8~~ ***2107A.12*** **ACI 530/ASCE 5/TMS 402, Section 2.3.7, maximum reinforcement percentage.** Add the following text to Chapter 2:

2.3.7 Maximum reinforcement percentage. ~~Special reinforced masonry shear walls having a shear span ratio ,M/V_d, equal to or greater than 1.0 and having an axial load, P, greater than 0.05 $f'_m A_n$~~ *All reinforced masonry components* that are subjected to in-plane forces shall have a maximum reinforcement ratio, ρ_{max}, not greater than that computed as follows:

$$\rho_{\max} = \frac{n f'_m}{2 f_y \left(n + \frac{f_y}{f'_m} \right)}$$

(Equation 21*A*-3)

~~The maximum reinforcement ratio does not apply in the out-of-plane direction.~~

SECTION 2108*A* - STRENGTH DESIGN OF MASONRY

2108*A*.1 General. The design of masonry structures using strength design shall comply with Section 2106*A* and the requirements of Chapters 1 and 3 of ACI 530/ASCE 5/TMS 402, except as modified by Sections 2108*A*.2 through 2108*A*.4.

Exception: *Not permitted by OSHPD and DSA-SS*. ~~AAC masonry shall comply with the requirements of Chapter 1 and Appendix A of ACI 530/ASCE 5/TMS 402.~~

2108A.2 *(Relocated from 2107A.3, 2001 CBC)* ***Add to ACI 530 / ASCE 5 / TMS 402 Section 3.2 as follows:***

*3.2 **Unreinforced (plane) masonry -** Not permitted by OSHPD and DSA-SS.*

~~2108.2~~ ***2108A.3*** **ACI 530/ASCE 5/TMS 402, Section 3.3.3.3 development.** Add the following text to Section 3.3.3.3:

The required development length of reinforcement shall be determined by Equation (3-15), but shall not be less than 12 inches (305 mm) and need not be greater than $72d_b$.

~~2108.3~~ ***2108A. 4*** **ACI 530/ASCE 5/TMS 402, Section 3.3.3.4, splices.** Modify items (b) and (c) of Section 3.3.3.4 as follows:

3.3.3.4 (b). A welded splice shall have the bars butted and welded to develop at least 125 percent of the yield strength , f_y, of the bar in tension or compression, as required. Welded splices shall be of ASTM A 706 steel

reinforcement. Welded splices shall not be permitted in plastic hinge zones of intermediate or special reinforced walls or special moment frames of masonry.

3.3.3.4 (c). Mechanical splices shall be classified as Type 1 or 2 according to Section 21.2.6.1 of ACI 318. Type 1 mechanical splices shall not be used within a plastic hinge zone or within a beam-column joint of intermediate or special reinforced masonry shear walls or special moment frames. Type 2 mechanical splices are permitted in any location within a member.

~~2108.4~~ *2108A.5* ACI 530/ASCE 5/TMS 402, Section 3.3.3.5, maximum areas of flexural tensile reinforcement. *Not permitted by OSHPD and DSA-SS.* ~~Add the following text to Section 3.3.3.5:~~

~~3.3.3.5.5 For special prestressed masonry shear walls, strain in all prestressing steel shall be computed to be compatible with a strain in the extreme tension reinforcement equal to five times the strain associated with the reinforcement yield stress ,fy. The calculation of the maximum reinforcement shall consider forces in the prestressing steel that correspond to these calculated strains.~~

SECTION 2109*A* - EMPIRICAL DESIGN OF MASONRY *(Relocated from 2109A, 2001 CBC) - Not permitted by OSHPD and DSA-SS.*

~~**2109.1 General.** Empirically designed masonry shall conform to this chapter or Chapter 5 of ACI 530/ASCE 5/TMS 402.~~

~~**2109.1.1 Limitations.** The use of empirical design of masonry shall be limited as follows:~~

~~1. Empirical design shall not be used for buildings assigned to Seismic Design Category D, E or F as specified in Section 1613, nor for the design of the seismic-force-resisting system for buildings assigned to Seismic Design Category B or C.~~

~~2. Empirical design shall not be used for masonry elements that are part of the lateral-force-resisting system where the basic wind speed exceeds 110 mph (79 m/s).~~

~~3. Empirical design shall not be used for interior masonry elements that are not part of the lateral- force-resisting system in buildings other than enclosed buildings as defined in Chapter 6 of ASCE 7 in:~~

~~3.1. Buildings over 180 feet (55 100 mm) in height.~~

~~3.2. Buildings over 60 feet (18 400 mm) in height where the basic wind speed exceeds 90 mph (40 m/s).~~

~~3.3. Buildings over 35 feet (10 700 mm) in height where the basic wind speed exceeds 100 mph (45 m/s).~~

~~3.4. Where the basic wind speed exceeds 110 mph (79 m/s).~~

~~4. Empirical design shall not be used for exterior masonry elements that are not part of the lateral- force-resisting system and that are more than 35 feet (10 700 mm) above ground:~~

~~4.1. Buildings over 180 feet (55 100 mm) in height.~~

~~4.2. Buildings over 60 feet (18 400 mm) in height where the basic wind speed exceeds 90 mph (40 m/s).~~

~~4.3. Buildings over 35 feet (10 700 mm) in height where the basic wind speed exceeds 100 mph (45 m/s).~~

~~5. Empirical design shall not be used for exterior masonry elements that are less than or equal to 35 feet (10 700 mm) above ground where the basic wind speed exceeds 110 mph (79 m/s).~~

~~6. Empirical design shall only be used when the resultant of gravity loads is within the center third of the wall thickness and within the central area bounded by lines at one-third of each cross-sectional dimension of foundation piers.~~

7. Empirical design shall not be used for AAC masonry.

In buildings that exceed one or more of the above limitations, masonry shall be designed in accordance with the engineered design provisions of Section 2107 or 2108 or the foundation wall provisions of Section 1805.5.

2109.2 Lateral stability.

2109.2.1 Shear walls. Where the structure depends upon masonry walls for lateral stability, shear walls shall be provided parallel to the direction of the lateral forces resisted.

2109.2.1.1 Cumulative length of shear walls. In each direction in which shear walls are required for lateral stability, shear walls shall be positioned in two separate planes. The minimum cumulative length of shear walls provided shall be 0.4 times the long dimension of the building. Cumulative length of shear walls shall not include openings or any element with a length that is less than one-half its height.

2109.2.1.2 Maximum diaphragm ratio. Masonry shear walls shall be spaced so that the length-to-width ratio of each diaphragm transferring lateral forces to the shear walls does not exceed the values given in Table 2109.2.1.2.

TABLE 2109.2.1.2 - DIAPHRAGM LENGTH-TO-WIDTH RATIOS

FLOOR OR ROOF DIAPHRAGM CONSTRUCTION	MAXIMUM LENGTH-TO-WIDTH RATIO OF DIAPHRAGM PANEL
Cast-in-place concrete	5:1
Precast concrete	4:1
Metal deck with concrete fill	3:1
Metal deck with no fill	2:1
Wood	2:1

2109.2.2 Roofs. The roof construction shall be designed so as not to impart out-of-plane lateral thrust to the walls under roof gravity load.

2109.2.3 Surface-bonded walls. Dry-stacked, surface-bonded concrete masonry walls shall comply with the requirements of this code for masonry wall construction, except where otherwise noted in this section.

2109.2.3.1 Strength. Dry-stacked, surface-bonded concrete masonry walls shall be of adequate strength and proportions to support all superimposed loads without exceeding the allowable stresses listed in Table 2109.2.3.1. Allowable stresses not specified in Table 2109.2.3.1 shall comply with the requirements of ACI 530/ASCE 5/TMS 402.

TABLE 2109.2.3.1 - ALLOWABLE STRESS GROSS CROSS-SECTIONAL AREA FOR DRY-STACKED, SURFACE-BONDED CONCRETE MASONRY WALLS

DESCRIPTION	MAXIMUM ALLOWABLE STRESS (psi)
Compression standard block	45
Flexural tension Horizontal span Vertical span	 30 18
Shear	10

-

~~For SI: 1 pound per square inch = 0.006895 MPa.~~

~~**2109.2.3.2 Construction.** Construction of dry- stacked, surface-bonded masonry walls, including stacking and leveling of units, mixing and application of mortar and curing and protection shall comply with ASTM C 946.~~

~~**2109.3 Compressive stress requirements.**~~

~~**2109.3.1 Calculations.** Compressive stresses in masonry due to vertical dead plus live loads, excluding wind or seismic loads, shall be determined in accordance with Section 2109.3.2.1. Dead and live loads shall be in accordance with Chapter 16, with live load reductions as permitted in Section 1607.9.~~

~~**2109.3.2 Allowable compressive stresses.** The compressive stresses in masonry shall not exceed the values given in Table 2109.3.2. Stress shall be calculated based on specified rather than nominal dimensions.~~

~~**TABLE 2109.3.2 - ALLOWABLE COMPRESSIVE STRESSES FOR EMPIRICAL DESIGN OF MASONRY**~~

~~CONSTRUCTION; COMPRESSIVE STRENGTH OF UNIT GROSS AREA (psi)~~	~~ALLOWABLE COMPRESSIVE STRESSES[a] GROSS CROSS-SECTIONAL AREA (psi)~~	
	~~Type M or S mortar~~	~~Type N mortar~~
~~Solid masonry of brick and other solid units of clay or shale; sand-lime or concrete brick:~~		
~~8,000 or greater~~	~~350~~	~~300~~
~~4,500~~	~~225~~	~~200~~
~~2,500~~	~~160~~	~~140~~
~~1,500~~	~~115~~	~~100~~
~~Grouted masonry, of clay or shale; sand-lime or concrete:~~		
~~4,500 or greater~~		
~~2,500~~	~~225~~	~~200~~
~~1,500~~	~~160~~	~~140~~
	~~115~~	~~100~~
~~Solid masonry of solid concrete masonry units:~~		
~~3,000 or greater~~	~~225~~	~~200~~
~~2,000~~	~~160~~	~~140~~
~~1,200~~	~~115~~	~~100~~
~~Masonry of hollow load-bearing units:~~		
~~2,000 or greater~~	~~140~~	~~120~~
~~1,500~~	~~115~~	~~100~~
~~1,000~~	~~75~~	~~70~~
~~700~~	~~60~~	~~55~~
~~Hollow walls (noncomposite masonry bonded)[b]~~		
~~Solid units:~~		
~~2,500 or greater~~	~~160~~	~~140~~
~~1,500~~	~~115~~	~~100~~
~~Hollow units~~	~~75~~	~~70~~
~~Stone ashlar masonry:~~		
~~Granite~~	~~720~~	~~640~~
~~Limestone or marble~~	~~450~~	~~400~~
~~Sandstone or cast stone~~	~~360~~	~~320~~
~~Rubble stone masonry~~		
~~Coursed, rough or random~~	~~120~~	~~100~~

~~For SI: 1 pound per square inch = 0.006895 MPa.~~

~~a. Linear interpolation for determining allowable stresses for masonry units having compressive strengths which are intermediate between those given in the table is permitted.~~

~~b. Where floor and roof loads are carried upon one wythe, the gross cross-sectional area is that of the wythe under load; if both wythes are loaded, the gross cross-sectional area is that of the wall minus the area of the cavity between the wythes. Walls bonded with metal ties shall be considered as noncomposite walls unless collar joints are filled with mortar or grout.~~

~~**2109.3.2.1 Calculated compressive stresses.** Calculated compressive stresses for single wythe walls and for multiwythe composite masonry walls shall be determined by dividing the design load by the gross cross-sectional area of the member. The area of openings, chases or recesses in walls shall not be included in the gross cross-sectional area of the wall.~~

~~**2109.3.2.2 Multiwythe walls.** The allowable stress shall be as given in Table 2109.3.2 for the weakest combination of the units used in each wythe.~~

~~**2109.4 Lateral support.**~~

~~**2109.4.1 Intervals.** Masonry walls shall be laterally supported in either the horizontal or vertical direction at intervals not exceeding those given in Table 2109**A**.4.1.~~

~~**TABLE 2109.4.1 - WALL LATERAL SUPPORT REQUIREMENTS**~~

~~CONSTRUCTION~~	~~MAXIMUM WALL LENGTH TO THICKNESS OR WALL HEIGHT TO THICKNESS~~
~~Bearing walls~~	
~~Solid units or fully grouted~~	~~20~~
~~All others~~	~~18~~
~~Nonbearing walls~~	
~~Exterior~~	~~18~~
~~Interior~~	~~36~~

~~**2109.4.2 Thickness.** Except for cavity walls and cantilever walls, the thickness of a wall shall be its nominal thickness measured perpendicular to the face of the wall. For cavity walls, the thickness shall be determined as the sum of the nominal thicknesses of the individual wythes. For cantilever walls, except for parapets, the ratio of height-to-nominal thickness shall not exceed 6 for solid masonry or 4 for hollow masonry. For parapets, see Section 2109.5.4.~~

~~**2109.4.3 Support elements.** Lateral support shall be provided by cross walls, pilasters, buttresses or structural frame members when the limiting distance is taken horizontally, or by floors, roofs acting as diaphragms or structural frame members when the limiting distance is taken vertically.~~

~~**2109.5 Thickness of masonry.** Minimum thickness requirements shall be based on nominal dimensions of masonry.~~

~~**2109.5.1 Thickness of walls.** The thickness of masonry walls shall conform to the requirements of Section 2109.5.~~

~~**2109.5.2 Minimum thickness.**~~

~~**2109.5.2.1 Bearing walls.** The minimum thickness of masonry bearing walls more than one story high shall be 8 inches (203 mm). Bearing walls of one-story buildings shall not be less than 6 inches (152 mm) thick.~~

~~**2109.5.2.2 Rubble stone walls.** The minimum thickness of rough, random or coursed rubble stone walls shall be 16 inches (406 mm).~~

~~**2109.5.2.3 Shear walls.** The minimum thickness of masonry shear walls shall be 8 inches (203 mm).~~

~~**2109.5.2.4 Foundation walls.** The minimum thickness of foundation walls shall be 8 inches (203 mm) and as required by Section 2109.5.3.1.~~

~~**2109.5.2.5 Foundation piers.** The minimum thickness of foundation piers shall be 8 inches (203 mm).~~

~~**2109.5.2.6 Parapet walls.** The minimum thickness of parapet walls shall be 8 inches (203 mm) and as required by Section 2109.5.4.1.~~

~~**2109.5.2.7 Change in thickness.** Where walls of masonry of hollow units or masonry bonded hollow walls are decreased in thickness, a course or courses of solid masonry shall be interposed between the wall below and the thinner wall above, or special units or construction shall be used to transmit the loads from face shells or wythes above to those below.~~

~~**2109.5.3 Foundation walls.** Foundation walls shall comply with the requirements of Section 2109.5.3.1 or 2109.5.3.2.~~

~~**2109.5.3.1 Minimum thickness.** Minimum thickness for foundation walls shall comply with the requirements of Table 2109.5.3.1. The provisions of Table 2109.5.3.1 are only applicable where the following conditions are met:~~

~~1. The foundation wall does not exceed 8 feet (2438 mm) in height between lateral supports;~~

~~2. The terrain surrounding foundation walls is graded to drain surface water away from foundation walls;~~

~~3. Backfill is drained to remove ground water away from foundation walls;~~

~~4. Lateral support is provided at the top of foundation walls prior to backfilling;~~

~~5. The length of foundation walls between perpendicular masonry walls or pilasters is a maximum of three times the basement wall height;~~

~~6. The backfill is granular and soil conditions in the area are nonexpansive; and~~

~~7. Masonry is laid in running bond using Type M or S mortar.~~

~~**TABLE 2109.5.3.1 FOUNDATION WALL CONSTRUCTION**~~

~~WALL CONSTRUCTION~~	~~NOMINAL WALL THICKNESS (inches)~~	~~MAXIMUM DEPTH OF UNBALANCED BACKFILL (feet)~~
~~Fully grouted masonry~~	~~8~~ ~~10~~ ~~12~~	~~7~~ ~~8~~ ~~8~~
~~Hollow unit masonry~~	~~8~~ ~~10~~ ~~12~~	~~5~~ ~~6~~ ~~7~~
~~Solid unit masonry~~	~~8~~ ~~10~~ ~~12~~	~~5~~ ~~7~~ ~~7~~

~~For SI: 1 inch = 25.4 mm, 1 foot = 304.8 mm.~~

~~**2109.5.3.2 Design requirements.** Where the requirements of Section 2109.5.3.1 are not met, foundation walls shall be designed in accordance with Section 1805.5.~~

~~**2109.5.4 Parapet walls.**~~

~~**2109.5.4.1 Minimum thickness.** The minimum thickness of unreinforced masonry parapets shall meet Section 2109.5.2.6 and their height shall not exceed three times their thickness.~~

~~**2109.5.4.2 Additional provisions.** Additional provisions for parapet walls are contained in Sections 1503.2 and 1503.3.~~

~~**2109.6 Bond.**~~

~~**2109.6.1 General.** The facing and backing of multiwythe masonry walls shall be bonded in accordance with Section 2109.6.2, 2109.6.3 or 2109.6.4.~~

~~**2109.6.2 Bonding with masonry headers.**~~

~~**2109.6.2.1 Solid units.** Where the facing and backing (adjacent wythes) of solid masonry construction are bonded by means of masonry headers, no less than 4 percent of the wall surface of each face shall be composed of headers extending not less than 3 inches (76 mm) into the backing. The distance between adjacent full-length headers shall not exceed 24 inches (610 mm) either vertically or horizontally. In walls in which a single header does not extend through the wall, headers from the opposite sides shall overlap at least 3 inches (76 mm), or headers from opposite sides shall be covered with another header course overlapping the header below at least 3 inches (76 mm).~~

~~**2109.6.2.2 Hollow units.** Where two or more hollow units are used to make up the thickness of a wall, the stretcher courses shall be bonded at vertical intervals not exceeding 34 inches (864 mm) by lapping at least 3 inches (76 mm) over the unit below, or by lapping at vertical intervals not exceeding 17 inches (432 mm) with units that are at least 50 percent greater in thickness than the units below.~~

~~**2109.6.2.3 Masonry bonded hollow walls.** In masonry bonded hollow walls, the facing and backing shall be bonded so that not less than 4 percent of the wall surface of each face is composed of masonry bonded units extending not less than 3 inches (76 mm) into the backing. The distance between adjacent bonders shall not exceed 24 inches (610 mm) either vertically or horizontally.~~

~~**2109.6.3 Bonding with wall ties or joint reinforcement.**~~

~~**2109.6.3.1 Bonding with wall ties.** Except as required by Section 2109.6.3.1.1, where the facing and backing (adjacent wythes) of masonry walls are bonded with wire size W2.8 (MW18) wall ties or metal wire of equivalent stiffness embedded in the horizontal mortar joints, there shall be at least one metal tie for each $4^1/_2$ square feet (0.42 m^2) of wall area. The maximum vertical distance between ties shall not exceed 24 inches (610 mm), and the maximum horizontal distance shall not exceed 36 inches (914 mm). Rods or ties bent to rectangular shape shall be used with hollow masonry units laid with the cells vertical. In other walls, the ends of ties shall be bent to 90-degree (1.57 rad) angles to provide hooks no less than 2 inches (51 mm) long. Wall ties shall be without drips. Additional bonding ties shall be provided at all openings, spaced not more than 36 inches (914 mm) apart around the perimeter and within 12 inches (305 mm) of the opening.~~

~~**2109.6.3.1.1 Bonding with adjustable wall ties.** Where the facing and backing (adjacent wythes) of masonry are bonded with adjustable wall ties, there shall be at least one tie for each 1.77 square feet (0.164 m2) of wall area. Neither the vertical nor horizontal spacing of the adjustable wall ties shall exceed 16 inches (406 mm). The maximum vertical offset of bed joints from one wythe to the other shall be 11/4 inches (32 mm). The maximum clearance between connecting parts of the ties shall be 1/16 inch (1.6 mm). When pintle legs are used, ties shall have at least two wire size W2.8 (MW18) legs.~~

~~**2109.6.3.2 Bonding with prefabricated joint reinforcement.** Where the facing and backing (adjacent wythes) of masonry are bonded with prefabricated joint reinforcement, there shall be at least one cross wire serving as a tie for each 22/3 square feet (0.25 m2) of wall area. The vertical spacing of the joint reinforcing shall not exceed 24 inches (610 mm). Cross wires on prefabricated joint reinforcement shall not be less than W1.7 (MW11) and shall be without drips. The longitudinal wires shall be embedded in the mortar.~~

~~**2109.6.4 Bonding with natural or cast stone.**~~

~~**2109.6.4.1 Ashlar masonry.** In ashlar masonry, bonder units, uniformly distributed, shall be provided to the extent of not less than 10 percent of the wall area. Such bonder units shall extend not less than 4 inches (102 mm) into the backing wall.~~

~~**2109.6.4.2 Rubble stone masonry.** Rubble stone masonry 24 inches (610 mm) or less in thickness shall have bonder units with a maximum spacing of 36 inches (914 mm) vertically and 36 inches (914 mm) horizontally, and if the masonry is of greater thickness than 24 inches (610 mm), shall have one bonder unit for each 6 square feet (0.56 m2) of wall surface on both sides.~~

~~**2109.6.5 Masonry bonding pattern.**~~

~~**2109.6.5.1 Masonry laid in running bond.** Each wythe of masonry shall be laid in running bond, head joints in successive courses shall be offset by not less than one-fourth the unit length or the masonry walls shall be reinforced longitudinally as required in Section 2109.6.5.2.~~

~~**2109.6.5.2 Masonry laid in stack bond.** Where unit masonry is laid with less head joint offset than in Section 2109.6.5.1, the minimum area of horizontal reinforcement placed in mortar bed joints or in bond beams spaced not more than 48 inches (1219 mm) apart, shall be 0.0003 times the vertical cross-sectional area of the wall.~~

~~**2109.7 Anchorage.**~~

~~**2109.7.1 General.** Masonry elements shall be anchored in accordance with Sections 2109.7.2 through 2109.7.4.~~

~~**2109.7.2 Intersecting walls.** Masonry walls depending upon one another for lateral support shall be anchored or bonded at locations where they meet or intersect by one of the methods indicated in Sections 2109.7.2.1 through 2109.7.2.5.~~

~~**2109.7.2.1 Bonding pattern.** Fifty percent of the units at the intersection shall be laid in an overlapping masonry bonding pattern, with alternate units having a bearing of not less than 3 inches (76 mm) on the unit below.~~

~~**2109.7.2.2 Steel connectors.** Walls shall be anchored by steel connectors having a minimum section of 1/4 inch (6.4 mm) by 11/2inches (38 mm), with ends bent up at least 2 inches (51 mm) or with cross pins to form anchorage. Such anchors shall be at least 24 inches (610 mm) long and the maximum spacing shall be 48 inches (1219 mm).~~

~~**2109.7.2.3 Joint reinforcement.** Walls shall be anchored by joint reinforcement spaced at a maximum distance of 8 inches (203 mm). Longitudinal wires of such reinforcement shall be at least wire size W1.7 (MW 11) and shall extend at least 30 inches (762 mm) in each direction at the intersection.~~

~~**2109.7.2.4 Interior nonload-bearing walls.** Interior nonload-bearing walls shall be anchored at their intersection, at vertical intervals of not more than 16 inches (406 mm) with joint reinforcement or 1/4-inch (6.4 mm) mesh galvanized hardware cloth.~~

~~**2109.7.2.5 Ties, joint reinforcement or anchors.** Other metal ties, joint reinforcement or anchors, if used, shall be spaced to provide equivalent area of anchorage to that required by this section.~~

~~**2109.7.3 Floor and roof anchorage.** Floor and roof diaphragms providing lateral support to masonry shall comply with the live loads in Section 1607.3 and shall be connected to the masonry in accordance with Sections 2109.7.3.1 through 2109.7.3.3. Roof loading shall be determined in accordance with Chapter 16 and, when net uplift occurs, uplift shall be resisted entirely by an anchorage system designed in accordance with the provisions of Sections 2.1 and 2.3, Sections 3.1 and 3.3 or Chapter 4 of ACI 530/ASCE 5/TMS 402.~~

~~**2109.7.3.1 Wood floor joists.** Wood floor joists bearing on masonry walls shall be anchored to the wall at intervals not to exceed 72 inches (1829 mm) by metal strap anchors. Joists parallel to the wall shall be anchored with metal straps spaced not more than 72 inches (1829 mm) o.c. extending over or under and secured to at least three joists. Blocking shall be provided between joists at each strap anchor.~~

~~**2109.7.3.2 Steel floor joists.** Steel floor joists bearing on masonry walls shall be anchored to the wall with 3/8-inch (9.5 mm) round bars, or their equivalent, spaced not more than 72 inches (1829 mm) o.c. Where joists are parallel to the wall, anchors shall be located at joist bridging.~~

~~**2109.7.3.3 Roof diaphragms.** Roof diaphragms shall be anchored to masonry walls with 1/2-inch-diameter (12.7 mm) bolts, 72 inches (1829 mm) o.c. or their equivalent. Bolts shall extend and be embedded at least 15 inches (381 mm) into the masonry, or be hooked or welded to not less than 0.20 square inch (129 mm2) of bond beam reinforcement placed not less than 6 inches (152 mm) from the top of the wall.~~

~~**2109.7.4 Walls adjoining structural framing.** Where walls are dependent upon the structural frame for lateral support, they shall be anchored to the structural members with metal anchors or otherwise keyed to the structural members. Metal anchors shall consist of 1/2-inch (12.7 mm) bolts spaced at 48 inches (1219 mm) o.c. embedded 4 inches (102 mm) into the masonry, or their equivalent area.~~

~~**2109.8 Adobe construction.** Adobe construction shall comply with this section and shall be subject to the requirements of this code for Type V construction.~~

~~**2109.8.1 Unstabilized adobe.**~~

~~**2109.8.1.1 Compressive strength.** Adobe units shall have an average compressive strength of 300 psi (2068 kPa) when tested in accordance with ASTM C 67. Five samples shall be tested and no individual unit is permitted to have a compressive strength of less than 250 psi (1724 kPa).~~

~~**2109.8.1.2 Modulus of rupture.** Adobe units shall have an average modulus of rupture of 50 psi (345 kPa) when tested in accordance with the following procedure. Five samples shall be tested and no individual unit shall have a modulus of rupture of less than 35 psi (241 kPa).~~

~~**2109.8.1.2.1 Support conditions.** A cured unit shall be simply supported by 2-inch-diameter (51 mm) cylindrical supports located 2 inches (51 mm) in from each end and extending the full width of the unit.~~

~~**2109.8.1.2.2 Loading conditions.** A 2-inch-diameter (51 mm) cylinder shall be placed at midspan parallel to the supports.~~

~~**2109.8.1.2.3 Testing procedure.** A vertical load shall be applied to the cylinder at the rate of 500 pounds per minute (37 N/s) until failure occurs.~~

~~**2109.8.1.2.4 Modulus of rupture determination.** The modulus of rupture shall be determined by the equation:~~

~~$f_r = 3WL_s/2bt^2$~~ ~~**(Equation 21-4)**~~

~~where, for the purposes of this section only:~~

~~b = Width of the test specimen measured parallel to the loading cylinder, inches (mm).~~

~~f_r = Modulus of rupture, psi (MPa).~~

~~L_s = Distance between supports, inches (mm).~~

~~t = Thickness of the test specimen measured parallel to the direction of load, inches (mm).~~

~~W = The applied load at failure, pounds (N).~~

~~**2109.8.1.3 Moisture content requirements.** Adobe units shall have a moisture content not exceeding 4 percent by weight.~~

~~**2109.8.1.4 Shrinkage cracks.** Adobe units shall not contain more than three shrinkage cracks and any single shrinkage crack shall not exceed 3 inches (76 mm) in length or $^1/_8$ inch (3.2 mm) in width.~~

~~**2109.8.2 Stabilized adobe.**~~

2109.8.2.1 Material requirements. Stabilized adobe shall comply with the material requirements of unstabilized adobe in addition to Sections 2109.8.2.1.1 and 2109.8.2.1.2.

2109.8.2.1.1 Soil requirements. Soil used for stabilized adobe units shall be chemically compatible with the stabilizing material.

2109.8.2.1.2 Absorption requirements. A 4-inch (102 mm) cube, cut from a stabilized adobe unit dried to a constant weight in a ventilated oven at 212°F to 239°F (100°C to 115°C), shall not absorb more than 21/2percent moisture by weight when placed upon a constantly water-saturated, porous surface for seven days. A minimum of five specimens shall be tested and each specimen shall be cut from a separate unit.

2109.8.3 Allowable stress. The allowable compressive stress based on gross cross-sectional area of adobe shall not exceed 30 psi (207 kPa).

2109.8.3.1 Bolts. Bolt values shall not exceed those set forth in Table 2109.8.3.1.

TABLE 2109.8.3.1 - ALLOWABLE SHEAR ON BOLTS IN ADOBE MASONRY

DIAMETER OF BOLTS (inches)	MINIMUM EMBEDMENT (inches)	SHEAR (pounds)
1/2	—	—
5/8	12	200
3/4	15	300
7/8	18	400
1	21	500
1 1/8	24	600

For SI: 1 inch = 25.4 mm, 1 pound = 4.448 N.

2109.8.4 Construction.

2109.8.4.1 General.

2109.8.4.1.1 Height restrictions. Adobe construction shall be limited to buildings not exceeding one story, except that two-story construction is allowed when designed by a registered design professional.

2109.8.4.1.2 Mortar restrictions. Mortar for stabilized adobe units shall comply with Chapter 21 or adobe soil. Adobe soil used as mortar shall comply with material requirements for stabilized adobe. Mortar for unstabilized adobe shall be portland cement mortar.

2109.8.4.1.3 Mortar joints. Adobe units shall be laid with full head and bed joints and in full running bond.

2109.8.4.1.4 Parapet walls. Parapet walls constructed of adobe units shall be waterproofed.

2109.8.4.2 Wall thickness. The minimum thickness of exterior walls in one-story buildings shall be 10 inches (254 mm). The walls shall be laterally supported at intervals not exceeding 24 feet (7315 mm). The minimum thickness of interior load-bearing walls shall be 8 inches (203 mm). In no case shall the unsupported height of any wall constructed of adobe units exceed 10 times the thickness of such wall.

2109.8.4.3 Foundations.

2109.8.4.3.1 Foundation support. Walls and partitions constructed of adobe units shall be supported by foundations or footings that extend not less than 6 inches (152 mm) above adjacent ground surfaces and

~~are constructed of solid masonry (excluding adobe) or concrete. Footings and foundations shall comply with Chapter 18.~~

~~**2109.8.4.3.2 Lower course requirements.** Stabilized adobe units shall be used in adobe walls for the first 4 inches (102 mm) above the finished first-floor elevation.~~

~~**2109.8.4.4 Isolated piers or columns.** Adobe units shall not be used for isolated piers or columns in a load-bearing capacity. Walls less than 24 inches (610 mm) in length shall be considered isolated piers or columns.~~

~~**2109.8.4.5 Tie beams.** Exterior walls and interior load-bearing walls constructed of adobe units shall have a continuous tie beam at the level of the floor or roof bearing and meeting the following requirements.~~

~~**2109.8.4.5.1 Concrete tie beams.** Concrete tie beams shall be a minimum depth of 6 inches (152 mm) and a minimum width of 10 inches (254 mm). Concrete tie beams shall be continuously reinforced with a minimum of two No. 4 reinforcing bars. The ultimate compressive strength of concrete shall be at least 2,500 psi (17.2 MPa) at 28 days.~~

~~**2109.8.4.5.2 Wood tie beams.** Wood tie beams shall be solid or built up of lumber having a minimum nominal thickness of 1 inch (25 mm), and shall have a minimum depth of 6 inches (152 mm) and a minimum width of 10 inches (254 mm). Joints in wood tie beams shall be spliced a minimum of 6 inches (152 mm). No splices shall be allowed within 12 inches (305 mm) of an opening. Wood used in tie beams shall be approved naturally decay-resistant or pressure-treated wood.~~

~~**2109.8.4.6 Exterior finish.** Exterior walls constructed of unstabilized adobe units shall have their exterior surface covered with a minimum of two coats of portland cement plaster having a minimum thickness of 3/4inch (19.1 mm) and conforming to ASTM C 926. Lathing shall comply with ASTM C 1063. Fasteners shall be spaced at 16 inches (406 mm) o.c. maximum. Exposed wood surfaces shall be treated with an approved wood preservative or other protective coating prior to lath application.~~

~~**2109.8.4.7 Lintels.** Lintels shall be considered structural members and shall be designed in accordance with the applicable provisions of Chapter 16.~~

SECTION 2110*A* - GLASS UNIT MASONRY

2110*A*.1 Scope. ~~This section covers the empirical requirements for nonload-bearing glass unit masonry elements in exterior or interior walls.~~

(*Relocated from 2110A.1, 2001 CBC*) *Masonry of glass blocks may be used in non-load-bearing exterior or interior walls and shall conform to the requirements of Section ~~2113A~~ 2115A. Stresses in glass block shall not be utilized. Glass block may be solid or hollow and may contain inserts.*

~~**2110.1.1 Limitations.** Solid or hollow approved glass block shall not be used in fire walls, party walls, fire barriers or fire partitions, or for load-bearing construction. Such blocks shall be erected with mortar and reinforcement in metal channel-type frames, structural frames, masonry or concrete recesses, embedded panel anchors as provided for both exterior and interior walls or other approved joint materials. Wood strip framing shall not be used in walls required to have a fire-resistance rating by other provisions of this code.~~

~~**Exceptions:**~~

~~1. Glass-block assemblies having a fire protection rating of not less than $^{3}/_{4}$hour shall be permitted as opening protectives in accordance with Section 715 in fire barriers and fire partitions that have a required fire-resistance rating of 1-hour or less and do not enclose exit stairways or exit passageways.~~

~~2. Glass-block assemblies as permitted in Section 404.5, Exception 2.~~

~~**2110.2 Units.** Hollow or solid glass-block units shall be standard or thin units.~~

~~**2110.2.1 Standard units.** The specified thickness of standard units shall be at least $3^{7}/_{8}$ inches (98 mm).~~

~~**2110.2.2 Thin units.** The specified thickness of thin units shall be $3^1/_8$ inches (79 mm) for hollow units or 3 inches (76 mm) for solid units.~~

~~**2110.3 Panel size.**~~

~~**2110.3.1 Exterior standard-unit panels.** The maximum area of each individual exterior standard-unit panel shall be 144 square feet (13.4 m^2) when the design wind pressure is 20 psf (958 N/m^2). The maximum panel dimension between structural supports shall be 25 feet (7620 mm) in width or 20 feet (6096 mm) in height. The panel areas are permitted to be adjusted in accordance with Figure 2110.3.1 for other wind pressures.~~

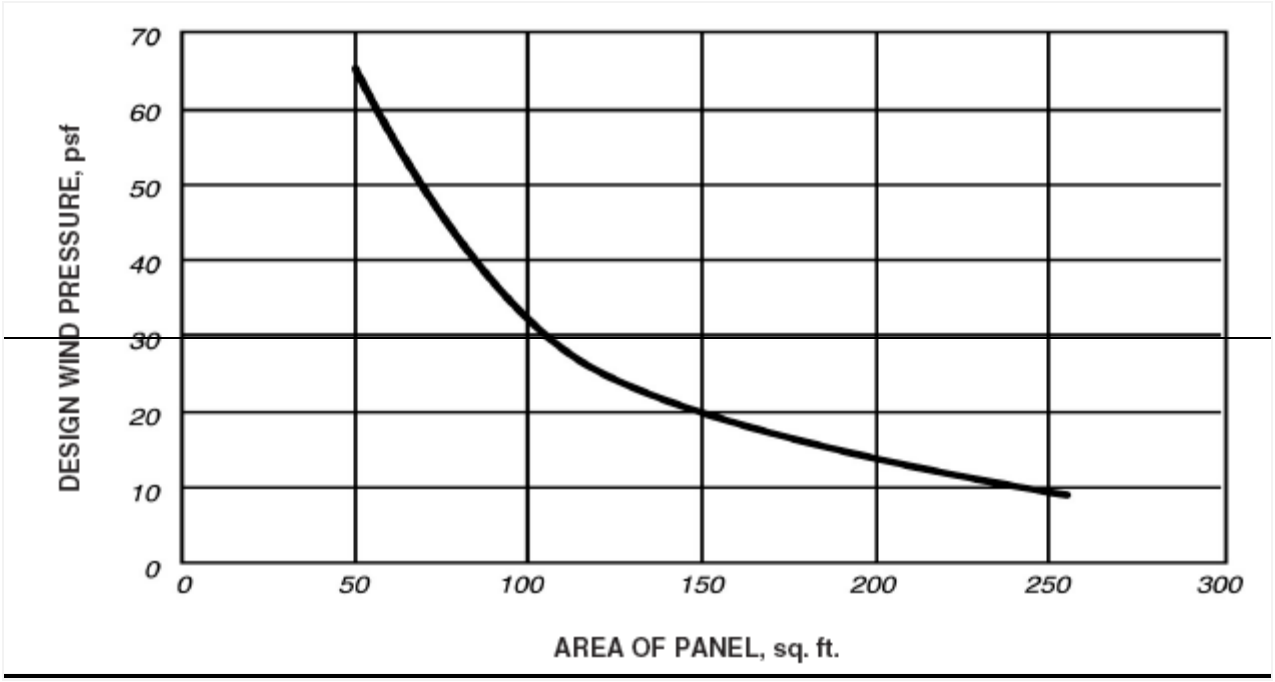

~~For SI: 1 square foot = 0.0929 m^2, 1 pound per square foot = 47.9 N/m^2.~~

~~**FIGURE 2110.3.1 - GLASS MASONRY DESIGN WIND LOAD RESISTANCE**~~

~~**2110.3.2 Exterior thin-unit panels.** The maximum area of each individual exterior thin-unit panel shall be 85 square feet (7.9 m^2). The maximum dimension between structural supports shall be 15 feet (4572 mm) in width or 10 feet (3048 mm) in height. Thin units shall not be used in applications where the design wind pressure exceeds 20 psf (958 N/m^2).~~

~~**2110.3.3 Interior panels.** The maximum area of each individual standard-unit panel shall be 250 square feet (23.2 m2). The maximum area of each thin-unit panel shall be 150 square feet (13.9 m2). The maximum dimension between structural supports shall be 25 feet (7620 mm) in width or 20 feet (6096 mm) in height.~~

~~**2110.3.4 Solid units.** The maximum area of solid glass-block wall panels in both exterior and interior walls shall not be more than 100 square feet (9.3 m2).~~

~~**2110.3.5 Curved panels.** The width of curved panels shall conform to the requirements of Sections 2110.3.1, 2110.3.2 and 2110.3.3, except additional structural supports shall be provided at locations where a curved section joins a straight section, and at inflection points in multicurved walls.~~

~~**2110.4 Support.**~~

~~**2110.4.1 General requirements.** Glass unit masonry panels shall be isolated so that in-plane loads are not imparted to the panel.~~

~~**2110.4.2 Vertical.** Maximum total deflection of structural members supporting glass unit masonry shall not exceed l/600.~~

~~**2110.4.2.1 Support on wood construction.** Glass unit masonry having an installed weight of 40 psf (195 kg/m2) or less and a maximum height of 12 feet (3658 mm) shall be permitted to be supported on wood construction.~~

~~**2110.4.2.2 Expansion joint.** A vertical expansion joint in glass unit masonry shall be provided to isolate the glass unit masonry supported by wood construction from that supported by other types of construction.~~

~~**2110.4.3 Lateral.** Glass unit masonry panels more than one unit wide or one unit high shall be laterally supported along their tops and sides. Lateral support shall be provided by panel anchors along the top and sides spaced not more than 16 inches (406 mm) o.c. or by channel-type restraints. Glass unit masonry panels shall be recessed at least 1 inch (25 mm) within channels and chases. Channel-type restraints shall be oversized to accommodate expansion material in the opening and packing and sealant between the framing restraints and the glass unit masonry perimeter units. Lateral supports for glass unit masonry panels shall be designed to resist applied loads, or a minimum of 200 pounds per lineal feet (plf) (2919 N/m) of panel, whichever is greater.~~

~~**Exceptions:**~~

~~1. Lateral support at the top of glass unit masonry panels that are no more than one unit wide shall not be required.~~

~~2. Lateral support at the sides of glass unit masonry panels that are no more than one unit high shall not be required.~~

~~**2110.4.3.1 Single unit panels.** Single unit glass unit masonry panels shall conform to the requirements of Section 2110.4.3, except lateral support shall not be provided by panel anchors.~~

~~**2110.5 Expansion joints.** Glass unit masonry panels shall be provided with expansion joints along the top and sides at structural supports. Expansion joints shall have sufficient thickness to accommodate displacements of the supporting structure, but shall not be less than $^{3}/_{8}$ inch (9.5 mm) in thickness. Expansion joints shall be entirely free of mortar or other debris and shall be filled with resilient material. The sills of glass-block panels shall be coated with approved water-based asphaltic emulsion, or other elastic waterproofing material, prior to laying the first mortar course~~.

~~**2110. 6 Mortar.** Mortar for glass unit masonry shall comply with Section 2103.8.~~

~~**2110.7 Reinforcement.** Glass unit masonry panels shall have horizontal joint reinforcement spaced not more than 16 inches (406 mm) on center, located in the mortar bed joint, and extending the entire length of the panel but not across expansion joints. Longitudinal wires shall be lapped a minimum of 6 inches (152 mm) at splices. Joint reinforcement shall be placed in the bed joint immediately below and above openings in the panel. The reinforcement shall have not less than two parallel longitudinal wires of size W1.7 (MW11), and have welded cross wires of size W1.7 (MW11).~~

SECTION 2111*A* - MASONRY FIREPLACES

2111*A*.1 Definition. A masonry fireplace is a fireplace constructed of concrete or masonry. Masonry fireplaces shall be constructed in accordance with this section.

2111*A*.2 Footings and foundations. Footings for masonry fireplaces and their chimneys shall be constructed of concrete or solid masonry at least 12 inches (305 mm) thick and shall extend at least 6 inches (153 mm) beyond the face of the fireplace or foundation wall on all sides. Footings shall be founded on natural undisturbed earth or engineered fill below frost depth. In areas not subjected to freezing, footings shall be at least 12 inches (305 mm) below finished grade.

2111A.2.1 Ash dump cleanout. Cleanout openings, located within foundation walls below fireboxes, when provided, shall be equipped with ferrous metal or masonry doors and frames constructed to remain tightly closed, except when in use. Cleanouts shall be accessible and located so that ash removal will not create a hazard to combustible materials.

2111A.3 Seismic reinforcing. Masonry or concrete fireplaces shall be constructed, anchored, supported and reinforced as required in this chapter. In Seismic Design Category D, masonry and concrete fireplaces shall be reinforced and anchored as detailed in Sections 2111A.3.1, 2111A.3.2, 2111A.4 and 2111A.4.1 for chimneys serving fireplaces. ~~In Seismic Design Category A, B or C, reinforcement and seismic anchorage is not required.~~ In Seismic Design Category E or F, masonry and concrete chimneys shall be reinforced in accordance with the requirements of Sections 2101A through 2108A.

2111A.3.1 Vertical reinforcing. For fireplaces with chimneys up to 40 inches (1016 mm) wide, four No. 4 continuous vertical bars, anchored in the foundation, shall be placed in the concrete between wythes of solid masonry or within the cells of hollow unit masonry and grouted in accordance with Section 2103A.12. For fireplaces with chimneys greater than 40 inches (1016 mm) wide, two additional No. 4 vertical bars shall be provided for each additional 40 inches (1016 mm) in width or fraction thereof.

2111A.3.2 Horizontal reinforcing. Vertical reinforcement shall be placed enclosed within $^{1}/_{4}$-inch (6.4 mm) ties or other reinforcing of equivalent net cross-sectional area, spaced not to exceed 18 inches (457 mm) on center in concrete; or placed in the bed joints of unit masonry at a minimum of every 18 inches (457 mm) of vertical height. Two such ties shall be provided at each bend in the vertical bars.

2111A.4 Seismic anchorage. Masonry and concrete chimneys in Seismic Design Category D shall be anchored at each floor, ceiling or roof line more than 6 feet (1829 mm) above grade, except where constructed completely within the exterior walls. Anchorage shall conform to the following requirements.

2111A.4.1 Anchorage. Two $^{3}/_{16}$-inch by 1-inch (4.8 mm by 25.4 mm) straps shall be embedded a minimum of 12 inches (305 mm) into the chimney. Straps shall be hooked around the outer bars and extend 6 inches (152 mm) beyond the bend. Each strap shall be fastened to a minimum of four floor joists with two $^{1}/_{2}$-inch (12.7 mm) bolts.

2111A.5 Firebox walls. Masonry fireboxes shall be constructed of solid masonry units, hollow masonry units grouted solid, stone or concrete. When a lining of firebrick at least 2 inches (51 mm) in thickness or other approved lining is provided, the minimum thickness of back and sidewalls shall each be 8 inches (203 mm) of solid masonry, including the lining. The width of joints between firebricks shall not be greater than $^{1}/_{4}$ inch (6.4 mm). When no lining is provided, the total minimum thickness of back and sidewalls shall be 10 inches (254 mm) of solid masonry. Firebrick shall conform to ASTM C 27 or ASTM C 1261 and shall be laid with medium-duty refractory mortar conforming to ASTM C 199.

2111A.5.1 Steel fireplace units. Steel fireplace units are permitted to be installed with solid masonry to form a masonry fireplace provided they are installed according to either the requirements of their listing or the requirements of this section. Steel fireplace units incorporating a steel firebox lining shall be constructed with steel not less than $^{1}/_{4}$inch (6.4 mm) in thickness, and an air-circulating chamber which is ducted to the interior of the building. The firebox lining shall be encased with solid masonry to provide a total thickness at the back and sides of not less than 8 inches (203 mm), of which not less than 4 inches (102 mm) shall be of solid masonry or concrete. Circulating air ducts employed with steel fireplace units shall be constructed of metal or masonry.

2111A.6 Firebox dimensions. The firebox of a concrete or masonry fireplace shall have a minimum depth of 20 inches (508 mm). The throat shall not be less than 8 inches (203 mm) above the fireplace opening. The throat opening shall not be less than 4 inches (102 mm) in depth. The cross-sectional area of the passageway above the firebox, including the throat, damper and smoke chamber, shall not be less than the cross-sectional area of the flue.

Exception: Rumford fireplaces shall be permitted provided that the depth of the fireplace is at least 12 inches (305 mm) and at least one-third of the width of the fireplace opening, and the throat is at least 12 inches (305 mm) above the lintel, and at least $^{1}/_{20}$ the cross-sectional area of the fireplace opening.

2111A.7 Lintel and throat. Masonry over a fireplace opening shall be supported by a lintel of noncombustible material. The minimum required bearing length on each end of the fireplace opening shall be 4 inches (102 mm). The fireplace throat or damper shall be located a minimum of 8 inches (203 mm) above the top of the fireplace opening.

2111A.7.1 Damper. Masonry fireplaces shall be equipped with a ferrous metal damper located at least 8 inches (203 mm) above the top of the fireplace opening. Dampers shall be installed in the fireplace or at the top of the flue venting the fireplace, and shall be operable from the room containing the fireplace. Damper controls shall be permitted to be located in the fireplace.

2111A.8 Smoke chamber walls. Smoke chamber walls shall be constructed of solid masonry units, hollow masonry units grouted solid, stone or concrete. Corbeling of masonry units shall not leave unit cores exposed to the inside of the smoke chamber. The inside surface of corbeled masonry shall be parged smooth. Where no lining is provided, the total minimum thickness of front, back and sidewalls shall be 8 inches (203 mm) of solid masonry. When a lining of firebrick at least 2 inches (51 mm) thick, or a lining of vitrified clay at least $^5/_8$ inch (15.9 mm) thick, is provided, the total minimum thickness of front, back and sidewalls shall be 6 inches (152 mm) of solid masonry, including the lining. Firebrick shall conform to ASTM C 27 or ASTM C 1261 and shall be laid with refractory mortar conforming to ASTM C 199.

2111A.8.1 Smoke chamber dimensions. The inside height of the smoke chamber from the fireplace throat to the beginning of the flue shall not be greater than the inside width of the fireplace opening. The inside surface of the smoke chamber shall not be inclined more than 45 degrees (0.76 rad) from vertical when prefabricated smoke chamber linings are used or when the smoke chamber walls are rolled or sloped rather than corbeled. When the inside surface of the smoke chamber is formed by corbeled masonry, the walls shall not be corbeled more than 30 degrees (0.52 rad) from vertical.

2111A.9 Hearth and hearth extension. Masonry fireplace hearths and hearth extensions shall be constructed of concrete or masonry, supported by noncombustible materials, and reinforced to carry their own weight and all imposed loads. No combustible material shall remain against the underside of hearths or hearth extensions after construction.

2111A.9.1 Hearth thickness. The minimum thickness of fireplace hearths shall be 4 inches (102 mm).

2111A.9.2 Hearth extension thickness. The minimum thickness of hearth extensions shall be 2 inches (51 mm).

Exception: When the bottom of the firebox opening is raised at least 8 inches (203 mm) above the top of the hearth extension, a hearth extension of not less than $^3/_8$-inch-thick (9.5 mm) brick, concrete, stone, tile or other approved noncombustible material is permitted.

2111A.10 Hearth extension dimensions. Hearth extensions shall extend at least 16 inches (406 mm) in front of, and at least 8 inches (203 mm) beyond, each side of the fireplace opening. Where the fireplace opening is 6 square feet (0.557 m^2) or larger, the hearth extension shall extend at least 20 inches (508 mm) in front of, and at least 12 inches (305 mm) beyond, each side of the fireplace opening.

2111A.11 Fireplace clearance. Any portion of a masonry fireplace located in the interior of a building or within the exterior wall of a building shall have a clearance to combustibles of not less than 2 inches (51 mm) from the front faces and sides of masonry fireplaces and not less than 4 inches (102 mm) from the back faces of masonry fireplaces. The airspace shall not be filled, except to provide fireblocking in accordance with Section 2111A.12.

Exceptions:

1. Masonry fireplaces listed and labeled for use in contact with combustibles in accordance with UL 127 and installed in accordance with the manufacturer's installation instructions are permitted to have combustible material in contact with their exterior surfaces.

2. When masonry fireplaces are constructed as part of masonry or concrete walls, combustible materials shall not be in contact with the masonry or concrete walls less than 12 inches (306 mm) from the inside surface of the nearest firebox lining.

3. Exposed combustible trim and the edges of sheathing materials, such as wood siding, flooring and drywall, are permitted to abut the masonry fireplace sidewalls and hearth extension, in accordance with Figure 2111A.11, provided such combustible trim or sheathing is a minimum of 12 inches (306 mm) from the inside surface of the nearest firebox lining.

4. Exposed combustible mantels or trim is permitted to be placed directly on the masonry fireplace front surrounding the fireplace opening, provided such combustible materials shall not be placed within 6 inches

(153 mm) of a fireplace opening. Combustible material directly above and within 12 inches (305 mm) of the fireplace opening shall not project more than $^{1}/_{8}$inch (3.2 mm) for each 1-inch (25 mm) distance from such opening. Combustible materials located along the sides of the fireplace opening that project more than $1^{1}/_{2}$ inches (38 mm) from the face of the fireplace shall have an additional clearance equal to the projection.

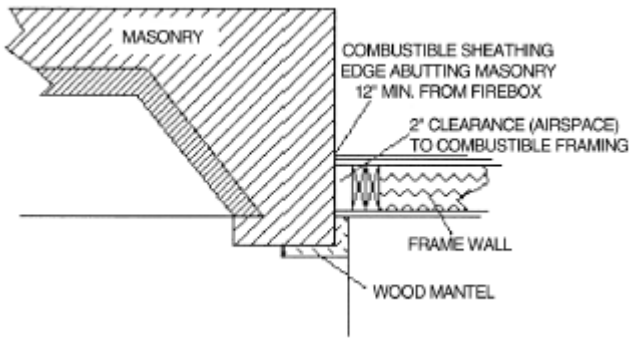

For SI: 1 inch = 25.4 mm

FIGURE 2111A.11 - ILLUSTRATION OF EXCEPTION TO FIREPLACE CLEARANCE PROVISION

2111A.12 Fireplace fireblocking. All spaces between fireplaces and floors and ceilings through which fireplaces pass shall be fireblocked with noncombustible material securely fastened in place. The fireblocking of spaces between wood joists, beams or headers shall be to a depth of 1 inch (25 mm) and shall only be placed on strips of metal or metal lath laid across the spaces between combustible material and the chimney.

2111A.13 Exterior air. Factory-built or masonry fireplaces covered in this section shall be equipped with an exterior air supply to ensure proper fuel combustion unless the room is mechanically ventilated and controlled so that the indoor pressure is neutral or positive.

2111A.13.1 Factory-built fireplaces. Exterior combustion air ducts for factory-built fireplaces shall be listed components of the fireplace, and installed according to the fireplace manufacturer's instructions.

2111A.13.2 Masonry fireplaces. Listed combustion air ducts for masonry fireplaces shall be installed according to the terms of their listing and manufacturer's instructions.

2111A.13.3 Exterior air intake. The exterior air intake shall be capable of providing all combustion air from the exterior of the dwelling. The exterior air intake shall not be located within the garage, attic, basement or crawl space of the dwelling nor shall the air intake be located at an elevation higher than the firebox. The exterior air intake shall be covered with a corrosion-resistant screen of $^{1}/_{4}$-inch (6.4 mm) mesh.

2111A.13.4 Clearance. Unlisted combustion air ducts shall be installed with a minimum 1-inch (25 mm) clearance to combustibles for all parts of the duct within 5 feet (1524 mm) of the duct outlet.

2111A.13.5 Passageway. The combustion air passageway shall be a minimum of 6 square inches (3870 mm^2) and not more than 55 square inches (0.035 m^2), except that combustion air systems for listed fireplaces or for fireplaces tested for emissions shall be constructed according to the fireplace manufacturer's instructions.

2111A.13.6 Outlet. The exterior air outlet is permitted to be located in the back or sides of the firebox chamber or within 24 inches (610 mm) of the firebox opening on or near the floor. The outlet shall be closable and designed to prevent burning material from dropping into concealed combustible spaces.

SECTION 2112*A* MASONRY HEATERS

2112*A*.1 Definition. A masonry heater is a heating appliance constructed of concrete or solid masonry, hereinafter referred to as "masonry," which is designed to absorb and store heat from a solid fuel fire built in the firebox by routing the exhaust gases through internal heat exchange channels in which the flow path downstream of the firebox may include flow in a horizontal or downward direction before entering the chimney and which delivers heat by radiation from the masonry surface of the heater.

2112*A*.2 Installation. Masonry heaters shall be installed in accordance with this section and comply with one of the following:

1. Masonry heaters shall comply with the requirements of ASTM E 1602; or

2. Masonry heaters shall be listed and labeled in accordance with UL 1482 and installed in accordance with the manufacturer's installation instructions.

2112*A*.3 Footings and foundation. The firebox floor of a masonry heater shall be a minimum thickness of 4 inches (102 mm) of noncombustible material and be supported on a noncombustible footing and foundation in accordance with Section 2113*A*.2.

2112*A*.4 Seismic reinforcing. In Seismic Design Category D, E and F, masonry heaters shall be anchored to the masonry foundation in accordance with Section 2113*A*.3. Seismic reinforcing shall not be required within the body of a masonry heater with a height that is equal to or less than 3.5 times its body width and where the masonry chimney serving the heater is not supported by the body of the heater. Where the masonry chimney shares a common wall with the facing of the masonry heater, the chimney portion of the structure shall be reinforced in accordance with Section 2113*A*.

2112*A*.5 Masonry heater clearance. Combustible materials shall not be placed within 36 inches (765 mm) of the outside surface of a masonry heater in accordance with NFPA 211, Section 8-7 (clearances for solid fuel-burning appliances), and the required space between the heater and combustible material shall be fully vented to permit the free flow of air around all heater surfaces.

Exceptions:

1. When the masonry heater wall thickness is at least 8 inches (203 mm) thick of solid masonry and the wall thickness of the heat exchange channels is at least 5 inches (127 mm) thick of solid masonry, combustible materials shall not be placed within 4 inches (102 mm) of the outside surface of a masonry heater. A clearance of at least 8 inches (203 mm) shall be provided between the gas-tight capping slab of the heater and a combustible ceiling.

2. Masonry heaters listed and labeled in accordance with UL 1482 and installed in accordance with the manufacturer's instructions.

SECTION 2113*A* - MASONRY CHIMNEYS

2113*A*.1 Definition. A masonry chimney is a chimney constructed of concrete or masonry, hereinafter referred to as "masonry." Masonry chimneys shall be constructed, anchored, supported and reinforced as required in this chapter.

2113*A*.2 Footings and foundations. Footings for masonry chimneys shall be constructed of concrete or solid masonry at least 12 inches (305 mm) thick and shall extend at least 6 inches (152 mm) beyond the face of the foundation or support wall on all sides. Footings shall be founded on natural undisturbed earth or engineered fill below frost depth. In areas not subjected to freezing, footings shall be at least 12 inches (305 mm) below finished grade.

2113*A*.3 Seismic reinforcing. Masonry or concrete chimneys shall be constructed, anchored, supported and reinforced as required in this chapter. In Seismic Design Category D, masonry and concrete chimneys shall be reinforced and anchored as detailed in Sections 2113*A*.3.1, 2113*A*.3.2 and 2113*A*.4. ~~In Seismic Design Category A, B or C, reinforcement and seismic anchorage is not required.~~ In Seismic Design Category E or F, masonry and concrete chimneys shall be reinforced in accordance with the requirements of Sections 2101*A* through 2108*A*.

2113*A*.3.1 Vertical reinforcing. For chimneys up to 40 inches (1016 mm) wide, four No. 4 continuous vertical bars anchored in the foundation shall be placed in the concrete between wythes of solid masonry or within the cells of hollow unit masonry and grouted in accordance with Section 2103*A*.12. Grout shall be prevented from

bonding with the flue liner so that the flue liner is free to move with thermal expansion. For chimneys greater than 40 inches (1016 mm) wide, two additional No. 4 vertical bars shall be provided for each additional 40 inches (1016 mm) in width or fraction thereof.

2113*A*.3.2 Horizontal reinforcing. Vertical reinforcement shall be placed enclosed within $^{1}/_{4}$-inch (6.4 mm) ties, or other reinforcing of equivalent net cross-sectional area, spaced not to exceed 18 inches (457 mm) o.c. in concrete, or placed in the bed joints of unit masonry, at a minimum of every 18 inches (457 mm) of vertical height. Two such ties shall be provided at each bend in the vertical bars.

2113*A*.4 Seismic anchorage. Masonry and concrete chimneys and foundations in Seismic Design Category D shall be anchored at each floor, ceiling or roof line more than 6 feet (1829 mm) above grade, except where constructed completely within the exterior walls. Anchorage shall conform to the following requirements.

2113*A*.4.1 Anchorage. Two $^{3}/_{16}$-inch by 1-inch (4.8 mm by 25 mm) straps shall be embedded a minimum of 12 inches (305 mm) into the chimney. Straps shall be hooked around the outer bars and extend 6 inches (152 mm) beyond the bend. Each strap shall be fastened to a minimum of four floor joists with two $^{1}/_{2}$-inch (12.7 mm) bolts.

2113*A*.5 Corbeling. ~~Masonry chimneys shall not be corbeled more than half of the chimney's wall thickness from a wall or foundation, nor shall a chimney be corbeled from a wall or foundation that is less than 12 inches (305 mm) in thickness unless it projects equally on each side of the wall, except that on the second story of a two-story dwelling, corbeling of chimneys on the exterior of the enclosing walls is permitted to equal the wall thickness. The projection of a single course shall not exceed one-half the unit height or one-third of the unit bed depth, whichever is less.~~

(*Relocated from 2104A.4.5, 2001 CBC*) *Corbelling for masonry chimney shall be as required per Section 2104A.4.2.*

2113*A*.6 Changes in dimension. The chimney wall or chimney flue lining shall not change in size or shape within 6 inches (152 mm) above or below where the chimney passes through floor components, ceiling components or roof components.

2113*A*.7 Offsets. Where a masonry chimney is constructed with a fireclay flue liner surrounded by one wythe of masonry, the maximum offset shall be such that the centerline of the flue above the offset does not extend beyond the center of the chimney wall below the offset. Where the chimney offset is supported by masonry below the offset in an approved manner, the maximum offset limitations shall not apply. Each individual corbeled masonry course of the offset shall not exceed the projection limitations specified in Section 2113*A*.5.

2113*A*.8 Additional load. Chimneys shall not support loads other than their own weight unless they are designed and constructed to support the additional load. Masonry chimneys are permitted to be constructed as part of the masonry walls or concrete walls of the building.

2113*A*.9 Termination. Chimneys shall extend at least 2 feet (610 mm) higher than any portion of the building within 10 feet (3048 mm), but shall not be less than 3 feet (914 mm) above the highest point where the chimney passes through the roof.

2113*A*.9.1 Spark arrestors. Where a spark arrestor is installed on a masonry chimney, the spark arrestor shall meet all of the following requirements:

1. The net free area of the arrestor shall not be less than four times the net free area of the outlet of the chimney flue it serves.

2. The arrestor screen shall have heat and corrosion resistance equivalent to 19-gage galvanized steel or 24-gage stainless steel.

3. Openings shall not permit the passage of spheres having a diameter greater than $^{1}/_{2}$ inch (13 mm) nor block the passage of spheres having a diameter less than $^{3}/_{8}$ inch (11 mm).

4. The spark arrestor shall be accessible for cleaning and the screen or chimney cap shall be removable to allow for cleaning of the chimney flue.

2113*A*.10 Wall thickness. Masonry chimney walls shall be constructed of concrete, solid masonry units or hollow masonry units grouted solid with not less than 4 inches (102 mm) nominal thickness.

2113A.10.1 Masonry veneer chimneys. Where masonry is used as veneer for a framed chimney, through flashing and weep holes shall be provided as required by Chapter 14.

2113A.11 Flue lining (material). Masonry chimneys shall be lined. The lining material shall be appropriate for the type of appliance connected, according to the terms of the appliance listing and the manufacturer's instructions.

2113A.11.1 Residential-type appliances (general). Flue lining systems shall comply with one of the following:

1. Clay flue lining complying with the requirements of ASTM C 315, or equivalent.

2. Listed chimney lining systems complying with UL 1777.

3. Factory-built chimneys or chimney units listed for installation within masonry chimneys.

4. Other approved materials that will resist corrosion, erosion, softening or cracking from flue gases and condensate at temperatures up to 1,800°F (982°C).

2113A.11.1.1 Flue linings for specific appliances. Flue linings other than those covered in Section 2113A.11.1 intended for use with specific appliances shall comply with Sections 2113A.11.1.2 through 2113A.11.1.4 and Sections 2113A.11.2 and 2113A.11.3.

2113A.11.1.2 Gas appliances. Flue lining systems for gas appliances shall be in accordance with the ~~*International Fuel Gas*~~ *California Mechanical Code*.

2113A.11.1.3 Pellet fuel-burning appliances. Flue lining and vent systems for use in masonry chimneys with pellet fuel-burning appliances shall be limited to flue lining systems complying with Section 2113A.11.1 and pellet vents listed for installation within masonry chimneys (see Section 2113A.11.1.5 for marking).

2113A.11.1.4 Oil-fired appliances approved for use with L-vent. Flue lining and vent systems for use in masonry chimneys with oil-fired appliances approved for use with Type L vent shall be limited to flue lining systems complying with Section 2113A.11.1 and listed chimney liners complying with UL 641 (see Section 2113A.11.1.5 for marking).

2113A.11.1.5 Notice of usage. When a flue is relined with a material not complying with Section 2113A.11.1, the chimney shall be plainly and permanently identified by a label attached to a wall, ceiling or other conspicuous location adjacent to where the connector enters the chimney. The label shall include the following message or equivalent language: "This chimney is for use only with (type or category of appliance) that burns (type of fuel). Do not connect other types of appliances."

2113A.11.2 Concrete and masonry chimneys for medium-heat appliances.

2113A.11.2.1 General. Concrete and masonry chimneys for medium-heat appliances shall comply with Sections 2113A.1 through 2113A.5.

2113A.11.2.2 Construction. Chimneys for medium-heat appliances shall be constructed of solid masonry units or of concrete with walls a minimum of 8 inches (203 mm) thick, or with stone masonry a minimum of 12 inches (305 mm) thick.

2113A.11.2.3 Lining. Concrete and masonry chimneys shall be lined with an approved medium-duty refractory brick a minimum of $4^1/_2$inches (114 mm) thick laid on the $4^1/_2$-inch bed (114 mm) in an approved medium-duty refractory mortar. The lining shall start 2 feet (610 mm) or more below the lowest chimney connector entrance. Chimneys terminating 25 feet (7620 mm) or less above a chimney connector entrance shall be lined to the top.

2113A.11.2.4 Multiple passageway. Concrete and masonry chimneys containing more than one passageway shall have the liners separated by a minimum 4-inch-thick (102 mm) concrete or solid masonry wall.

2113A.11.2.5 Termination height. Concrete and masonry chimneys for medium-heat appliances shall extend a minimum of 10 feet (3048 mm) higher than any portion of any building within 25 feet (7620 mm).

2113A.11.2.6 Clearance. A minimum clearance of 4 inches (102 mm) shall be rovided between the exterior surfaces of a concrete or masonry chimney for medium-heat appliances and combustible material.

2113*A*.11.3 Concrete and masonry chimneys for high-heat appliances.

2113*A*.11.3.1 General. Concrete and masonry chimneys for high-heat appliances shall comply with Sections 2113*A*.1 through 2113*A*.5.

2113*A*.11.3.2 Construction. Chimneys for high-heat appliances shall be constructed with double walls of solid masonry units or of concrete, each wall to be a minimum of 8 inches (203 mm) thick with a minimum airspace of 2 inches (51 mm) between the walls.

2113*A*.11.3.3 Lining. The inside of the interior wall shall be lined with an approved high-duty refractory brick, a minimum of $4^1/_2$inches (114 mm) thick laid on the $4^1/_2$-inch bed (114 mm) in an approved high-duty refractory mortar. The lining shall start at the base of the chimney and extend continuously to the top.

2113*A*.11.3.4 Termination height. Concrete and masonry chimneys for high-heat appliances shall extend a minimum of 20 feet (6096 mm) higher than any portion of any building within 50 feet (15 240 mm).

2113*A*.11.3.5 Clearance. Concrete and masonry chimneys for high-heat appliances shall have approved clearance from buildings and structures to prevent overheating combustible materials, permit inspection and maintenance operations on the chimney and prevent danger of burns to persons.

2113*A*.12 Clay flue lining (installation). Clay flue liners shall be installed in accordance with ASTM C 1283 and extend from a point not less than 8 inches (203 mm) below the lowest inlet or, in the case of fireplaces, from the top of the smoke chamber to a point above the enclosing walls. The lining shall be carried up vertically, with a maximum slope no greater than 30 degrees (0.52 rad) from the vertical.

Clay flue liners shall be laid in medium-duty refractory mortar conforming to ASTM C 199 with tight mortar joints left smooth on the inside and installed to maintain an air space or insulation not to exceed the thickness of the flue liner separating the flue liners from the interior face of the chimney masonry walls. Flue lining shall be supported on all sides. Only enough mortar shall be placed to make the joint and hold the liners in position.

2113*A*.13 Additional requirements.

2113*A*.13.1 Listed materials. Listed materials used as flue linings shall be installed in accordance with the terms of their listings and the manufacturer's instructions.

2113*A*.13.2 Space around lining. The space surrounding a chimney lining system or vent installed within a masonry chimney shall not be used to vent any other appliance.

Exception: This shall not prevent the installation of a separate flue lining in accordance with the manufacturer's instructions.

2113*A*.14 Multiple flues. When two or more flues are located in the same chimney, masonry wythes shall be built between adjacent flue linings. The masonry wythes shall be at least 4 inches (102 mm) thick and bonded into the walls of the chimney.

Exception: When venting only one appliance, two flues are permitted to adjoin each other in the same chimney with only the flue lining separation between them. The joints of the adjacent flue linings shall be staggered at least 4 inches (102 mm).

2113*A*.15 Flue area (appliance). Chimney flues shall not be smaller in area than the area of the connector from the appliance. Chimney flues connected to more than one appliance shall not be less than the area of the largest connector plus 50 percent of the areas of additional chimney connectors.

Exceptions:

1. Chimney flues serving oil-fired appliances sized in accordance with NFPA 31.

2. Chimney flues serving gas-fired appliances sized in accordance with the ~~*International Fuel Gas*~~ *California Mechanical* *Code*.

2113*A*.16 Flue area (masonry fireplace). Flue sizing for chimneys serving fireplaces shall be in accordance with Section 2113*A*.16.1 or 2113*A*.16.2.

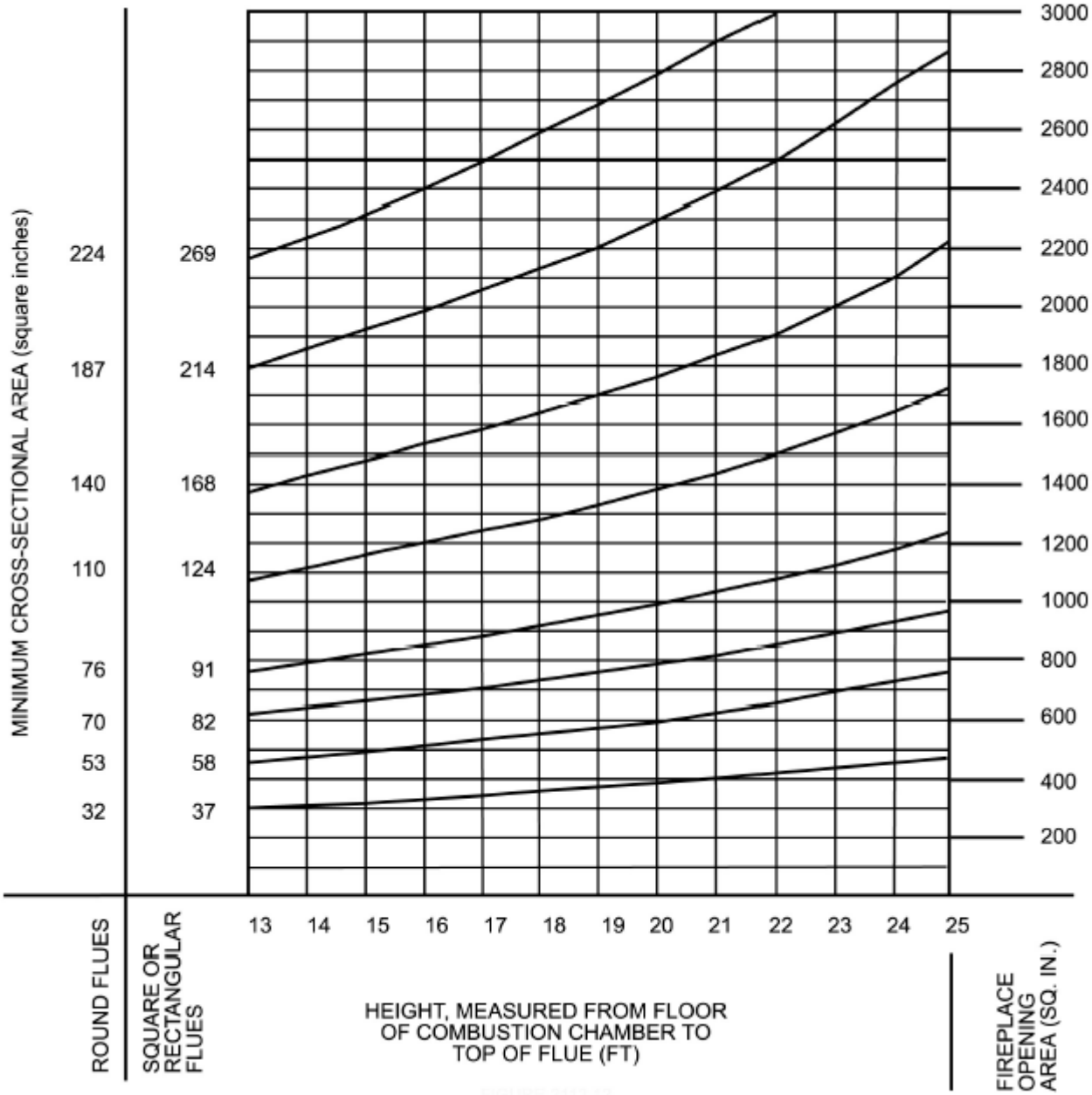

For SI: 1 inch = 25.4 mm, 1 square inch = 645 mm^2.

FIGURE 2113*A*.16 - FLUE SIZES FOR MASONRY CHIMNEYS

TABLE 2113A.16(1) - NET CROSS-SECTIONAL AREA OF ROUND FLUE SIZES[a]

FLUE SIZE, INSIDE DIAMETER (inches)	CROSS-SECTIONAL AREA (square inches)
6	28
7	38
8	50
10	78
$10^3/_4$	90
12	113
15	176
18	254

For SI: 1 inch = 25.4 mm, 1 square inch = 645.16 mm^2.

a. Flue sizes are based on ASTM C 315.

TABLE 2113A.16(2) - NET CROSS-SECTIONAL AREA OF SQUARE AND RECTANGULAR FLUE SIZES

FLUE SIZE, OUTSIDE NOMINAL DIMENSIONS (inches)	CROSS-SECTIONAL AREA (square inches)
4.5 x 8.5	23
4.5 x 13	34
8 x 8	42
8.5 x 8.5	49
8 x 12	67
8.5 x 13	76
12 x 12	102
8.5 x 18	101
13 x 13	127
12 x 16	131
13 x 18	173
16 x 16	181
16 x 20	222
18 x 18	233
20 x 20	298
20 x 24	335
24 x 24	431

For SI: 1 inch = 25.4 mm, 1 square inch = 645.16 mm^2.

2113A.16.1 Minimum area. Round chimney flues shall have a minimum net cross-sectional area of at least $^1/_{12}$ of the fireplace opening. Square chimney flues shall have a minimum net cross-sectional area of at least $^1/_{10}$of the fireplace opening. Rectangular chimney flues with an aspect ratio less than 2 to 1 shall have a minimum net cross-sectional area of at least $^1/_{10}$of the fireplace opening. Rectangular chimney flues with an aspect ratio of 2 to 1 or more shall have a minimum net cross-sectional area of at least $^1/_8$ of the fireplace opening.

2113A.16.2 Determination of minimum area. The minimum net cross-sectional area of the flue shall be determined in accordance with Figure 2113A.16. A flue size providing at least the equivalent net cross-sectional area shall be used. Cross-sectional areas of clay flue linings are as provided in Tables 2113A.16(1) and 2113A.16(2) or as provided by the manufacturer or as measured in the field. The height of the chimney shall be measured from the firebox floor to the top of the chimney flue.

2113A.17 Inlet. Inlets to masonry chimneys shall enter from the side. Inlets shall have a thimble of fireclay, rigid refractory material or metal that will prevent the connector from pulling out of the inlet or from extending beyond the wall of the liner.

2113A.18 Masonry chimney cleanout openings. Cleanout openings shall be provided within 6 inches (152 mm) of the base of each flue within every masonry chimney. The upper edge of the cleanout shall be located at least 6 inches (152 mm) below the lowest chimney inlet opening. The height of the opening shall be at least 6 inches (152 mm). The cleanout shall be provided with a noncombustible cover.

Exception: Chimney flues serving masonry fireplaces, where cleaning is possible through the fireplace opening.

2113A.19 Chimney clearances. Any portion of a masonry chimney located in the interior of the building or within the exterior wall of the building shall have a minimum airspace clearance to combustibles of 2 inches (51 mm). Chimneys located entirely outside the exterior walls of the building, including chimneys that pass through the soffit or cornice, shall have a minimum airspace clearance of 1 inch (25 mm). The airspace shall not be filled, except to provide fireblocking in accordance with Section 2113A.20.

Exceptions:

1. Masonry chimneys equipped with a chimney lining system listed and labeled for use in chimneys in contact with combustibles in accordance with UL 1777, and installed in accordance with the manufacturer's instructions, are permitted to have combustible material in contact with their exterior surfaces.

2. Where masonry chimneys are constructed as part of masonry or concrete walls, combustible materials shall not be in contact with the masonry or concrete wall less than 12 inches (305 mm) from the inside surface of the nearest flue lining.

3. Exposed combustible trim and the edges of sheathing materials, such as wood siding, are permitted to abut the masonry chimney sidewalls, in accordance with Figure

2113A.19, provided such combustible trim or sheathing is a minimum of 12 inches (305 mm) from the inside surface of the nearest flue lining. Combustible material and trim shall not overlap the corners of the chimney by more than 1 inch (25 mm).

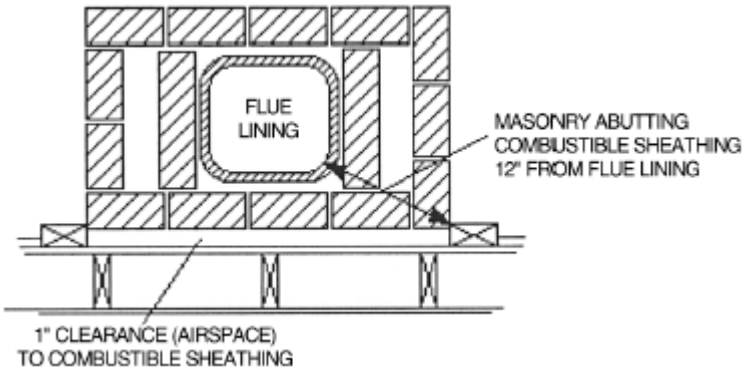

For SI: 1 inch = 25.4 mm.

FIGURE 2113*A*.19 - ILLUSTRATION OF EXCEPTION THREE CHIMNEY CLEARANCE PROVISION

2113*A*.20 Chimney fireblocking. All spaces between chimneys and floors and ceilings through which chimneys pass shall be fireblocked with noncombustible material securely fastened in place. The fireblocking of spaces between wood joists, beams or headers shall be to a depth of 1 inch (25 mm) and shall only be placed on strips of metal or metal lath laid across the spaces between combustible material and the chimney.

SECTION 2114A - *(Relocated from 2112A, 2001 CBC)* ***NONBEARING WALLS***

2114A.1 General. *All nonbearing masonry walls shall be reinforced as specified in Section ~~2106A.1.12.4~~ 2106A.5.3.1. Fences and interior nonbearing nonshear walls may be of hollow-unit masonry construction grouted in cells containing vertical and horizontal reinforcement. Nonbearing walls may be used to carry a superimposed load of not more than 200 pounds per linear foot (2.92 kN/m).*

1. ***Thickness.*** *Every nonbearing masonry wall shall be so constructed and have a sufficient thickness to withstand all vertical loads and horizontal loads, but in no case shall the thickness of such walls be less than the values set forth in Table ~~21A-R~~ 2107A.9.*

   Plaster shall not be considered as contributing to the thickness of a wall in computing the height-to-thickness ratio.

2. ***Anchorage.*** *All nonbearing walls shall be anchored as required by Sections ~~1611A and 1633A.2.8~~ 1604A and ASCE 7 Chapter 13. Suspended ceilings or other nonstructural elements shall not be used to provide anchorage for masonry walls.*

SECTION 2115A - *(Relocated from 2113A, 2001 CBC)* ***MASONRY SCREEN WALLS***

2115A.1 General. *Masonry units may be used in nonbearing decorative screen walls. Units may be laid up in panels with units on edge with the open pattern of the unit exposed in the completed wall.*

1. ***Horizontal Forces.*** *The panels shall be capable of spanning between supports to resist the horizontal forces specified in Chapter 16A. Wind loads shall be based on gross projected area of the block.*

2. ***Mortar Joints.*** *Horizontal and vertical joints shall not be less than 1/4 inch (6 mm) thick. All joints shall be completely filled with mortar and shall be "shoved joint" work. The units of a panel shall be so arranged that either the horizontal or the vertical joint containing reinforcing is continuous without*

offset. This continuous joint shall be reinforced with a minimum of 0.03 square inch (19 mm^2) of reinforcing steel. Reinforcement may be embedded in mortar.

3. ***Reinforcing.*** *Joint reinforcing may be composed of two wires made with welded ladder or trussed wire cross ties. In calculating the resisting capacity of the system, compression and tension in the spaced wires may be utilized. Ladder wire reinforcing shall not be spliced and shall be the widest that the mortar joint will accommodate, allowing 1/2 inch (13 mm) of mortar cover.*

4. ***Size of Panels.*** *The maximum size of panels shall be 144 square feet (13.4 m^2), with the maximum dimension in either direction of 15 feet (4572 mm).*

5. ***Panel Support.*** *Each panel shall be supported on all edges by a structural member of concrete, masonry or steel. Supports at the top and ends of the panel shall be by means of confinement of the masonry by at least 1/2 inch (13 mm) into and between the flanges of a steel channel. The space between the end of the panel and the web of the channel shall be filled with resilient material. The use of equivalent configuration in other steel section or in masonry or concrete is acceptable.*

Notation [For DSA-SS]:
Authority: Education Code Sections 17310, 81142; Health & Safety Code Section 16022
Reference(s): Education Code Sections 17280 - 17317, and 811130 - 81149; Health & Safety Code Sections 16000 – 16023

Notation [For OSHPD]:
Authority: Health and Safety Code Section 129850
Reference: Health and Safety Code Sections 1275, 129850 and 129790

CHAPTER 22 - STEEL

2001 CBC	PROPOSED ADOPTION	OSHPD		Comments
		2	3	
	Adopt entire chapter without amendments	X	X	
	Adopt entire chapter with amendments listed below			
	Adopt only those sections listed below			

EXPRESS TERMS

(This chapter is adopted without any amendments)

Notation [For OSHPD]:
Authority: Health and Safety Code Section 129850
Reference: Health and Safety Code Sections 1275 and 129850

Chapter 22*A* – Steel

2001 CBC	PROPOSED ADOPTION	OSHPD		DSA-SS	Comments
		1	4		
	Adopt entire chapter without amendments				
	Adopt entire chapter with amendments listed below	X	X	X	
	Adopt only those sections listed below				
	2201A.1.1 CA	X	X	X	
	2201A.1.2 CA	X	X	X	
2205A.10.2 CA	*2204A.1.1 CA*	X	X	X	Relocated existing California Building Standards into IBC format
2205A.13 CA	*2204A.1.2 CA*	X	X	X	Relocated existing California Building Standards into IBC format
2205A.12 CA	*2204A.2.2 CA*	X	X	X	Relocated existing California Building Standards into IBC format
2209A.4 CA	*2205A.1.1 CA*	X	X	X	Relocated existing California Building Standards into IBC format
	2205A.2	X	X	X	
	2205A.3.1	X	X	X	
	2205A.4	X	X		
2211A.4	*2205A.4.1.1.1 CA*	X	X		Relocated existing California Building Standards into IBC format
2211A.5 CA	*2205A.4.1.2 CA*	X	X		Relocated existing California Building Standards into IBC format
2211A.6 CA	*2205A.4.1.3 CA*	X	X		Relocated existing California Building Standards into IBC format
2211A.7 CA	*2205A.4.1.4 CA*	X	X		Relocated existing California Building Standards into IBC format
2211A.9 CA	*2205A.4.2.1 CA*	X	X		Relocated existing California Building Standards into IBC format
2211A.1 CA	*2205A.4.2.2 CA*	X	X		Relocated existing California Building Standards into IBC format
2211A.10 CA	*2205A.4.2.3 CA*	X	X		Relocated existing California Building Standards into IBC format

2211A.12 CA	*2205A.4.2.4 CA*	X	X		Relocated existing California Building Standards into IBC format
	2205A.5	X	X		
	2206A.4	X	X	X	
2205A.7.1 CA	*2206A.6 CA*	X	X	X	Relocated existing California Building Standards into IBC format
2205A.4.1 CA	*2209A.3 CA*	X	X	X	Relocated existing California Building Standards into IBC format
	2210A.3	X	X	X	
2219A.2 CA	*2210A.5 CA*	X	X	X	Relocated existing California Building Standards into IBC format
	2210A.6	X	X	X	
	2211A CA			X	
2231 CA	*2212A CA*	X	X	X	Relocated existing California Building Standards into IBC format
2231A.2 CA	*221A.2 CA*	X	X	X	Relocated existing California Building Standards into IBC format
2231A.3 CA	*2212A.3 CA*	X	X	X	Relocated existing California Building Standards into IBC format
2231A.7 CA	*2212A.4*	X	X	X	Relocated existing California Building Standards into IBC format
2231A.8 CA	*2212A.5 CA*	X	X	X	Relocated existing California Building Standards into IBC format

REPEAL OF EXISTING CALIFORNIA AMENDMENTS IN PART OR IN WHOLE THAT ARE NO LONGER NECESSARY AS FOLLOWS:

2001 CBC DIVISION I – GENERAL

~~2001 CBC SECTION 2202A – STANDARDS OF QUALITY:~~ Repeal all amendments in this section.

2001 CBC SECTION 2205A – DESIGN AND CONSTRUCTION PROVISIONS: Repeal all amendments in following subsections.

~~2205A.8, 2205A.8.1~~ and 2205A.~~10.1~~.

2001 CBC DIVISION II – DESIGN STANDARD FOR LOAD AND RESISTANCE FACTOR DESIGN SPECIFICATION FOR STRUCTURAL STEEL BUILDING

~~2001 CBC SECTION 2206A – ADOPTION:~~ Repeal all amendments in this section.

~~2001 CBC SECTION 2207A – AMENDMENTS:~~ Repeal all amendments in this section.

2001 CBC DIVISION III – DESIGN STANDARD FOR SPECIFICATION FOR STRUCTURAL STEEL BUILDINGS, ALLOWABLE STRESS DESIGN

~~2001 CBC SECTION 2208A – ADOPTION:~~ Repeal all amendments in this section.

2001 CBC SECTION 2209A – AMENDMENTS: Repeal all amendment in the following subsection.

~~*2209A.5*~~

~~2001 CBC DIVISION IV – SEISMIC PROVISION FOR STRUCTURAL STEEL BUILDINGS:~~ Repeal all amendments in this Division.

~~2001 CBC DIVISION V – SEISMIC PROVISIONS FOR STRUCTURAL STEEL BUILDINGS FOR USE WITH ALLOWABLE STRESS DESIGN:~~ Repeal all amendments in this Division.

~~2001 CBC DIVISION VI – LOAD AND RESISTANCE FACTOR DESIGN FOR COLD FORMED STRUCTURAL STEEL MEMBERS:~~ Repeal all amendments in this Division.

~~2001 CBC DIVISION VII – SPECIFICICATION FOR DESIGN OF COLD FORMED STRUCTURAL STEEL MEMBERS:~~ Repeal all amendments in this Division.

~~2001 CBC DIVISION VIII – LATERAL RESISTANCE FOR STEEL STUD WALL SYSTEMS:~~ Repeal all amendments in this Division.

2001 CBC TABLES – Repeal all amendments in following tables.

~~*Tables 22A-VIII-A, 22A-VIII-B*~~ *and* ~~*22A-VIII-C*~~

EXPRESS TERMS

SECTION 2201*A* - GENERAL

2201*A*.1 Scope. The provisions of this chapter govern the quality, design, fabrication and erection of steel used structurally in buildings or structures.

2201A.1.1 Application *The scope of application of Chapter 22A is as follows:*

1. Structures regulated by the Division of the State Architect-Structural Safety (DSA-SS), which include those applications listed in Section 109.2 These applications include public elementary and secondary schools, community colleges and state-owned or state-leased essential services buildings

2. Structures regulated by the Office of Statewide Health Planning and Development (OSHPD), which include those applications listed in Section 110.1, and 110.4.These applications include hospitals, skilled nursing facilities, intermediate care facilities and correctional treatment centers.

Exception *[For OSHPD 2]**:** Single-story Type V skilled nursing or intermediate care facilities utilizing wood-frame or light-steel-frame construction as defined in Health and Safety Code Section 129725, which shall comply with CBC Chapter 22 and any applicable amendments therein*

2201A.1.2 Identification of amendments. *DSA - SS and OSHPD adopt this chapter and all amendments.*

Exception: *Amendments adopted by only one agency appear in this chapter preceded with the appropriate acronym of the adopting agency, as follows:*

1. *Division of the State Architect - Structural Safety:*

[DSA-SS] - *For applications listed in Section 109.2*

2. *Office of Statewide Health Planning and Development:*

[OSHPD 1] *- For applications listed in Section 110.1*

[OSHPD 4] *- For applications listed in Section 110.4*

SECTION 2202*A* - DEFINITIONS

2202*A*.1 Definitions. The following words and terms shall, for the purposes of this chapter and as used elsewhere in this code, have the meaning shown herein.

STEEL CONSTRUCTION, COLD-FORMED. That type of construction made up entirely or in part of steel structural members cold formed to shape from sheet or strip steel such as roof deck, floor and wall panels, studs, floor joists, roof joists and other structural elements.

STEEL JOIST. Any steel structural member of a building or structure made of hot-rolled or cold-formed solid or open-web sections, or riveted or welded bars, strip or sheet steel members, or slotted and expanded, or otherwise deformed rolled sections.

STEEL MEMBER, STRUCTURAL. Any steel structural member of a building or structure consisting of a rolled steel structural shape other than cold-formed steel, or steel joist members.

SECTION 2203*A* - IDENTIFICATION AND PROTECTION OF STEEL FOR STRUCTURAL PURPOSES

2203*A*.1 Identification. Steel furnished for structural load-carrying purposes shall be properly identified for conformity to the ordered grade in accordance with the specified ASTM standard or other specification and the provisions of this chapter. Steel that is not readily identifiable as to grade from marking and test records shall be tested to determine conformity to such standards.

2203*A*.2 Protection. Painting of structural steel shall comply with the requirements contained in AISC 360. Individual structural members and assembled panels of cold-formed steel construction, except where fabricated of approved corrosion-resistant steel or of steel having a corrosion-resistant or other approved coating, shall be protected against corrosion with an approved coat of paint, enamel or other approved protection.

SECTION 2204 *A* - CONNECTIONS

2204*A*.1 Welding. The details of design, workmanship and technique for welding, inspection of welding and qualification of welding operators shall conform to the requirements of the specifications listed in Sections 2205*A*, 2206*A*, 2207*A*, 2209*A*, and 2210*A*. Special inspection of welding shall be provided where required by Section 1704*A*.

2204A.1.1 *(Relocated from 2205A.10.2, 2001 CBC)* ***Welded Splice.*** *No welded splices shall be made except those shown on approved plans.*

2204A.1.2 *(Relocated from 2205A.13, 2001 CBC)* ***Welded Shear Connectors.*** *When welded shear connectors are used for applications other than composite construction, such as for transfer of shear loads to ledgers, ~~drag ties~~ collectors and diaphragm chord members, ~~the allowable shear loads shall be one third of the tabulated values.~~ the allowable shear strength or design shear strength as appropriate, shall be one third of available strength. For installations where connectors are applied through formed steel decks and are used for transfer of shear loads other than for composite construction, the allowable ~~shear loads~~ shear strength or design shear strength as appropriate shall be one third the ~~tabulated value~~ available strength multiplied by the appropriate reduction factor ~~given in Division IX~~ as required per Section 2206A.*

Exceptions:

1. *Where the required shear strength is determined using load combinations with overstrength factors per ASCE 7 Section 12.4.3.2, the connector shear strength need not be reduced to one third the available strength.*

2. *The allowable or design shear strength of welded connectors given in code evaluation reports for concrete over formed steel decks for purposes of transferring diaphragm shear may be used without reduction subject to the acceptance of the enforcement agency.*

2204*A*.2 Bolting. The design, installation and inspection of bolts shall be in accordance with the requirements of the specifications listed in Sections 2205*A*, 2206*A*, 2209*A*, and 2210*A*. Special inspection of the installation of high-strength bolts shall be provided where required by Section 1704*A*.

2204*A*.2.1 Anchor rods. Anchor rods shall be set accurately to the pattern and dimensions called for on the plans. The protrusion of the threaded ends through the connected material shall be sufficient to fully engage the threads of the nuts, but shall not be greater than the length of the threads on the bolts.

2204A.2.2 *(Relocated from 2205A.12, 2001 CBC)* ***Column Base Plate.*** *When shear and / or tensile forces are intended to be transferred between column base plates and anchor bolts, provision shall be made in the design to eliminate the effects of oversized holes permitted in base plates by ~~Division I, Section 2205A.11 * * *~~ AISC 360 by use of shear lugs and / or welded shear transfer plates or other means acceptable to the enforcement agency, when the oversized holes are larger than the anchor bolt by more than 1/8 inch (3.2 mm). When welded shear transfer plates and shear lugs or other means acceptable to the enforcement agency are not used, the anchor bolts shall be checked for the induced bending stresses in combination with the shear stresses. ~~using Formula 12A-1 as follows:~~*

~~$f_v/F_v+f_b/F_b \leq 1.0$ (12A-1)~~

SECTION 2205*A* STRUCTURAL STEEL

2205*A*.1 General. The design, fabrication and erection of structural steel for buildings and structures shall be in accordance with AISC 360. Where required, the seismic design of steel structures shall be in accordance with the additional provisions of Section 2205*A*.2.

2205A.1.1 Modify AISC 360 Section J1.8 by adding the following:

(Relocated from 2209A.4, 2001 CBC) ~~***Bolts in Combination with Welds.*** *In new work, A307 bolts or high-strength bolts used in bearing-type connections shall not be considered as sharing the stress in combinations with welds.*~~ *The welds shall be made before the bolts are tensioned.* ~~*Welds, if used, shall be provided to carry the entire stress in the connection. High-strength bolts proportioned for slip-critical connections may be considered as sharing the stress with the welds.*~~

~~*In making welding alterations to structures, existing rivets and high-strength bolts tightened to the requirements for slip-critical connections are permitted for carrying stresses resulting from loads present at the time of alteration, and the welding need be adequate to carry only the additional stress.*~~

2205*A*.2 Seismic requirements for steel structures. The design of structural steel structures to resist seismic forces shall be in accordance with the provisions of ~~Section 2205.2.1 or~~ 2205*A*.2.2 for the appropriate seismic design category.

2205*A*.2.1 Seismic Design Category A, B or C. - *Not permitted by OSHPD and DSA-SS*. ~~Structural steel structures assigned to Seismic Design Category A, B or C shall be of any construction permitted in Section 2205. An *R* factor as set forth in Section 12.2.1 of ASCE 7 for the appropriate steel system is permitted where the structure is designed and detailed in accordance with the provisions of AISC 341, Part I. Systems not detailed in accordance with the above shall use the *R* factor in Section 12.2.1 of ASCE 7 designated for "structural steel systems not specifically detailed for seismic resistance.~~"

2205*A*.2.2 Seismic Design Category D, E or F. Structural steel structures assigned to Seismic Design Category D, E or F shall be designed and detailed in accordance with AISC 341, Part I *irrespective of R values, unless approved otherwise by the enforcement agency.*

2205*A*.3 Seismic requirements for composite construction. The design, construction and quality of composite steel and concrete components that resist seismic forces shall conform to the requirements of the AISC 360 and ACI 318. An *R* factor as set forth in Section 12.2.1 of ASCE 7 for the appropriate composite steel and concrete system is permitted where the structure is designed and detailed in accordance with the provisions of AISC 341, Part II. In Seismic Design Category B or above, the design of such systems shall conform to the requirements of AISC 341, Part II.

2205*A*.3.1 Seismic Design Categories D, E and F. Composite structures are permitted in Seismic Design Categories D , E and F, subject to the limitations in Section 12.2.1 of ASCE 7 *and shall be considered as an alternative system*, where substantiating evidence is provided to demonstrate that the proposed system will perform as intended by AISC 341, Part II. The substantiating evidence shall be subject to building official approval. Where composite elements or connections are required to sustain inelastic deformations, the substantiating evidence shall be based on cyclic testing.

2205A.4 [For OSHPD 1 & 4] MODIFICATIONS TO AISC 341

2205A.4.1 Part I, Structural Steel Building Provisions Modifications.

2205A.4.1.1 Part I, Section 9. Special Moment Frame (SMF) modifications

2205A.4.1.1.1 *Part I, Section 9.2a. Requirements for Beam-to-Column Connections, Replace item (1) as follows.*

(Relocated from 2211A.4, 2001 CBC)The connection shall be capable of sustaining an interstory drift angle of at least 0.04 radians and an inelastic rotation of 0.03 radians.

2205A.4.1.1.2 *Part I, Section 9.2b(a). Use of SMF connections designed in accordance with ANSI / AISC 358 shall be as modified in Section 2205A.5*

2205A.4.1.2 *(Relocated from 2211A.5, 2001 CBC)* ***Part I, Section 10. Intermediate Moment Frame (IMF)*** *– Not permitted by OSHPD.*

2205A.4.1.3 *(Relocated from 2211A.6, 2001 CBC)* ***Part I, Section 11. Ordinary Moment Frame (OMF)*** *– Not permitted by OSHPD.*

2205A.4.1.4 *(Relocated from 2211A.7, 2001 CBC)* ***Part I, Section 12. Special Truss Moment Frame (STMF)*** *– Not permitted by OSHPD.*

2205A.4.1.5 Part I, Section 13. Special Concentrically Braced Frames (SCBF) modifications

2205A.4.1.5.1 Part I, 13.2 Members, Add a new section as follows.

AISC 341, 13.2f. Member Types

The use of rectangular HSS are not permitted for bracing members, unless filled solid with cement grout having a minimum compressive strength of 3000 psi at 28 days. The effects of composite action in the filled composite brace shall be considered in the sectional properties of the system where it results in the more severe loading condition or detailing.

2205A.4.1.6 Part I, Section 14. Ordinary Concentrically Braced Frames (OCBF) - *Not permitted by OSHPD.*

2205A.4.1.7 Part I, Section 15. Eccentrically Braced Frames (EBF) modifications

AISC 341, Part I, 15.4 Link-to-Column Connections, Delete the Exception.

2205A.4.2 Appendix S, Qualifying Cyclic Tests of Beam-to-Column and Link-to-Column Connections modifications

2205A.4.2.1 S3. Definitions. Replace the definition of Inelastic Rotation with the following:

(Relocated from 2211A.9.S3, 2001 CBC) ***Inelastic Rotation:*** *The permanent or plastic portion of the rotation angle between a beam and the column, or between a Link and the column of the Test Specimen, measured in radians. The Inelastic Rotation shall be computed based upon an analysis of the Test Specimen deformations. Sources of Inelastic Rotation include yielding of members and connectors, yielding of connection elements and slip between members and connection elements. For beam-to-column moment connections in Special Moment Frames, the inelastic rotation is represented by the plastic chord rotation angle calculated as the plastic deflection of the beam or girder, at the center of its span divided by*

the distance between the center of the beam span and the centerline of the panel zone of the beam-column connection. For link-to-column connections in Eccentrically Braced Frames, inelastic rotation shall be computed based upon the assumption that inelastic action is concentrated at a single point located at the intersection of the centerline of the link with the face of the column.

2205A.4.2.2 Appendix S, S3. Definitions. Add the following:

(Relocated from 2211A.1, 2001 CBC) ***Rapid Strength Deterioration:*** *A mode of behavior characterized by a sudden loss of strength. In a cyclic test with constant or increasing deformation amplitude, a loss of strength of more than 50% of the strength attained in the previous excursion in the same loading direction.*

2205A.4.2.3 Appendix S, Section S5.2. Size of Members – Replace as follows:

(Relocated from 2211A.10, 2001 CBC) The size of the beam or Link used in the Test Specimen shall be within the following limits:

1. *At least one of the test beams or Links shall be no less than 100% of the depth of the prototype beam or Link. For the remaining specimens, the depth of the test beam or Link shall be no less than 90 percent of the depth of the Prototype beam or Link.*

2. *At least one of the test beams or Links shall be no less than 100% of the weight per foot of the prototype beam or Link. For the remaining specimens, the weight per foot of the test beam or Link shall be no less than 75 percent of the weight per foot of the Prototype beam or Link.*

The size of the column used in the test specimen shall properly represent the inelastic action in the column, as per the requirements in Section S5.1. In addition, the depth of the test column shall be no less than 90% of the depth of the prototype column.

Extrapolation beyond the limitations stated in this section shall be permitted subject to peer review and approval by the enforcement agency.

2205A.4.2.4 Appendix S, Section S10. Acceptance Criteria – Replace as follows:

(Relocated from 2211A.12, 2001 CBC) The test specimens must satisfy the strength, interstory drift angle, or link rotation angle, and inelastic rotation requirements of these provisions for the Special Moment Frame and Eccentrically Braced Frame connection as applicable. The test specimen must sustain the required interstory drift angle, or link rotation angle, and inelastic rotation for at least two complete loading cycles without exhibiting rapid strength deterioration.

2205A.4.3 Appendix T, Qualifying Cyclic Tests of Buckling-Restrained Braces modification

AISC 341, T5.3 Similarity of Brace Test Specimen and Prototype, Replace (2) with the following:

The axial yield strength of the steel core P_{ysc} of the brace prototype shall not be more than 20 percent above nor 50% less than that of the test specimen where both strengths are based on the core area, A_{sc}, multiplied by the yield strength as determined from a coupon test. In addition, the material of the test specimen shall be the same ASTM classification and grade as the prototype.

2205A.5 [For OSHPD 1 & 4] MODIFICATIONS TO AISC 358

2205A.5.1 2. Design Requirements, 2.1 Special and Intermediate Moment Frame Connection Types, Table 2-1 Prequalified Moment Connections modifications

The prequalification of Bolted Unstiffened Extended End Plate and Bolted Stiffened Extended End Plate connections in buildings is not permitted by OSHPD.

The prequalification of moment connections at orthogonal moment frames sharing common columns or moment connections attached to other than one side or two opposite sides of a column is not permitted by OSHPD.

2205A.5.2 5. Reduced Beam Section (RBS) Moment Connection modifications

AISC 358, 5.3.1.7 Lateral Bracing of Beam shall be provided as follows: Replace the Exception with the following:

> ***Exception**: For both systems, where the beam supports a concrete structural slab that is connected between the protected zones with welded shear connectors spaced a maximum of 12 in. (300 mm) on center, supplemental top and bottom flange bracing at the reduced section may be omitted, subject to the approval of the enforcement agency. The concrete structural slab for the purposes of lateral bracing of the beam shall have a minimum of 5-1/4 inches in total thickness including metal deck, where occurs, have a minimum compressive strength of 4000 psi at 28 days and contain 6x6-W4xW4 WWF or equal.*

SECTION 2206*A* - STEEL JOISTS

2206*A*.1 General. The design, manufacture and use of open web steel joists and joist girders shall be in accordance with one of the following Steel Joist Institute (SJI) specifications:

1. SJI K-1.1
2. SJI LH / DLH-1.1
3. SJI JG-1.1

Where required, the seismic design of buildings shall be in accordance with the additional provisions of Section 2205*A*.2 or 2210*A*.5.

2206*A*.2 Design. The registered design professional shall indicate on the construction documents the steel joist and / or steel joist girder designations from the specifications listed in Section 2206*A*.1 and shall indicate the requirements for joist and joist girder design, layout, end supports, anchorage, non-SJI standard bridging, bridging termination connections and bearing connection design to resist uplift and lateral loads. These documents shall indicate special requirements as follows:

1. Special loads including:
   - 1.1. Concentrated loads;
   - 1.2. Nonuniform loads;
   - 1.3. Net uplift loads;
   - 1.4. Axial loads;
   - 1.5. End moments; and
   - 1.6. Connection forces.
2. Special considerations including:
   - 2.1. Profiles for nonstandard joist and joist girder configurations (standard joist and joist girder configurations are as indicated in the SJI catalog);
   - 2.2. Oversized or other nonstandard web openings; and
   - 2.3. Extended ends.
3. Deflection criteria for live and total loads for non-SJI standard joists.

2206*A*.3 Calculations. The steel joist and joist girder manufacturer shall design the steel joists and / or steel joist girders in accordance with the current SJI specifications and load tables to support the load requirements of Section 2206*A*.2. The registered design professional may require submission of the steel joist and joist girder calculations as prepared by a registered design professional responsible for the product design. If requested by the registered design professional, the steel joist manufacturer shall submit design calculations with a cover letter bearing the seal and signature of the joist manufacturer's registered design professional. In addition to standard calculations under this seal and signature, submittal of the following shall be included:

1. Non-SJI standard bridging details (e.g. for cantilevered conditions, net uplift, etc.).

2. Connection details for:

    2.1. Non-SJI standard connections (e.g. flush-framed or framed connections),

    2.2. Field splices, and

    2.3. Joist headers.

2206*A*.4 Steel joist drawings. Steel joist placement plans shall be provided to show the steel joist products as specified on the construction documents and are to be utilized for field installation in accordance with specific project requirements as stated in Section 2206*A*.2. Steel placement plans shall include, at a minimum, the following:

1. Listing of all applicable loads as stated in Section 2206*A*.2 and used in the design of the steel joists and joist girders as specified in the construction documents.

2. Profiles for nonstandard joist and joist girder configurations (standard joist and joist girder configurations are as indicated in the SJI catalog).

3. Connection requirements for:

    3.1. Joist supports;

    3.2. Joist girder supports;

    3.3. Field splices; and

    3.4. Bridging attachments.

4. Deflection criteria for live and total loads for non-SJI standard joists.

5. Size, location and connections for all bridging.

6. Joist headers.

Design Approval. *Joist and joist girder design calculations and profiles with member sizes and connection details, and joist placement plans shall be provided to the enforcement agency and approved prior to joist fabrication, in accordance with Title 24, Part 1. Joist and joist girder design calculations and profiles with member sizes and connection details shall bear the signature and stamp or seal of the registered engineer or licensed architect responsible for the joist design. Alterations to the approved joist and joist girder design calculations and profiles with member sizes and connection details, or to fabricated joists are subject to the approval of the enforcement agency.*

~~Steel joist placement plans do not require the seal and signature of the joist manufacturer's registered design professional.~~

2206*A*.5 Certification. At completion of fabrication, the steel joist manufacturer shall submit a certificate of compliance in accordance with Section 1704*A*.2.2 stating that work was performed in accordance with approved construction documents and with SJI standard specifications.

2206A.6 *(Relocated from 2205A.7.1, 2001 CBC)* ~~*Materials for fabricated joists shall be tested in accordance with Section 2231A.*~~ ~~*The material, design, manufacture and use of steel joists shall conform to the requirements of this chapter and to Division IX, except delete Division IX Sections 4.6 (b), 4.6(c), 103.8 (b),*~~

~~and 1003.8 (b) and use Division XII Section 2231A for design verification tests for all joists included in Division IX.~~

Joist Chord Bracing. *The chords of all joists shall be laterally supported at all points where the chords change direction.*

SECTION 2207*A* - STEEL CABLE STRUCTURES

2207*A*.1 General. The design, fabrication and erection including related connections, and protective coatings of steel cables for buildings shall be in accordance with ASCE 19.

2207*A*.2 Seismic requirements for steel cable. The design strength of steel cables shall be determined by the provisions of ASCE 19 except as modified by these provisions.

1. A load factor of 1.1 shall be applied to the prestress force included in T_3 and T_4 as defined in Section 3.12.

2. In Section 3.2.1, Item (c) shall be replaced with "1.5 T_3" and Item (d) shall be replaced with "1.5 T_4."

SECTION 2208*A* STEEL STORAGE RACKS

2208*A*.1 Storage racks. The design, testing and utilization of industrial steel storage racks shall be in accordance with the *RMI Specification for the Design, Testing and Utilization of Industrial Steel Storage Racks*. Racks in the scope of this specification include industrial pallet racks, movable shelf racks and stacker racks and does not apply to other types of racks, such as drive-in and drive-through racks, cantilever racks, portable racks or rack buildings. Where required, the seismic design of storage racks shall be in accordance with the provisions of Section 15.5.3 of ASCE 7.

SECTION 2209*A* - COLD-FORMED STEEL

2209*A*.1 General. The design of cold-formed carbon and low-alloy steel structural members shall be in accordance with AISI-NAS. The design of cold-formed stainless-steel structural members shall be in accordance with ASCE 8. Cold-formed steel light-framed construction shall comply with Section 2210*A*.

2209*A*.2 Composite slabs on steel decks. Composite slabs of concrete and steel deck shall be designed and constructed in accordance with ASCE 3.

2209A.3 *(Relocated from 2205A.4.1, 2001 CBC)* ***Steel Deck Diaphragms.*** *Steel deck diaphragms shall comply with the requirements of this section and Section ~~1613A~~ 1604A. ~~Materials for steel deck diaphragms shall conform to the requirements of Division VII and shall be identified in accordance with Section 2203A.3. Unidentified steel shall be tested in accordance with Section 2203A.1.~~ The design of the diaphragm as well as the construction details may be based on test information acceptable to the enforcement agency. Steel deck and concrete-filled steel deck diaphragms that is tested per ICC-ES AC 43 shall be considered to meet the requirements of this section.*

Diaphragm chord forces both compression and tension forces resulting from in-plane shear shall be resisted by flange members and not by the steel deck diaphragm.

The base material thickness of steel deck for diaphragms shall not be less than 0.0359 inch (0.9 mm) (20 gage), unless tests acceptable to the enforcement agency have been performed.

~~Weld washers shall be used for steel decks with a base metal thickness of material greater than 0.028 inch (0.7 mm) when the allowable shear values used in the diaphragm are obtained from the result of tests using weld washers.~~

Welding inspection shall conform to Section ~~2231A, Division XII~~ 2204A.1.

SECTION 2210*A* - COLD-FORMED STEEL LIGHT-FRAMED CONSTRUCTION

2210*A*.1 General. The design, installation and construction of cold-formed carbon or low-alloy steel, structural and nonstructural steel framing shall be in accordance with AISI-General and AISI-NAS.

2210*A*.2 Headers. The design and installation of cold-formed steel box headers, back-to-back headers and single and double L-headers used in single-span conditions for load-carrying purposes shall be in accordance with AISI-Header,

subject to the limitations therein.

2210*A*.3 Trusses. The design, quality assurance, installation and testing of cold-formed steel trusses shall be in accordance with AISI-Truss, subject to the limitations therein.

Complete engineering analysis and truss design drawings shall accompany the construction documents submitted to the enforcement agency for approval. When load testing is required per Section G of AISI-Truss, the test report shall be submitted with the truss design drawings and engineering analysis to the enforcement agency.

2210*A*.4 Wall stud design. The design and installation of cold-formed steel studs for structural and nonstructural walls shall be in accordance with AISI-WSD. *Cold formed steel stud foundation plates or sills shall be bolted or fastened to the foundation or foundation wall in accordance with Section 2304.3.4, Item 2.*

2210*A*.5 Lateral design. The design of light-framed cold-formed steel walls and diaphragms to resist wind and seismic loads shall be in accordance with AISI-Lateral.

(Relocated from 2219A.2, 2001 CBC) Shear wall assemblies per Section C2.2.3 of AISI-Lateral are not permitted within the seismic force-resisting system of buildings or structures assigned to Occupancy Category II, III, IV, or buildings designed to be relocatable.

2210*A*.6 Prescriptive framing. *Not permitted by OSHPD and DSA-SS*. ~~Detached one- and two-family dwellings and townhouses, up to two stories in height, shall be permitted to be constructed in accordance with AISI-PM, subject to the limitations therein.~~

SECTION 2211A - [FOR DSA-SS] LIGHT MODULAR STEEL MOMENT FRAMES FOR PUBLIC ELEMENTARY AND SECONDARY SCHOOLS, AND COMMUNITY COLLEGES

2211A.1 General

***2211A.1.1 Configuration**. Light Modular Steel Moment Frame buildings shall be constructed of factory-assembled modules comprising a single story moment-resisting space frame supporting a floor and roof. Individual modules shall not exceed a width of 14 feet (4.25 meters) nor a length of 72 feet (22 meters). All connections of beams to corner columns shall be designed as moment-resisting in accordance with the criteria of Section 2211A.2.3. Modules may be stacked to form multi-story structures not exceeding 35 feet or two stories in height. When stacked modules are evaluated separately, seismic forces on each module shall be distributed in accordance with Section 12.8.3 of ASCE 7, considering the modules in the stacked condition. See 2211A.2.5 of this code.*

***2211A.1.2. Design, fabrication and erection**. The design, fabrication and erection of Light Modular Steel Moment Frame buildings shall be in accordance with the AISC Specification for Structural Steel Buildings (ANSI/AISC 360) and the AISI North American Specification for the Design of Cold Formed Structural Members (AISI/COC/NASPEC) as applicable, and the requirements of this section. The maximum dead load of the roof and elevated floor shall not exceed 25 psf and 50 psf respectively. The maximum dead load of the exterior walls shall not exceed 45 psf.*

***2211A.2 Seismic requirements**. In addition to the other requirements of this code, the design, materials and workmanship of Light Modular Steel Moment Frames shall comply with the requirements of this section. The response modification coefficient, R, shall be equal to 3½. C_d and Ω_0 shall be equal to 3.0.*

***2211A.2.1 Base Materials**. Beams, columns, and connection materials shall be limited to those materials permitted under the AISC Specification for Structural members (ANSI/AISC 360) and the AISI North American Specification for the Design of Cold Formed Structural members (AISI/COC/NASPEC).*

***2211A.2.2 Beam to Column Strength Ratio**. At each moment-resisting connection the following shall apply:*

$$\frac{\sum S_{bi} F_{ybi}}{\sum S_{cj} F_{ycj}} \geq 1.4$$

where:

F_{ybi} is the specified yield stress of beam "i"

F_{ycj} is the specified yield stress of column "j"

S_{bi} is the flexural section modulus of each beam "i" that is moment connected to the column "j" at the connection

S_{cj} is the flexural section modulus of each column "j" that is moment connected to the beam "i" at the connection

Exceptions:

1. *Beam-column connections at the floor level beams of first or second-story modules need not comply with this requirement.*

2. *Beam-to-column strength ratios less than 1.4 are allowed if proven to be acceptable by analysis or testing.*

***2211A.2.3 Welding**. Weld filler metals shall be be capable of producing weld metal with a minimum Charpy V-Notch toughness of 20 ft-lbs at 0°F. Where beam bottom flanges attach to columns with complete joint penetration groove welds and weld backing is used at the bottom surface of the beam flange, such backing shall be removed and the root pass back-gouged, repaired and reinforced with a minimum 3/16" (5mm) fillet weld.*

***2211A.2.4 Connection Design**. Connections of beams to columns shall have the design strength to resist the maximum seismic load effect, E_m, calculated in accordance with Section 12.4.3 of ASCE 7.*

***2211A.2.5 Multi-story assemblies**. Analysis of multi-story assemblies shall be permitted to consider the stacked modules as a single assembly, with restraint conditions between the stacked units that represent the actual method of attachment. Alternatively, it shall be permitted to analyze the individual modules of stacked assemblies independently, with lateral and vertical reactions from modules above applied as concentrated loads at the top of the supporting module.*

SECTION 2212A -TESTING

***2212A.1** (Relocated from 2231A.1, 2001 CBC) **Tests of Structural Steel.** All steel used for structural purposes shall be identified as required by Section 2203A.1. Manufacturer's mill analyses and test reports are acceptable for properly identified steel, but the enforcement agency may require additional testing to determine the quality of the steel if there is any doubt as to its acceptability. Any steel not properly identified shall be tested to meet the minimum chemical and mechanical requirements of the ASTM standard appropriate for the steel specified for the structure.*

***EXCEPTION:** No mechanical tests are required for unidentified steel when the minimum yield stress required by the design is less than or equal to 25 ksi (172 MPa) and the steel is not part of the designated lateral-force-resisting system.*

***2212A.2** (Relocated from 2231A.2, 2001 CBC) **Tests of High-strength Bolts, Nuts and Washers**. High-strength bolts, nuts and washers shall be sampled and tested by an approved independent testing laboratory for conformance with the requirements of ~~Division III~~ Section 2205A.*

***2212A.3** (Relocated from 2231A.3, 2001 CBC) **Tests of End-welded Studs.** End-welded studs shall be sampled and tested ~~and inspected~~ per the requirements of the ~~StructuralWelding Code.Steel, 1998 edition, published by the American Welding Society.~~ AWS D1.1.*

***2212A.4** (Relocated from 2231A.8, CBC 2001) **Tests of Beam to Column Moment Connections.** When testing is required in these provisions for beam-to-column moment connections in moment frames and link-to-column connections in eccentric braced frames, it shall meet the requirements of ~~Appendix S Qualifying Cyclic Tests of Beam and Link-to-Column Connections as part of the Seismic Provisions for Structural Steel Buildings, April 15, 1997, published by the American Institute of Steel Construction, 1 East Wacker Drive, Suite 3100, Chicago, IL 60601, including Supplement No. 1 dated February 15, 1999, with the amendments of Section 2211A.~~ AISC – 341 Appendix S as modified in Section 2205A.*

Notation [For DSA-SS]:
Authority: Education Code Sections 17310, 81142; Health & Safety Code Section 16022
Reference(s): Education Code Sections 17280 - 17317, and 811130 - 81149; Health & Safety Code Sections 16000 – 16023

Notation [For OSHPD]:
Authority: Health and Safety Code Section 129850
Reference: Health and Safety Code Sections 1275, 129850 and 129790

Chapter 23 - Wood

2001 CBC	PROPOSED ADOPTION	OSHPD				DSA-SS	Comments
		1	2	3	4		
	Adopt entire chapter without amendments			X			
	Adopt entire chapter with amendments listed below	X	X		X	X	
	Adopt only those sections listed below						
	2301.1.1 CA	X	X		X	X	
	2301.1.2 CA	X	X		X	X	
	2301.1.3 CA	X	X		X	X	
2316A.2 Item # 29	*2303.1.3.1 CA*	X	X		X	X	Relocated existing California Building Standards into IBC format
	2303.4.1.2 (Exception # 3) CA	X	X		X	X	
	2303.4.1.3 (Exception # 2) CA	X	X		X	X	
2318A.7	*2303.4.3 CA*	X	X		X	X	Relocated existing California Building Standards into IBC format
2320A.6 2320A.11.9	*2304.3.4 CA*	X	X		X	X	Relocated existing California Building Standards into IBC format
2320A.8.1, 2320A.11.9, 2320A.12.1	*2304.4.1 CA*	X	X		X	X	Relocated existing California Building Standards into IBC format
2318A.3.4	*2304.9.1.1 CA*	X	X		X	X	Relocated existing California Building Standards into IBC format
2306A.4	*2304.11.2.2 Exception CA*	X	X		X	X	Relocated existing California Building Standards into IBC format
2306A.4	*2304.11.2.4.1 CA*	X	X		X	X	Relocated existing California Building Standards into IBC format
-	*2305.1.7 CA*	X	X		X	X	
2315A.3.3	*2305.2.4.2 CA*	X	X		X	X	Relocated existing California Building Standards into IBC format
-	*Table 2306.4.1 footnote m. CA*	X	X		X	X	See *2305.2.4.2 CA*.
2513	*2306.4.5 Exception CA*	X	X		X	X	Relocated existing California Building Standards into IBC format
2320A.1	*2308.2 item # 8 CA*	X	X		X	X	Relocated existing California Building Standards into IBC format

REPEAL OF EXISTING CALIFORNIA AMENDMENTS IN PART OR IN WHOLE THAT ARE NO LONGER NECESSARY AS FOLLOWS:

~~2001 CBC CHAPTER 23 – WOOD:~~ Repeal all amendments in this Chapter.

CBC 2001 CHAPTER 23A – WOOD

CBC 2001 DIVISION I – GENERAL DESIGN REQUIREMENTS

~~2001 CBC SECTION 2302A – DEFINITIONS:~~ Repeal all amendments in this section.

~~2001 CBC SECTION 2303A – STANDARDS OF QUALITY:~~ Repeal all amendments in this section.

~~2001 CBC SECTION 2304A – MINIMUM QUALITY:~~ Repeal all amendments in this section.

~~2001 CBC SECTION 2305A – DESIGN AND CONSTRUCTION REQUIREMENTS:~~ Repeal all amendments in this section.

CBC 2001 DIVISION II – GENERAL REQUIREMENTS

CBC 2001 SECTION 2306A – DECAY AND TERMITE PROTECTION~~:~~ Repeal all amendments in following subsections.

~~2306A.5, 2306A.6, 2306A.7, 2306A.11~~ and ~~2306A.12.~~

~~2001 CBC SECTION 2307A – WOOD SUPPORTING MASONRY OR CONCRETE:~~ Repeal all amendments in this section.

~~2001 CBC SECTION 2308A – WALL FRAMING:~~ Repeal all amendments in this section.

~~2001 CBC SECTION 2310A – EXTERIOR WALL COVERING:~~ Repeal all amendments in this section.

~~2001 CBC SECTION 2311A – INTERIOR PANELING:~~ Repeal all amendments in this section.

~~2001 CBC SECTION 2312A – SHEATHING:~~ Repeal all amendments in this section.

~~CBC 2001 SECTION 2315A – WOOD SHEAR WALLS AND DIAPHRAGMS:~~ Repeal all amendments in this section.

CBC 2001 CHAPTER 23A - TABLES: Repeal all amendments in following tables.

~~Tables 23A-II-B-1, 23A-II-E-1, 23A-II-E-2, 23A-II-F-2, 23A-II-G, 23A-II-H, 23A-II-I-1, 23A- II-I-2~~ and ~~23A-II-J.~~

CBC 2001 DIVISION III – DESIGN SPECIFICATIONS FOR ALLOWABLE DESIGN OF WOOD BUILDINGS

~~CBC 2001 SECTION 2316A – DESIGN SPECIFICATIONS:~~ Repeal all amendments in this section.

~~CBC 2001 SECTION 2318A – TIMBER CONECTORS AND FASTENERS:~~ Repeal all amendments in this section.

~~2001 CBC SECTION 2319A – WOOD SHEAR WALLS AND DIAPHRAGMS:~~ Repeal all amendments in this section.

CBC 2001 DIVISION IV – CONVENTIONAL LIGHT-FRAME CONSTRUCTION

CBC 2001 SECTION 2320A – DESIGN SPECIFICATIONS: Repeal all amendments in following subsections.

~~2320A.1, 2320A.2, 2320A.3, 2320A.4, 2320A.4, 2320A.5~~ including all subsections, ~~2320A.8.1, 2320A.8.3, 2320A8.5, 2320A.8.7, 2320A.9~~ including all subsections and ~~2320A.11~~ including all subsections.

CBC 2001 CHAPTER 23A - TABLES: Repeal all amendments in following tables.

~~Tables 23A-IV-A, 23A-IV-B~~ and ~~23A-IV-J-1~~ through ~~23A-IV-V-2.~~

~~CBC 2001 DIVISION V – DESIGN STANDARD FOR METAL PLATE CONNECTED WOOD TRUSS:~~ Repeal all amendments in this division.

~~CBC 2001 DIVISION VI – PLYWOOD STRESSED SKIN PANELS:~~ Repeal all amendments in this division.

~~CBC 2001 DIVISION VII~~ and ~~VIII:~~ Repeal all amendments in these divisions.

~~CBC 2001 DIVISION IX:~~ Repeal all amendments in these divisions.

Notation [For DSA-SS]:
Authority: Education Code Sections 17310, 81142; Health & Safety Code Section 16022
Reference(s): Education Code Sections 17280 - 17317, and 811130 - 81149; Health & Safety Code Sections 16000 – 16023

Notation [For OSHPD]:
Authority: Health and Safety Code Section 129850
Reference: Health and Safety Code Sections 1275, 129850 and 129790

EXPRESS TERMS

SECTION 2301 - GENERAL

2301.1 Scope. The provisions of this chapter shall govern the materials, design, construction and quality of wood members and their fasteners.

2301.1.1 [For DSA-SS and OSHPD 1,2 & 4] Application *The scope of application of Chapter 23 is as follows:*

1. Applications listed in Section 109.2, regulated by the Division of the State Architect-Structural Safety (DSA-SS). These applications include public elementary and secondary schools, community colleges and state-owned or state-leased essential services buildings.

2. Applications listed in Section 110, regulated by the Office of Statewide Health Planning and Development (OSHPD). These applications include hospitals, skilled nursing facilities, intermediate care facilities and correctional treatment centers.

Exception: *For applications listed in Section 110.3 (Licensed Clinics), the provisions of this chapter without OSHPD amendments identified per 2301.1.2 shall apply.*

2301.1.2 [For DSA-SS and OSHPD 1,2 & 4] Identification of amendments. *Division of the State Architect-Structural Safety and Office of Statewide Health Planning and Development amendments appear in this chapter preceded with the appropriate acronym, as follows:*

1. *Division of the State Architect - Structural Safety:*

   [DSA-SS] - *For applications listed in Section 109.2*

2. *Office of Statewide Health Planning and Development:*

   [OSHPD 1] *- For applications listed in Section 110.1*

   [OSHPD 2] *- For applications listed in Section 110.2*

   [OSHPD 4] *- For applications listed in Section 110.4*

2301.1.3 [For DSA-SS and OSHPD 1, 2 & 4] Reference to other chapters. *Where reference within this chapter is made to sections in Chapters 16, 17, 18, 19, 21, 22, and 34, the provisions in Chapters 16A, 17A, 18A, 19A, 21A, 22A, and 34A respectively shall apply instead.*

Exception: *For DSA-SS the requirements of Chapter 34 shall apply instead of Chapter 34A.*

2301.2 General design requirements. The design of structural elements or systems, constructed partially or wholly of wood or wood-based products, shall be in accordance with one of the following methods:

1. Allowable stress design in accordance with Sections 2304, 2305 and 2306.

2. Load and resistance factor design in accordance with Sections 2304, 2305 and 2307.

3. Conventional light-frame construction in accordance with Sections 2304 and 2308.

…

Notation [For DSA-SS]:
Authority: Education Code Sections 17310, 81142; Health & Safety Code Section 16022
Reference(s): Education Code Sections 17280 - 17317, and 811130 - 81149; Health & Safety Code Sections 16000 – 16023

Notation [For OSHPD]:
Authority: Health and Safety Code Section 129850
Reference: Health and Safety Code Sections 1275, 129850 and 129790

SECTION 2302 - DEFINITIONS

2302.1 Definitions. The following words and terms shall, for the purposes of this chapter, have the meanings shown herein.

…

SECTION 2303 - MINIMUM STANDARDS AND QUALITY

2303.1 General.

...

2303.1.1 Sawn lumber.

...

2303.1.2 Prefabricated wood I-joists.

...

2303.1.3 Structural glued-laminated timber. Glued-laminated timbers shall be manufactured and identified as required in AITC A190.1 and ASTM D 3737.

2303.1.3.1 *(Relocated from 2316A.2 Item # 29, CBC 2001)* ***[For DSA-SS and OSHPD 1, 2 and 4] Additional requirements.*** *The construction documents shall indicate the following:*

1. Dry or wet service conditions (NDS 5.1.4.1)

2. Laminating combinations and stress requirements (NDS 5.1.4.1)

3. Species group (refer to Section 2304.11.3, Tables 2306.3.1 and 2306.3.2 footnote a., and AF&PA SDPWS Tables 4.2A and 4.2B, footnote 2).

4. Preservative material and retention, when preservative treatment is required (refer to Section 2304 .11.3 and NDS Section 5.3.11).

5. Provisions for protection during shipping and field handling, such as sealing and wrapping in accordance with AITC 111.

When mechanical reinforcement such as radial tension reinforcement is required, such reinforcement shall comply with AITC 404 and shall be detailed accordingly in the construction documents. Construction documents shall specify that the moisture content of laminations at the time of manufacture shall not exceed 12% for dry conditions of use.

The design of fasteners and connections shall comply with AITC 117, Section I, item 6 (Connection Design), and NDS Appendix E.

Refer to Section 1704A.6.2 for special inspection requirements during fabrication of structural glued laminated timbers.

Exception: [For OSHPD 2] *Special inspection shall be per Chapter 17 instead of 17A.*

Notation [For DSA-SS]:
Authority: Education Code Sections 17310, 81142; Health & Safety Code Section 16022

Reference(s): Education Code Sections 17280 - 17317, and 811130 - 81149; Health & Safety Code Sections 16000 – 16023

Notation [For OSHPD]:
Authority: Health and Safety Code Section 129850
Reference: Health and Safety Code Sections 1275, 129850 and 129790

2303.1.4 Wood structural panels.

…

2303.1.5 Fiberboard.

…

2303.1.6 Hardboard.

…

2303.1.7 Particleboard.

…

2303.1.8 Preservative-treated wood.

…

2303.1.9 Structural composite lumber.

…

2303.1.10 Structural log members.

…

2303.1.11 Round timber poles and piles.

…

2303.2 Fire-retardant-treated wood.

…

2303.3 Hardwood and plywood.

…

2303.4 Trusses.

2303.4.1 Design. Wood trusses shall be designed in accordance with the provisions of this code and accepted engineering practice. Members are permitted to be joined by nails, glue, bolts, timber connectors, metal connector plates or other approved framing devices.

2303.4.1.1 Truss designer. The individual or organization responsible for the design of trusses.

2303.4.1.2 Truss design drawings. The written, graphic and pictorial depiction of each individual truss shall be provided to the building official and approved prior to installation. Truss design drawings shall also be provided with the shipment of trusses delivered to the job site. Truss design drawings shall include, at a minimum, the information specified below:

1. Slope or depth, span and spacing;
2. Location of joints;
3. Required bearing widths;
4. Design loads as applicable;
5. Top chord live load (including snow loads);
6. Top chord dead load;
7. Bottom chord live load;

8. Bottom chord dead load;

9. Concentrated loads and their points of application as applicable;

10. Controlling wind and earthquake loads as applicable;

11. Adjustments to lumber and metal connector plate design value for conditions of use;

12. Each reaction force and direction;

13. Metal connector plate type, size, thickness or gage, and the dimensioned location of each metal connector plate except where symmetrically located relative to the joint interface;

14. Lumber size, species and grade for each member;

15. Connection requirements for:

    15.1. Truss to truss;

    15.2. Truss ply to ply; and

    15.3. Field splices.

16. Calculated deflection ratio and maximum vertical and horizontal deflection for live and total load as applicable;

17. Maximum axial tensile and compression forces in the truss members; and

18. Required permanent individual truss member bracing and method per Section 2303.4.1.5, unless a specific truss member permanent bracing plan for the roof or floor structural system is provided by a registered design professional.

Where required by one of the following, each individual truss design drawing shall bear the seal and signature of the truss designer:

1. Registered design professional; or

2. Building official; or

3. Statutes of the jurisdiction in which the project is to be constructed.

Exceptions:

1. When a cover sheet/truss index sheet combined into a single cover sheet is attached to the set of truss design drawings for the project, the single sheet/truss index sheet is the only document that needs to be signed and sealed within the truss submittal package.

2. When a cover sheet and a truss index sheet are separately provided and attached to the set of truss design drawings for the project, both the cover sheet and the truss index sheet are the only documents that need to be signed and sealed within the truss submittal package.

*3. **[For DSA-SS and OSHPD 1, 2 and 4]** Exceptions 1 and 2 not permitted by DSA-SS and OSHPD.*

2303.4.1.3 Truss placement diagram. The truss manufacturer shall provide a truss placement diagram that identifies the proposed location for each individually designated truss and references the corresponding truss design drawing. The truss placement diagram shall be provided as part of the truss submittal package, and with the shipment of trusses delivered to the job site. Truss placement diagrams shall not be required to bear the seal or signature of the truss designer.

Exceptions: When the truss placement diagram is prepared under the direct supervision of a registered design professional, it is required to be signed and sealed.

2303.4.1.4 Truss submittal package. The truss submittal package shall consist of each individual truss design drawing, the truss placement diagram for the project, the truss member permanent bracing specification and, as applicable, the cover sheet/truss index sheet.

2303.4.1.5 Truss member permanent bracing. Where permanent bracing of truss members is required on the truss design drawings, it shall be accomplished by one of the following methods:

1. The trusses shall be designed so that the buckling of any individual truss member can be resisted internally by the structure (e.g. buckling member T-bracing, L-bracing, etc.) of the individual truss. The truss individual member buckling reinforcement shall be installed as shown on the truss design

drawing or on supplemental truss member buckling reinforcement diagrams provided by the truss designer.

2. Permanent bracing shall be installed using standard industry bracing details that conform with generally accepted engineering practice. Individual truss member continuous lateral bracing location(s) shall be shown on the truss design drawing.

2303.4.1.6 Anchorage. All transfer of loads and anchorage of each truss to the supporting structure is the responsibility of the registered design professional.

2303.4.1.7 Alterations to trusses. Truss members and components shall not be cut, notched, drilled, spliced or otherwise altered in any way without written concurrence and approval of a registered design professional. Alterations resulting in the addition of loads to any member (e.g., HVAC equipment, water heater) shall not be permitted without verification that the truss is capable of supporting such additional loading.

2303.4.2 Metal-plate-connected trusses. In addition to Sections 2303.4.1 through 2303.4.1.7, the design, manufacture and quality assurance of metal-plate-connected wood trusses shall be in accordance with TPI 1. Manufactured trusses shall comply with Section 1704.6 as applicable.

2303.4.3 *(Relocated from 2318A.7, CBC 2001)* ***[For DSA-SS and OSHPD 1, 2 and 4] Additional Requirements.*** *In addition to Sections 2304.1 and 2304.2, the following requirements apply:*

1. ***Construction Documents.*** *The construction documents prepared by the registered engineer or licensed architect for the project shall indicate all requirements for the truss design, including:*

1.1 Truss profiles and layout, including girder truss locations.

1.2 Design loads, support reactions, uplift or lateral connection forces, and deflection criteria.

1.3 Connection details to structural and non-structural elements (e.g. non-bearing partitions).

1.4 Bridging and bracing attachments to supporting structural elements.

1.5 Wood species and minimum grade (refer to Section 2304.11.3, Tables 2306.3.1 and 2306.3.2 footnote a., and AF&PA SDPWS Tables 4.2A and 4.2B, footnote 2).

1.6 For metal plate connected wood trusses, also refer to ANSI/TPI 1, Section 2.2.

2. ***Truss Design Drawings.*** *Each truss design drawings shall bear the signature and stamp or seal of the registered engineer or licensed architect responsible for the truss design.*

3. ***Requirements for Approval.*** *The truss design drawings and engineering analysis shall be provided to the enforcement agency and approved prior to truss fabrication, in accordance with C.C.R.,Title 24, Part 1. Alterations to the approved truss design drawings or manufactured trusses are subject to the approval of the enforcement agency.*

4. ***Special Inspection During Truss Manufacture.*** *Refer to Section 1704A.6.2 for special inspection requirements during the manufacture of open-web trusses.*

2303.5 Test standard for joist hangers and connectors.

...

2303.6 Nails and staples.

...

2303.7 Shrinkage.

...

Notation [For DSA-SS]:
Authority: Education Code Sections 17310, 81142; Health & Safety Code Section 16022
Reference(s): Education Code Sections 17280 - 17317, and 811130 - 81149; Health & Safety Code Sections 16000 – 16023

Notation [For OSHPD]:
Authority: Health and Safety Code Section 129850
Reference: Health and Safety Code Sections 1275, 129850 and 129790

SECTION 2304 - GENERAL CONSTRUCTION REQUIREMENTS

2304.1 General. The provisions of this section apply to design methods specified in Section 2301.2.

2304.2 Size of structural members. Computations to determine the required sizes of members shall be based on the net dimensions (actual sizes) and not nominal sizes.

2304.3 Wall framing. The framing of exterior and interior walls shall be in accordance with the provisions specified in Section 2308 unless a specific design is furnished.

2304.3.1 Bottom plates. Studs shall have full bearing on a 2-inch-thick (actual $1^1/_2$-inch, 38 mm) or larger plate or sill having a width at least equal to the width of the studs.

2304.3.2 Framing over openings. Headers, double joists, trusses or other approved assemblies that are of adequate size to transfer loads to the vertical members shall be provided over window and door openings in load-bearing walls and partitions.

2304.3.3 Shrinkage. Wood walls and bearing partitions shall not support more than two floors and a roof unless an analysis satisfactory to the building official shows that shrinkage of the wood framing will not have adverse effects on the structure or any plumbing, electrical or mechanical systems, or other equipment installed therein due to excessive shrinkage or differential movements caused by shrinkage. The analysis shall also show that the roof drainage system and the foregoing systems or equipment will not be adversely affected or, as an alternate, such systems shall be designed to accommodate the differential shrinkage or movements.

2304.3.4 [For DSA-SS and OSHPD 1, 2 and 4] Additional Requirements. *The following additional requirements apply:*

1. *Engineering analysis shall be furnished that demonstrates compliance of wall framing elements and connections with Section 2301.2, Item 1 or 2.*

2. *(Relocated from 2320A.6, CBC 2001)Construction documents shall include detailing of sill plate anchorage to supporting masonry or concrete for all exterior and interior bearing, non-bearing and shear walls. ~~Sills under bearing, exterior or shear walls shall be bolted to the masonry or concrete with not smaller than 5/8-inch by~~ Unless specifically designed in accordance with item 1 above, sills under exterior walls, bearing walls and shear walls shall be bolted to masonry or concrete with 5/8" diameter by 12 inch (16 mm by 305 mm) bolts spaced not more than four (4) feet (1219 mm) on center, with a minimum of two (2) bolts for each piece of sill plate. ~~There shall be a bolt within 9 inches (229 mm) of each end of each piece of sill. The effective embedment length in concrete of bolts designed to resist overturning or uplift forces shall not include the embedment in 6-inch (152 mm) or narrower concrete curbs. Where sills are bored or notched exceeding one third the sill width, extra bolts shall be required as given for ends of sill pieces. All sills shall bear on a level and competent concrete or masonry supporting surface.~~ Anchor bolts shall have a 4 inch minimum and a 12 inch maximum clearance to the end of the sill plate, and 7 inch minimum embedment into concrete or masonry.*

   ~~Sills~~ Unless specifically designed in accordance with item 1 above, sill plates under non-bearing interior ~~walls and~~ partitions on concrete floor slabs shall be anchored at not more than four (4) feet (1219 mm) on center to resist a minimum allowable stress shear of ~~not less than 50~~ 100 pounds per linear foot (~~0.7~~ 1.4 kN/m) acting either parallel or ~~normal~~ perpendicular to the wall.

   ~~The nominal thickness of the sills shall not be less than 3 inches (76 mm) when the wall is diagonally sheathed, and not less than 2 inches (51 mm) in any event.~~

   ~~Treated wood sills where cut, drilled or notched shall be treated with a preservative and approved by the architect and the enforcement agency on all exposed surfaces from which preservative treatment has been removed.~~

3. *(Relocated from 2320A.11.9, CBC 2001) ~~Any cutting and notching shall be detailed on the approved plans.~~Construction documents shall include detailing and limitations for notches and bored holes in wall studs, plates and sills. Refer to Sections 2308.9.10 and 2308.9.11 for code-prescribed limitations.*

2304.4 Floor and roof framing. The framing of wood-joisted floors and wood framed roofs shall be in accordance with the provisions specified in Section 2308 unless a specific design is furnished.

2304.4.1 [For DSA-SS and OSHPD 1, 2 and 4] Additional Requirements. *The following additional requirements apply:*

1. *(Relocated from 2320A.8.1, CBC 2001) Engineering analysis shall be furnished that demonstrates compliance of floor, roof and ceiling framing elements and connections with Section 2301.2, Item 1 or 2.*
2. *(Relocated from 2320A.11.9 and 2320A.12.1, CBC 2001) Construction documents shall include detailing and limitations for notches and bored holes in floor and roof framing members. Refer to Section 2308.10.4.2 and NDS Section 4.4.3.*

2304.5 Framing around flues and chimneys. Combustible framing shall be a minimum of 2 inches (51 mm), but shall not be less than the distance specified in Sections 2111 and 2113 and the ~~*International*~~ *California* *Mechanical Code*, from flues, chimneys and fireplaces, and 6 inches (152 mm) away from flue openings.

2304.6 Wall sheathing. Except as provided for in Section 1405 for weatherboarding or where stucco construction that complies with Section 2510 is installed, enclosed buildings shall be sheathed with one of the materials of the nominal thickness specified in Table 2304.6 or any other approved material of equivalent strength or durability.

…

2304.6.1 Wood structural panel sheathing.

...

2304.6.2 Interior paneling.

...

2304.7 Floor and roof sheathing.

…

2304.8 Lumber decking.

…

2304.9 Connections and fasteners.

2304.9.1 Fastener requirements. Connections for wood members shall be designed in accordance with the appropriate methodology in Section 2301.2. The number and size of fasteners connecting wood members shall not be less than that set forth in Table 2304.9.1.

2304.9.1.1 [For DSA-SS and OSHPD 1, 2 and 4] Additional Requirements. *(Relocated from 2318A.3.4, CBC 2001) Fasteners used for the attachment of exterior wall coverings shall be of hot-dipped zinc-coated galvanized steel, mechanically deposited zinc-coated steel, stainless steel, silicon bronze or copper. The coating weights for hot-dipped zinc-coated fasteners shall be in accordance with ASTM A 153. The coating weights for mechanically deposited zinc coated fasteners shall be in accordance with ASTM B 695, Class 55 minimum.*

…

2304.9.2 Sheathing fasteners. Sheathing nails or other approved sheathing connectors shall be driven so that their head or crown is flush with the surface of the sheathing.

2304.9.3 Joist hangers and framing anchors. Connections depending on joist hangers or framing anchors, ties and other mechanical fastenings not otherwise covered are permitted where approved. The vertical load-bearing capacity, torsional moment capacity and deflection characteristics of joist hangers shall be determined in accordance with Section 1715.1.

2304.9.4 Other fasteners. Clips, staples, glues and other approved methods of fastening are permitted where approved.

2304.9.5 Fasteners in preservative-treated and fire-retardant-treated wood. Fasteners for preservative- treated and fire-retardant-treated wood shall be of hot dipped zinc-coated galvanized steel, stainless steel, silicon bronze or copper. The coating weights for zinc-coated fasteners shall be in accordance with ASTM A 153.

Exception: Fasteners other than nails, timber rivets, wood screws and lag screws shall be permitted to be of mechanically deposited zinc coated steel with coating weights in accordance with ASTM B 695, Class 55 minimum.

Fastenings for wood foundations shall be as required in AF&PA Technical Report No. 7.

2304.9.6 Load path. Where wall framing members are not continuous from foundation sill to roof, the members shall be secured to ensure a continuous load path. Where required, sheet metal clamps, ties or clips shall be formed of galvanized steel or other approved corrosion-resistant material not less than 0.040 inch (1.01 mm) nominal thickness.

2304.9.7 Framing requirements. Wood columns and posts shall be framed to provide full end bearing. Alternatively, column-and-post end connections shall be designed to resist the full compressive loads, neglecting end-bearing capacity. Column-and-post end connections shall be fastened to resist lateral and net induced uplift forces.

2304.10 Heavy timber construction.

…

2304.11 Protection against decay and termites.

2304.11.1 General. Where required by this section, protection from decay and termites shall be provided by the use of naturally durable or preservative-treated wood.

2304.11.2 Wood used above ground. Wood used above ground in the locations specified in Sections 2304.11.2.1 through 2304.11.2.7, 2304.11.3 and 2304.11.5 shall be naturally durable wood or preservative-treated wood using water-borne preservatives, in accordance with AWPA U1 (Commodity Specifications A or F) for above-ground use.

2304.11.2.1 Joists, girders and subfloor. Where wood joists or the bottom of a wood structural floor without joists are closer than 18 inches (457 mm), or wood girders are closer than 12 inches (305 mm) to the exposed ground in crawl spaces or unexcavated areas located within the perimeter of the building foundation, the floor assembly (including posts, girders, joists and subfloor) shall be of naturally durable or preservative-treated wood.

2304.11.2.2 Wood supported by exterior foundation walls. Wood framing members, including wood sheathing, that rest on exterior foundation walls and are less than 8 inches (203 mm) from exposed earth shall be of naturally durable or preservative-treated wood.

Exception: [For DSA-SS and OSHPD 1, 2 and 4] *(Relocated from 2306A.4, 2001 CBC)* *~~Bottoms of sills and plywood, unless the plywood is treated in accordance with Section 2306A.8 on exterior foundation walls shall not be less than 12 inches (305 mm) above outside finished earth grade. On~~ At exterior walls where the earth is paved with an asphalt or concrete slab at least 18 inches (457 mm) wide and draining away from the building, the bottom of sills ~~may~~ are permitted to be 6 inches (152 mm) above the top of such slab. Other equivalent means of termite and decay protection may be accepted by the enforcement agency.*

2304.11.2.3 Exterior walls below grade. Wood framing members and furring strips attached directly to the interior of exterior masonry or concrete walls below grade shall be of approved naturally durable or preservative-treated wood.

2304.11.2.4 Sleepers and sills. Sleepers and sills on a concrete or masonry slab that is in direct contact with earth shall be of naturally durable or preservative-treated wood.

2304.11.2.4.1 [For DSA-SS and OSHPD 1, 2 and 4] Additional Requirements: *(Relocated from 2306A.4, 2001 CBC) Stud walls or partitions at shower or toilet rooms with more than two fixtures, and stud walls adjacent to unroofed paved areas shall rest on a concrete curb extending at least 6 inches (152 mm) above finished floor or pavement level.*

2304.11.2.5 Girder ends. The ends of wood girders entering exterior masonry or concrete walls shall be provided with a $^1/_2$-inch (12.7 mm) air space on top, sides and end, unless naturally durable or preservative-treated wood is used.

2304.11.2.6 Wood siding. Clearance between wood siding and earth on the exterior of a building shall not be less than 6 inches (152 mm) except where siding, sheathing and wall framing are of naturally durable or preservative-treated wood.

2304.11.2.7 Posts or columns. Posts or columns supporting permanent structures and supported by a concrete or masonry slab or footing that is in direct contact with the earth shall be of naturally durable or preservative-treated wood.

Exceptions:

1. Posts or columns that are either exposed to the weather or located in basements or cellars, supported by concrete piers or metal pedestals projected at least 1 inch (25 mm) above the slab or deck and 6 inches (152 mm) above exposed earth, and are separated therefrom by an impervious moisture barrier.
2. Posts or columns in enclosed crawl spaces or unexcavated areas located within the periphery of the building, supported by a concrete pier or metal pedestal at a height greater than 8 inches (203 mm) from exposed ground, and are separated therefrom by an impervious moisture barrier.

2304.11.3 Laminated timbers. The portions of glued-laminated timbers that form the structural supports of a building or other structure and are exposed to weather and not fully protected from moisture by a roof, eave or similar covering shall be pressure treated with preservative or be manufactured from naturally durable or preservative-treated wood.

2304.11.4 Wood in contact with the ground or fresh water. Wood used in contact with the ground (exposed earth) in the locations specified in Sections 2304.11.4.1 and 2304.11.4.2 shall be naturally durable (species for both decay and termite resistance) or preservative treated using water-borne preservatives in accordance with AWPA U1 (Commodity Specifications A or F) for soil or fresh water use.

Exception: Untreated wood is permitted where such wood is continuously and entirely below the ground-water level or submerged in fresh water.

2304.11.4.1 Posts or columns. Posts and columns supporting permanent structures that are embedded in concrete that is in direct contact with the earth, embedded in concrete that is exposed to the weather or in direct contact with the earth shall be of preservative-treated wood.

2304.11.4.2 Wood structural members. Wood structural members that support moisture-permeable floors or roofs that are exposed to the weather, such as concrete or masonry slabs, shall be of naturally durable or preservative-treated wood unless separated from such floors or roofs by an impervious moisture barrier.

2304.11.5 Supporting member for permanent appurtenances. Naturally durable or preservative-treated wood shall be utilized for those portions of wood members that form the structural supports of buildings, balconies, porches or similar permanent building appurtenances where such members are exposed to the weather without adequate protection from a roof, eave, overhang or other covering to prevent moisture or water accumulation on the surface or at joints between members.

Exception: When a building is located in a geographical region where experience has demonstrated that climatic conditions preclude the need to use durable materials where the structure is exposed to the weather.

2304.11.6 Termite protection. In geographical areas where hazard of termite damage is known to be very heavy, wood floor framing shall be of naturally durable species (termite resistant) or preservative treated in accordance with AWPA U1 for the species, product preservative and end use or provided with approved methods of termite protection.

2304.11.7 Wood used in retaining walls and cribs. Wood installed in retaining or crib walls shall be preservative treated in accordance with AWPA U1 (Commodity Specifications A or F) for soil and fresh water use.

2304.11.8 Attic ventilation. For attic ventilation, see Section 1203.2.

2304.11.9 Under-floor ventilation (crawl space). For under-floor ventilation (crawl space), see Section 1203.3.

2304.12 Long-term loading. Wood members supporting concrete, masonry or similar materials shall be checked for the effects of long-term loading using the provisions of the AF&PA NDS. The total deflection, including the effects of long-term loading, shall be limited in accordance with Section 1604.3.1 for these supported materials.

Exception: Horizontal wood members supporting masonry or concrete nonstructural floor or roof surfacing not more than 4 inches (102 mm) thick need not be checked for long-term loading.

Notation [For DSA-SS]:
Authority: Education Code Sections 17310, 81142; Health & Safety Code Section 16022
Reference(s): Education Code Sections 17280 - 17317, and 811130 - 81149; Health & Safety Code Sections 16000 – 16023

Notation [For OSHPD]:
Authority: Health and Safety Code Section 129850
Reference: Health and Safety Code Sections 1275, 129850 and 129790

SECTION 2305 - GENERAL DESIGN REQUIREMENTS FOR LATERAL-FORCE-RESISTING SYSTEMS

2305.1 General. Structures using wood shear walls and diaphragms to resist wind, seismic and other lateral loads shall be designed and constructed in accordance with the provisions of this section. Alternatively, compliance with the AF&PA SDPWS shall be permitted subject to the limitations therein and the limitations of this code.

…

2305.1.7 [For DSA-SS and OSHPD 1, 2 and 4] Additional Requirements: *The following limitations shall apply:*

1. *Straight-sheathed horizontal lumber diaphragms are not permitted.*
2. *Gypsum-based sheathing shear walls and portland cement plaster shear walls are not permitted.*
3. *Shear wall foundation anchor bolt washers (refer to Section 4.3.6.4.3 of the SDPWS) shall conform with the requirements of Section 2305.3.11.*
4. *The engineering analysis shall include a statement indicating whether the lateral force-resisting system has been designed in accordance with Section 2305, or in accordance with the AF&PA SDPWS and the limitations of this code.*

2305.2 Design of wood diaphragms.

…

2305.2.4 Construction. Wood diaphragms shall be constructed of wood structural panels manufactured with exterior glue and not less than 4 feet by 8 feet (1219 mm by 2438 mm), except at boundaries and changes in framing where minimum sheet dimension shall be 24 inches (610 mm) unless all edges of the undersized sheets are supported by and fastened to framing members or blocking. Wood structural panel thickness for horizontal diaphragms shall not be less than the valves set forth in Tables 2304.7(3), 2304.7(4) and 2304.7(5) for corresponding joist spacing and loads.

2305.2.4.1 Seismic Design Category F. Structures assigned to Seismic Design Category F shall conform to the additional requirements of this section.

Wood structural panel sheathing used for diaphragms and shear walls that are part of the seismic-force-resisting system shall be applied directly to the framing members.

Exception: Wood structural panel sheathing in a diaphragm is permitted to be fastened over solid lumber planking or laminated decking, provided the panel joints and lumber planking or laminated decking joints do not coincide.

2305.2.4.2 [For DSA-SS and OSHPD 1, 2 and 4] Additional Requirements. *(Relocated from 2315A.3.3, CBC 2001) Any wood structural panel sheathing used for diaphragms and shear walls that are part of the seismic force-resisting system shall be applied directly to framing members.*

Exception: *Wood structural panel sheathing in a diaphragm is permitted to be fastened over solid lumber planking or laminated decking, provided the panel joints and lumber planking or laminated decking joints do not coincide.*

2305.2.5 Rigid diaphragms.

…

2305.3 Design of wood shear walls.

…

Notation [For DSA-SS]:
Authority: Education Code Sections 17310, 81142; Health & Safety Code Section 16022

Reference(s): Education Code Sections 17280 - 17317, and 811130 - 81149; Health & Safety Code Sections 16000 – 16023

Notation [For OSHPD]:
Authority: Health and Safety Code Section 129850
Reference: Health and Safety Code Sections 1275, 129850 and 129790

SECTION 2306 - ALLOWABLE STRESS DESIGN

2306.1 Allowable stress design.

…

2306.2 Wind provisions for walls.

…

2306.3 Wood diaphragms.

2306.3.1 Wood structural panel diaphragms.

…

2306.3.2 Shear Capacities modifications

…

2306.3.3 Diagonally sheathed lumber diaphragms.

…

2306.3.4 Single diagonally sheathed lumber diaphragms.

…

2306.3.5 Double diagonally sheathed lumber diaphragms.

…

2306.3.6 Gypsum board diaphragm ceilings

…

2306.4 Shear walls. Panel sheathing joints in shear walls shall occur over studs or blocking. Adjacent panel sheathing joints shall occur over and be nailed to common framing members (see Section 2305.3.1 for limitations on shear wall bracing materials).

2306.4.1 Wood structural panel shear walls. The allowable shear capacities for wood structural panel shear walls shall be in accordance with Table 2306.4.1. These capacities are permitted to be increased 40 percent for wind design. Shear walls are permitted to be calculated by principles of mechanics without limitations by using values for nail strength given in the AF&PA NDS and wood structural panel design properties given in the *APA Panel Design Specification*.

TABLE 2306.4.1 ALLOWABLE SHEAR (POUNDS PER FOOT) FOR WOOD STRUCTURAL PANEL SHEAR WALLS WITH FRAMING OF DOUGLAS FIR-LARCH OR SOUTHERN PINE [a] FOR WIND OR SEISMIC LOADING [b, h, i, j, l, m]

PANEL GRADE	MINIMUM NOMINAL PANEL THICKNESS (inch)	MINIMUM FASTENERPENETRATIONIN FRAMING (inches)	PANELS APPLIED DIRECT TO FRAMING					PANELS APPLIED OVER 1/2″ OR 5/8″ GYPSUM SHEATHING [m]				
			NAIL (common or galvanized box) or staple size[k]	Fastener spacing at panel edges (inches)				NAIL (common or galvanized box) or staple size[k]	Fastener spacing at panel edges (inches)			
				6	4	3	2[e]		6	4	3	2[e]
Structural I Sheathing	5/16	1 1/4	6d (2×0.113″common, 2″ ×0.099″galvanized box)	200	300	390	510	8d (2 1/2″ ×0.131″common, 2 1/2″ ×0.113″galvanized box)	200	300	390	510
		1	1 1/2 16 Gage	165	245	325	415	2 16 Gage	125	185	245	315
	3/8	1 3/8	8d (2 1/2″ ×0.131″common, 2 1/2″ ×0.113″galvanized box)	230[d]	360[d]	460[d]	610[d]	10d (3″ ×0.148″common, 3″ ×0.128″galvanized box)	280	430	550[f]	730
		1	1 1/2 16 Gage	155	235	315	400	2 16 Gage	155	235	310	400
	7/16	1 3/8	8d (2 1/2″ ×0.131″common, 2 1/2″ ×0.113″galvanized box)	255[d]	395[d]	505[d]	670[d]	10d (3″ ×0.148″common, 3″ ×0.128″galvanized box)	280	430	550[f]	730
		1	1 1/2 16 Gage	170	260	345	440	2 16 Gage	155	235	310	400

	$^{15}/_{32}$	$1^{3}/_{8}$	8d ($2^{1}/_{2}$″ ×0.131″common, $2^{1}/_{2}$″ ×0.113″galvanized box)	280	430	550	730	10d (3″ ×0.148″common, 3″ ×0.1218″galvanized box)	280	430	550[f]	730
		1	$1^{1}/_{2}$16 Gage	185	280	375	475	2 16 Gage	155	235	300	400
		$1^{1}/_{2}$	10d (3″ ×0.148″common, 3″ ×0.128″galvanized box)	340	510	665[f]	870	10d (3″ ×0.148″common, 3″ ×0.128″galvanized box)	—	—	—	—
Sheathing, plywood siding[g]except Group 5 Species	$^{5}/_{16}$or$^{1}/_{4}$[c]	$1^{1}/_{4}$	6d (2″ ×0.113″common, 2″ ×0.099″galvanized box)	180	270	350	450	8d ($2^{1}/_{2}$″ ×0.131″common, $2^{1}/_{2}$″ ×0.113″galvanized box)	180	270	350	450
		1	$1^{1}/_{2}$16 Gage	145	220	295	375	2 16 Gage	110	165	220	285
	$^{3}/_{8}$	$1^{1}/_{4}$	6d (2″ ×0.113″common, 2″ ×0.099″galvanized box)	200	300	390	510	8d ($2^{1}/_{2}$″ ×0.131″common, $2^{1}/_{2}$″ ×0.113″galvanized box)	200	300	390	510
		$1^{3}/_{8}$	8d ($2^{1}/_{2}$″ ×0.131″common, $2^{1}/_{2}$″ ×0.113″galvanized box)	220[d]	320[d]	410[d]	530[d]	10d (3″ ×0.148″common, 3″ ×0.128″galvanized box)	260	380	490[f]	640
		1	$1^{1}/_{2}$16 Gage	140	210	280	360	2 16 Gage	140	210	280	360
	$^{7}/_{16}$	$1^{3}/_{8}$	8d ($2^{1}/_{2}$″ ×0.131″common, $2^{1}/_{2}$″ ×0.113″galvanized box)	240[d]	350[d]	450[d]	585[d]	10d (3″ ×0.148″common, 3″ ×0.128″galvanized box)	260	380	490[f]	640
		1	$1^{1}/_{2}$16 Gage	155	230	310	395	2 16 Gage	140	210	280	360

	$^{15}/_{32}$	$1^{3}/_{8}$	8d ($2^{1}/_{2}$″ ×0.131″common, $2^{1}/_{2}$″ ×0.113″galvanized box)	260	380	490	640	10d (3″ ×0.148″common, 3″ ×0.128″galvanized box)	260	380	490[f]	640
		$1^{1}/_{2}$	10d (3″ ×0.148″common, 3″ ×0.128” galvanized box)	310	460	600[f]	770	—	—	—	—	—
		1	$1^{1}/_{2}$16 Gage	170	255	335	430	2 16 Gage	140	210	280	360
	$^{19}/_{32}$	$1^{1}/_{2}$	10d (3″ ×0.148″common, 3″ ×0.128″galvanized box)	340	510	665[f]	870	—	—	—	—	—
		1	$1^{3}/_{4}$16 Gage	185	280	375	475	—	—	—	—	—
			Nail Size (galvanized casing)					Nail Size (galvanized casing)				
	$^{5}/_{16}$[c]	$1^{1}/_{4}$	6d (2″ ×0.099″)	140	210	275	360	8d ($2^{1}/_{2}$″ ×0.113″)	140	210	275	360
	$^{3}/_{8}$	$1^{3}/_{8}$	8d ($2^{1}/_{2}$″ ×0.113″)	160	240	310	410	10d (3″ ×0.128″)	160	240	310[f]	410

(continued)

Notes to Table 2306.4.1

For SI: 1 inch = 25.4 mm, 1 pound per foot = 14.5939 N/m.

a. For framing of other species: (1) Find specific gravity for species of lumber in AF&PA NDS. (2) For staples find shear value from table above for Structural I panels (regardless of actual grade) and multiply value by 0.82 for species with specific gravity of 0.42 or greater, or 0.65 for all other species. (3) For nails find shear value from table above for nail size for actual grade and multiply value by the following adjustment factor: Specific Gravity Adjustment Factor = [1-(0.5 - SG)], where SG = Specific Gravity of the framing lumber. This adjustment factor shall not be greater than 1.

b. Panel edges backed with 2-inch nominal or wider framing. Install panels either horizontally or vertically. Space fasteners maximum 6 inches on center along intermediate framing members for $^{3}/_{8}$-inch and $^{7}/_{16}$-inch panels installed on studs spaced 24 inches on center. For other conditions and panel thickness, space fasteners maximum 12 inches on center on intermediate supports.

c. $^{3}/_{8}$-inch panel thickness or siding with a span rating of 16 inches on center is the minimum recommended where applied direct to framing as exterior siding.

d. Allowable shear values are permitted to be increased to values shown for $^{15}/_{32}$-inch sheathing with same nailing provided (a) studs are spaced a maximum of 16 inches on center, or (b) panels are applied with long dimension across studs.

e. Framing at adjoining panel edges shall be 3 inches nominal or wider, and nails shall be staggered where nails are spaced 2 inches on center.

f. Framing at adjoining panel edges shall be 3 inches nominal or wider, and nails shall be staggered where both of the following conditions are met: (1) 10d (3″ × 0.148″) nails having penetration into framing of more than 1 $^{1}/_{2}$ inches and (2) nails are spaced 3 inches on center.

g. Values apply to all-veneer plywood. Thickness at point of fastening on panel edges governs shear values.

h. Where panels applied on both faces of a wall and nail spacing is less than 6 inches o.c. on either side, panel joints shall be offset to fall on different framing members, or framing shall be 3-inch nominal or thicker at adjoining panel edges and nails on each side shall be staggered.

i. In Seismic Design Category D, E or F, where shear design values exceed 350 pounds per linear foot, all framing members receiving edge nailing from abutting panels shall not be less than a single 3-inch nominal member, or two 2-inch nominal members fastened together in accordance with Section 2306.1 to transfer the design shear value between framing members. Wood structural panel joint and sill plate nailing shall be staggered in all cases. See Section 2305.3.11 for sill plate size and anchorage requirements.

j. Galvanized nails shall be hot dipped or tumbled.

k. Staples shall have a minimum crown width of $^{7}/_{16}$ inch and shall be installed with their crowns parallel to the long dimension of the framing members.

l. For shear loads of normal or permanent load duration as defined by the AF&PA NDS, the values in the table above shall be multiplied by 0.63 or 0.56, respectively.

m. ***[For DSA-SS and OSHPD 1, 2 and 4]*** *Refer to Section 2305.2.4.2, which requires any wood structural panel sheathing used for diaphragms and shear walls that are part of the seismic force-resisting system to be applied directly to framing members.*

2306.4.2 Lumber sheathed shear walls. Single and double diagonally sheathed lumber diaphragms are permitted using the construction and allowable load provisions of Sections 2306.3.4 and 2306.3.5.

2306.4.3 Particleboard shear walls

…

2306.4.4 Fiberboard shear walls.

…

2306.4.5 Shear walls sheathed with other materials. Shear capacities for walls sheathed with lath, plaster or gypsum board shall be in accordance with Table 2306.4.5. Shear walls sheathed with lath, plaster or gypsum board

shall be constructed in accordance with Chapter 25 and Section 2306.4.5.1. Walls resisting seismic loads shall be subject to the limitations in Section 12.2.1 of ASCE 7.

[For DSA-SS and OSHPD 1, 2 and 4] Exception: *Not permitted by DSA-SS and OSHPD.*

…

Notation [For DSA-SS]:
Authority: Education Code Sections 17310, 81142; Health & Safety Code Section 16022
Reference(s): Education Code Sections 17280 - 17317, and 811130 - 81149; Health & Safety Code Sections 16000 – 16023

Notation [For OSHPD]:
Authority: Health and Safety Code Section 129850
Reference: Health and Safety Code Sections 1275, 129850 and 129790

SECTION 2307 - LOAD AND RESISTANCE FACTOR DESIGN

2307.1 Load and resistance factor design. The structural analysis and construction of wood elements and structures using load and resistance factor design shall be in accordance with AF&PA NDS.

2307.1.1 Wood structural panel shear walls. In Seismic Design Category D, E or F, where shear design values exceed 490 pounds per foot (7154 N/m), all framing members receiving edge nailing from abutting panels shall not be less than a single 3-inch (76 mm) nominal member or two 2-inch (51 mm) nominal members fastened together in accordance with AF&PA NDS to transfer the design shear value between framing members. Wood structural panel joint and sill plate nailing shall be staggered in all cases. See Section 2305.3.11 for sill plate size and anchorage requirements.

SECTION 2308 CONVENTIONAL LIGHT-FRAME CONSTRUCTION

2308.1 General. The requirements of this section are intended for conventional light-frame construction. Other methods are permitted to be used, provided a satisfactory design is submitted showing compliance with other provisions of this code. Interior nonload-bearing partitions, ceilings and curtain walls of conventional light-frame construction are not subject to the limitations of this section. Alternatively, compliance with AF&PA WFCM shall be permitted subject to the limitations therein and the limitations of this code. Detached one- and two-family dwellings and multiple single-family dwellings (townhouses) not more than three stories above grade plane in height with a separate means of egress and their accessory structures shall comply with the *International Residential Code*.

2308.1.1 Portions exceeding limitations of conventional construction. When portions of a building of otherwise conventional construction exceed the limits of Section 2308.2, these portions and the supporting load path shall be designed in accordance with accepted engineering practice and the provisions of this code. For the purposes of this section, the term "portions" shall mean parts of buildings containing volume and area such as a room or a series of rooms.

2308.2 Limitations. Buildings are permitted to be constructed in accordance with the provisions of conventional light-frame construction, subject to the following limitations, and to further limitations of Sections 2308.11 and 2308.12.

1. Buildings shall be limited to a maximum of three stories above grade. For the purposes of this section, for buildings in Seismic Design Category D or E as determined in Section 1613, cripple stud walls shall be considered to be a story.

   Exception: Solid blocked cripple walls not exceeding 14 inches (356 mm) in height need not be considered a story.

2. Bearing wall floor-to-floor heights shall not exceed a stud height of 10 feet (3048 mm) plus a height of floor framing not to exceed 16 inches (406 mm).

3. Loads as determined in Chapter 16 shall not exceed the following:

   3.1. Average dead loads shall not exceed 15 psf (718 N/m^2) for combined roof and ceiling, exterior walls, floors and partitions.

   Exceptions:

   1. Subject to the limitations of Sections 2308.11.2 and 2308.12.2, stone or masonry veneer up to the lesser of 5 inches (127 mm) thick or 50 psf (2395 N/m^2) and installed in accordance with

Chapter 14 is permitted to a height of 30 feet (9144 mm) above a noncombustible foundation, with an additional 8 feet (2438 mm) permitted for gable ends.

2. Concrete or masonry fireplaces, heaters and chimneys shall be permitted in accordance with the provisions of this code.

3.2. Live loads shall not exceed 40 psf (1916 N/m^2) for floors.

3.3. Ground snow loads shall not exceed 50 psf (2395 N/m^2).

4. Wind speeds shall not exceed 100 miles per hour (mph) (44 m/s) (3-second gust).

Exception: Wind speeds shall not exceed 110 mph (48.4 m/s) (3-second gust) for buildings in Exposure Category B.

5. Roof trusses and rafters shall not span more than 40 feet (12 192 mm) between points of vertical support.

6. The use of the provisions for conventional light-frame construction in this section shall not be permitted for Occupancy Category IV buildings assigned to Seismic Design Category B, C, D, E or F, as determined in Section 1613.

7. Conventional light-frame construction is limited in irregular structures in Seismic Design Category D or E, as specified in Section 2308.12.6.

8. [For DSA-SS and OSHPD 1, 2 and 4] *(Relocated from 2320A.1, CBC 2001) The use of conventional light-frame construction provisions in this section is permitted, subject to the following conditions:*

8.1. The design and construction shall also comply with Section 2304 and Section 2305.

8.2. In conjunction with the use of provisions in Section 2308.3 (Braced Wall Lines), engineering analysis shall be furnished that demonstrates compliance of lateral-force-resisting systems with Section 2305.

8.3. In addition to the use of provisions in Section 2308.8 (Floor Joists), engineering analysis shall be furnished that demonstrates compliance of floor framing elements and connections with Section 2301.2, Item 1 or 2.

8.4. In addition to the use of provisions in Section 2308.9 (Wall Framing), engineering analysis shall be furnished that demonstrates compliance of wall framing elements and connections with Section 2301.2, Item 1 or 2.

8.5. In addition to the use of provisions in Section 2308.10 (Roof and Ceiling Framing), engineering analysis shall be furnished demonstrating compliance of roof and ceiling framing elements and connections with Section 2301.2, Item 1 or 2.

2308.2.1 Basic wind speed greater than 100 mph (3-second gust). Where the basic wind speed exceeds 100 mph (3-second gust), the provisions of either AF&PA WFCM, or the SBCCI SSTD 10 are permitted to be used.

2308.2.2 Buildings in Seismic Design Category B, C, D or E. Buildings of conventional light-frame construction in Seismic Design Category B or C, as determined in Section 1613, shall comply with the additional requirements in Section 2308.11.

Buildings of conventional light-frame construction in Seismic Design Category D or E, as determined in Section 1613, shall comply with the additional requirements in Section 2308.12.

2308.3 Braced wall lines.

…

2308.4 Design of elements.

…

2308.5 Connections and fasteners.

...

2308.6 Foundation plates or sills.

…

2308.7 Girders.

…

2308.8 Floor joists.

…

2308.9 Wall framing.

…

2308.10 Roof and ceiling framing.

…

2308.11 Additional requirements for conventional construction in Seismic Design Category B or C.

…

2308.12 Additional requirements for conventional construction in Seismic Design Category D or E.

…

Notation [For DSA-SS]:
Authority: Education Code Sections 17310, 81142; Health & Safety Code Section 16022
Reference(s): Education Code Sections 17280 - 17317, and 811130 - 81149; Health & Safety Code Sections 16000 – 16023

Notation [For OSHPD]:
Authority: Health and Safety Code Section 129850
Reference: Health and Safety Code Sections 1275, 129850 and 129790

Chapter 24 - Glass and Glazing

2001 CBC	PROPOSED ADOPTION	OSHPD				DSA-SS	Comments
		1	2	3	4		
	Adopt entire chapter without amendments		X	X			
	Adopt entire chapter with amendments listed below	X			X	X	
	Adopt only those sections listed below						
2402a	*2403.1.1 CA*	X			X	X	Relocated existing California Building Standards into IBC format
2404a	*2403.2.1 CA*	X			X	X	Relocated existing California Building Standards into IBC format
Table 24-B	*Table 2403.2.1 CA*	X			X	X	Relocated existing California Building Standards into IBC format
2403	*2403.6*	X			X	X	Relocated existing California Building Standards into IBC format
Table 24-D	*Table 2403.6 CA*	X			X	X	Relocated existing California Building Standards into IBC format
2406.1	*2406.1.5*	X			X	X	Relocated existing California Building Standards into IBC format
Table 24-C	*Table 2406.1.5 CA*	X			X	X	Relocated existing California Building Standards into IBC format

REPEAL OF EXISTING CALIFORNIA AMENDMENTS IN PART OR IN WHOLE THAT ARE NO LONGER NECESSARY AS FOLLOWS:

2001 CBC SECTION 2406A – SAFETY GLAZING: Repeal amendments in following subsections.

~~2406.2~~ and ~~2406.3~~.

Notation [For DSA-SS]:
Authority: Education Code Sections 17310, 81142; Health & Safety Code Section 16022
Reference(s): Education Code Sections 17280 - 17317, and 811130 - 81149; Health & Safety Code Sections 16000 – 16023

Notation [For OSHPD]:
Authority: Health and Safety Code Section 129850
Reference: Health and Safety Code Sections 1275, 129850 and 129790

EXPRESS TERMS

SECTION 2401 - GENERAL

2401.1 Scope. The provisions of this chapter shall govern the materials, design, construction and quality of glass, light-transmitting ceramic and light-transmitting plastic panels for exterior and interior use in both vertical and sloped applications in buildings and structures.

…

SECTION 2403 - GENERAL REQUIREMENTS FOR GLASS

2403.1 Identification. Each pane shall bear the manufacturer's mark designating the type and thickness of the glass or glazing material. The identification shall not be omitted unless approved and an affidavit is furnished by the glazing contractor certifying that each light is glazed in accordance with approved construction documents that comply with the provisions of this chapter. Safety glazing shall be identified in accordance with Section 2406.2.

Each pane of tempered glass, except tempered spandrel glass, shall be permanently identified by the manufacturer. The identification mark shall be acid etched, sand blasted, ceramic fired, laser etched, embossed or of a type that, once applied, cannot be removed without being destroyed.

Tempered spandrel glass shall be provided with a removable paper marking by the manufacturer.

2403.1.1 Additional Requirements. *(Relocated from 2402a, CBC 2001)* ***[For DSA-SS and OSHPD 1 and 4]*** *Each light of safety glazing material installed in hazardous locations as defined in Section 2406 of this chapter shall be identified by a label which will specify the labeler, whether the manufacturer or installer, and state that safety glazing material has been utilized in such installations. The label shall be legible and visible from the inside of the building after installation and shall specify that the label shall not be removed.*

~~EXCEPTION: Tempered glass shall have an etched manufacturer's label.~~

2403.2 Glass supports. Where one or more sides of any pane of glass are not firmly supported, or are subjected to unusual load conditions, detailed construction documents, detailed shop drawings and analysis or test data assuring safe performance for the specific installation shall be prepared by a registered design professional.

2403.2.1 Additional Requirements. *(Relocated from 2404.1a, CBC 2001)* ***[For DSA-SS and OSHPD 1 and 4]*** *In addition to the requirements of Section 2403.2, glass supports shall comply with the following:*

1. The construction documents and analysis or test data required per Section 2403.2 shall be submitted to the enforcement agency for approval.

2. Glass firmly supported on all four edges shall be glazed with minimum laps and edge clearances set forth in Table ~~24-B~~ 2403.2.1. ~~…. enforcement agency for….. Glass supports shall be considered firm when deflection of the support at design load does not exceed 1/175 of the span.~~

(Relocated from Table 24-B, CBC 2001) ***TABLE ~~24-B~~ 2403.2.1 – MINIMUM GLAZING REQUIREMENTS***

Fixed Windows and Openable Windows Other Than Horizontal Siding					
GLASS AREA	***UP TO 6 SQ. FT.***	***6 TO 14 SQ. FT.***	***14 TO 32 SQ. FT.***	***32 TO 50 SQ. FT.***	***OVER 50 SQ. FT.***
× 0.0929 for m^2, × 25.4 for mm					
1.Minimum Frame Lap	*1/4"*	*1/4"*	*5/16"*	*3/8"*	*1/2"*
2.Minimum Glass Edge Clearance	*1/8"[1,2]*	*1/8"[1,2]*	*3/16"[1]*	*1/4"*	*1/4"[1]*
3. Continuous Glazing Rabbet and Glass Retainer[3]	*Required*				

4. Resilient Setting Material[4]	*Not Required*	*Required*		
Sliding Doors and Horizontal Sliding Windows				
GLASS AREA	*UP TO 14 SQ. FT.*	*14 TO 32 SQ. FT.*	*32 TO 50 SQ. FT.*	*OVER 50 SQ. FT.*
× 0.0929 for m^2, × 25.4 for mm				
5.Minimum Glass Frame Lap	*1/4"*	*5/16"*	*3/8"*	*1/2"*
6.Minimum Glass Edge Clearance	*1/8"[2]*	*3/16"*	*1/4"*	*1/4"*
7. Continuous Glazing Rabbet and Glass Retainer[3]	*Required above third story*	*Required*		
8. Resilient Setting Material[4]	*Not Required*		*Required*	

[1] Glass edge clearance in fixed openings shall not be less than required to provide for wind and earthquake drift.

[2] Glass edge clearance at all sides of pane shall be a minimum of 3/16 inch (4.8 mm) where height of glass exceeds 3 feet (914 mm).

[3] Glass retainers such as metal, wood or vinyl face stops, glazing beads, gaskets, glazing clips and glazing channels shall be of sufficient strength and fixation to serve this purpose.

[4] Resilient setting material shall include preformed rubber or vinyl plastic gaskets or other materials which are proved to the satisfaction of the building official to remain resilient.

…

2403.6 *(Relocated from 2403, CBC 2001)* ***[For DSA-SS and OSHPD 1 and 4] Additional Requirements.***
~~Special~~ Glazing materials shall ~~also~~ meet the requirements of Table ~~24-D~~ 2403.6.

(Relocated from Table 24-D, CBC 2001) ***TABLE ~~24-D~~ 2403.6 – [For DSA-SS and OSHPD 1 and 4] ADDITIONAL REQUIREMENTS FOR ~~APPLICATION OF SPECIAL~~ GLAZING MATERIALS***

GLAZING MATERIALS	***SIZE OF INDIVIDUAL GLAZED AREA***	***REQUIREMENTS***
Annealed glass (regular plate, float, sheet, rolled or obscure)	*Over 6 square feet (0.56 m^2)*	*Not less than 3/16 inch (4.8 mm) nominal thickness. Each glazed area must be protected by protective grille or push bar[1] firmly attached to stiles on each exposed side.*
Annealed glass (regular plate, float, sheet, rolled or obscure) face sandblasted, etched or otherwise Depreciated	*Over 6 square feet (0.56 m^2)*	*Not less than 7/32 inch (5.6 mm) nominal thickness. Each glazed area must be protected by protective grille or push bar1 firmly attached to stiles on each exposed side.*
Fully tempered glass *Laminated glass* *Wire glass (obscure, patterned or transparent)* *Transparent rigid plastic*	*All sizes*	*Shall pass the text requirements of ANSI Z97.1.*

[1]Shall be constructed and attached in such a manner so as to limit or prevent human impact from being delivered to glass surface.

…

Notation [For DSA-SS]:
Authority: Education Code Sections 17310, 81142; Health & Safety Code Section 16022
Reference(s): Education Code Sections 17280 - 17317, and 811130 - 81149; Health & Safety Code Sections 16000 – 16023

Notation [For OSHPD]:
Authority: Health and Safety Code Section 129850
Reference: Health and Safety Code Sections 1275, 129850 and 129790

SECTION 2406 – SAFETY GLAZING

2406.1 Human impact loads. Individual glazed areas, including glass mirrors, in hazardous locations as defined in Section 2406.3 shall comply with Sections 2406.1.1 through 2406.1.~~4~~5.

2406.1.5 Additional Requirements. [For DSA-SS and OSHPD 1 and 4] *In additional to the requirements of Section 2406.1, glazing shall also comply with Tables 2403.6 and 2406.1.5.*

(Relocated from Table 24-C, CBC 2001) ***TABLE ~~24-C~~ 2406.1.5 – [For DSA-SS and OSHPD 1 and 4] IMPACT LOADS - GLAZING***

SPECIFIC HAZARDOUS LOCATIONS	***SIZE OF INDIVIDUAL GLAZED AREA***	***REQUIREMENTS [1,2]***
Glazing in exit and entrance doors and fixed glazed panels	*Over 6 square feet (0.56 m^2)*	*Each glazed area shall pass the test requirements of ANSI Z97.1 if not protected by a protective grille or push bar[3] firmly attached to stiles on each exposed side*
Glazing in storm doors	*Over 2 square feet (0.186 m^2)*	*Each glazed area shall pass the test requirements of ANSI Z97.1 if not protected by a protective grille firmly attached to stiles on each exposed side.*
Glazing in sliding doors (both fixed and sliding panels)	*Over 6 square feet (0.56 m^2)*	*Each glazed area shall pass the test requirements of ANSI Z97.1.*
Glass in all unframed doors (swinging)	*All sizes*	*Shall be fully tempered glass and pass the test requirements of ANSI Z97.1.*
Glazing in shower doors and tub enclosures	*All sizes*	*Shall pass the test requirements of ANSI Z97.1.*

[1] Annealed glass less than single strength (SS) in thickness shall not be used.

[2] If short dimension is larger than 24 inches (610 mm), annealed glass must be doubled strength (DS) or thicker.

[3] Shall be constructed and attached in such a manner so as to limit or prevent human impact from being delivered to glass surface.

…

Notation [For DSA-SS]:
Authority: Education Code Sections 17310, 81142; Health & Safety Code Section 16022
Reference(s): Education Code Sections 17280 - 17317, and 811130 - 81149; Health & Safety Code Sections 16000 – 16023

Notation [For OSHPD]:
Authority: Health and Safety Code Section 129850
Reference: Health and Safety Code Sections 1275, 129850 and 129790

Chapter 25
Gypsum Board and Plaster

2001 CBC	PROPOSED ADOPTION	OSHPD				DSA-SS	Comments
		1	2	3	4		
	Adopt entire chapter without amendments		X	X			
	Adopt entire chapter with amendments listed below	X			X	X	
	Adopt only those sections listed below						
2501A.1	*2501.2 CA*	X			X	X	
	2503.2, Item 1 CA	X			X	X	Relocated existing California Building Standards into IBC format
2501A.2	*2503.2, Item 2 CA*	X			X	X	Relocated existing California Building Standards into IBC format
2501A.3	*2503.3, Item 3 CA*	X			X	X	
2501A.3	*2503.3, Item 4 CA*	X			X	X	
2503A.1 & 2504A.1	*2504.2 CA*	X			X	X	Relocated existing California Building Standards into IBC format
2504A.2	*2504.2.1 CA*	X			X	X	Relocated existing California Building Standards into IBC format
2513A	*2505.3 CA*	X			X	X	Relocated existing California Building Standards into IBC format
	2506.2.1.1 CA	X			X	X	
2505A.3 & 2506A.5	*2507.3 CA*	X			X	X	Relocated existing California Building Standards into IBC format
	2508.5.6	X			X	X	
2508A.8	*2510.7.1 CA*	X			X	X	

REPEAL OF EXISTING CALIFORNIA AMENDMENTS IN PART OR IN WHOLE THAT ARE NO LONGER NECESSARY AS FOLLOWS:

2001 CBC DIVISION I – GENERAL DESIGN REQUIREMENTS

~~2001 CBC SECTION 2501A – SCOPE:~~ Repeal all amendments in this section.

~~2001 CBC SECTION 2502A – MATERIALS:~~ Repeal all amendments in this section.

~~2001 CBC SECTION 2511A – MATERIALS:~~ Repeal all amendments in this section.

Notation [For DSA-SS]:
Authority: Education Code Sections 17310, 81142; Health & Safety Code Section 16022

Reference(s): Education Code Sections 17280 - 17317, and 811130 - 81149; Health & Safety Code Sections 16000 – 16023

Notation [For OSHPD]:
Authority: Health and Safety Code Section 129850
Reference: Health and Safety Code Sections 1275, 129850 and 129790

EXPRESS TERMS

SECTION 2501 - GENERAL

2501.1 Scope.

2501.1.1 General. Provisions of this chapter shall govern the materials, design, construction and quality of gypsum board, lath, gypsum plaster and cement plaster.

2501.1.2 Performance. Lathing, plastering and gypsum board construction shall be done in the manner and with the materials specified in this chapter, and when required for fire protection, shall also comply with the provisions of Chapter 7.

2501.1.3 Other materials. Other approved wall or ceiling coverings shall be permitted to be installed in accordance with the recommendations of the manufacturer and the conditions of approval.

2501.2 Additional Requirements. [For DSA-SS and OSHPD 1 and 4] *(Relocated from 2501A.1, 2001 CBC) Details of attachment for wall and ceiling coverings which are not provided for in ~~the UBC or in~~ these regulations shall be detailed in the approved plans and specifications.*

Notation [For DSA-SS]:
Authority: Education Code Sections 17310, 81142; Health & Safety Code Section 16022
Reference(s): Education Code Sections 17280 - 17317, and 811130 - 81149; Health & Safety Code Sections 16000 – 16023

Notation [For OSHPD]:
Authority: Health and Safety Code Section 129850
Reference: Health and Safety Code Sections 1275, 129850 and 129790

SECTION 2502 - DEFINITIONS

…

SECTION 2503 - INSPECTION

2503.1 Inspection. Lath and gypsum board shall be inspected in accordance with Section 109.3.5, *Appendix Chapter 1*.

2503.2 Additional requirements for inspection and testing. [For DSA-SS and OSHPD 1 and 4]

1. Lath and gypsum board shall be inspected in accordance with Appendix Chapter 1 and Title 24, Part 1.

2. (Relocated from 2501A.2) No lath or gypsum wallboard or their attachments shall be covered or finished until it has been inspected and approved by the inspector of record and/or special inspector.

3. (Relocated from 2501A.3) The enforcement agency may require tests to be made in accordance with approved standards to determine compliance with the provisions of these regulations.

4. (Relocated from 2501A.3) The testing of gypsum and gypsum products shall conform with standards listed in Table 2506.2.

Notation [For DSA-SS]:
Authority: Education Code Sections 17310, 81142; Health & Safety Code Section 16022
Reference(s): Education Code Sections 17280 - 17317, and 811130 - 81149; Health & Safety Code Sections 16000 – 16023

Notation [For OSHPD]:
Authority: Health and Safety Code Section 129850
Reference: Health and Safety Code Sections 1275, 129850 and 129790

SECTION 2504 - VERTICAL AND HORIZONTAL ASSEMBLIES

2504.1 Scope. The following requirements shall be met where construction involves gypsum board, lath and plaster in vertical and horizontal assemblies.

2504.1.1 Wood framing. Wood supports for lath or gypsum board, as well as wood stripping or furring, shall not be less than 2 inches (51 mm) nominal thickness in the least dimension.

Exception: The minimum nominal dimension of wood furring strips installed over solid backing shall not be less than 1 inch by 2 inches (25 mm by 51 mm).

2504.1.2 Studless partitions. The minimum thickness of vertically erected studless solid plaster partitions of $^{3}/_{8}$-inch (9.5 mm) and $^{3}/_{4}$-inch (19.1 mm) rib metal lath or $^{1}/_{2}$-inch-thick (12.7 mm) long-length gypsum lath and gypsum board partitions shall be 2 inches (51 mm).

2504.2 Additional Requirements. [For DSA-SS and OSHPD 1 and 4] *(Relocated from 2503A.1 and 2504A.1, 2001 CBC) In addition to the requirements of this section, the horizontal and vertical assemblies of plaster or gypsum board shall be designed to resist the loads specified in Chapter 16A ~~[for OSHPD] 16B~~ of this code. For wood framing, see Chapter 23 ~~A [for OSHPD]23B~~. For metal framing, see Chapter 22A ~~[for OSHPD 1] 22B~~. For suspended acoustical ceiling systems, see Section 2506. For gypsum construction see Section 2508.*

2504.2.1 *(Relocated from 2504A.2, 2001 CBC)* ***Wood Furring Strips.*** *Wood furring strips for ceilings fastened to floor or ceiling joist shall be nailed at each bearing with two common wire nails, one of which shall be a slant nail and the other a face nail, or by one nail having spirally grooved or annular grooved shanks approved by the enforcement agency for this purpose. All stripping nails shall penetrate not less than 1 3/4 inches (44.5 mm) into the member receiving the point. Holes in stripping at joints shall be subdrilled to prevent splitting.*

Where common wire nails are used to support horizontal wood stripping for plaster ceilings, such stripping shall be wire tied to the joists 4 feet (1219 mm) on center with two strands of No. 18 W&M gage galvanized annealed wire to an 8d common wire nail driven into each side of the joist 2 inches (51 mm) above the bottom of the joist or to each end of a 16d common wire nail driven horizontally through the joist 2 inches (51 mm) above the bottom of the joist, and the ends of the wire secured together with three twists of the wire.

Notation [For DSA-SS]:
Authority: Education Code Sections 17310, 81142; Health & Safety Code Section 16022
Reference(s): Education Code Sections 17280 - 17317, and 811130 - 81149; Health & Safety Code Sections 16000 – 16023

Notation [For OSHPD]:
Authority: Health and Safety Code Section 129850
Reference: Health and Safety Code Sections 1275, 129850 and 129790

SECTION 2505 - SHEAR WALL CONSTRUCTION

2505.1 Resistance to shear (wood framing). Wood-framed shear walls sheathed with gypsum board, lath and plaster shall be designed and constructed in accordance with Section 2306.4 and are permitted to resist wind and seismic loads. Walls resisting seismic loads shall be subject to the limitations in Section 12.2.1 of ASCE 7.

2505.2 Resistance to shear (steel framing). Cold-formed steel-framed shear walls sheathed with gypsum board and constructed in accordance with the materials and provisions of Section 2210.5 are permitted to resist wind and seismic loads. Walls resisting seismic loads shall be subject to the limitations in Section 12.2.1 of ASCE 7.

2505.3 (Relocated from 2513A, 2001 CBC) ***[For DSA-SS and OSHPD 1 and 4]*** *Section 2505.1 and 2505.2 are not permitted by DSA-SS and OSHPD.*

Notation [For DSA-SS]:
Authority: Education Code Sections 17310, 81142; Health & Safety Code Section 16022
Reference(s): Education Code Sections 17280 - 17317, and 811130 - 81149; Health & Safety Code Sections 16000 – 16023

Notation [For OSHPD]:
Authority: Health and Safety Code Section 129850
Reference: Health and Safety Code Sections 1275, 129850 and 129790

SECTION 2506 - GYPSUM BOARD MATERIALS

2506.1 General. Gypsum board materials and accessories shall be identified by the manufacturer's designation to indicate compliance with the appropriate standards referenced in this section and stored to protect such materials from the weather.

2506.2 Standards. Gypsum board materials shall conform to the appropriate standards listed in Table 2506.2 and Chapter 35 and, where required for fire protection, shall conform to the provisions of Chapter 7.

TABLE 2506.2 - GYPSUM BOARD MATERIALS AND ACCESSORIES

MATERIAL	STANDARD
Accessories for gypsum board	ASTM C 1047
Adhesives for fastening gypsum wallboard	ASTM C 557
Exterior soffit board	ASTM C 931
Fiber-reinforced gypsum panels	ASTM C 1278
Glass mat gypsum backing panel	ASTM C 1178
Glass mat gypsum substrate	ASTM C 1177
Gypsum backing board and gypsum shaftliner board	ASTM C 442
Gypsum ceiling board	ASTM C 1395
Gypsum sheathing	ASTM C 79
Gypsum wallboard	ASTM C 36
Joint reinforcing tape and compound	ASTM C 474; C 475
Nails for gypsum boards	ASTM C 514, F 547, F 1667
Predecorated gypsum board	ASTM C 960

Steel screws	ASTM C 954; C 1002
Steel studs, load bearing	ASTM C 955
Steel studs, nonload bearing	ASTM C 645
Standard specification for gypsum board	ASTM C 1396
Testing gypsum and gypsum products	ASTM C 22; C 472; C 473
Water-resistant gypsum backing board	ASTM C 630

2506.2.1 Other materials. Metal suspension systems for acoustical and lay-in panel ceilings shall conform with ASTM C 635 listed in Chapter 35 and Section 13.5.6 of ASCE 7 for installation in high seismic areas.

2506.2.1.1 Additional Requirements. ***[For DSA-SS and OSHPD 1 and 4]*** *In addition to the requirements of Section 2506.2.1 metal suspension systems shall comply with Section 13.5.6 of ASCE 7 as modified in Section 1614A.*

Notation [For DSA-SS]:
Authority: Education Code Sections 17310, 81142; Health & Safety Code Section 16022
Reference(s): Education Code Sections 17280 - 17317, and 811130 - 81149; Health & Safety Code Sections 16000 – 16023

Notation [For OSHPD]:
Authority: Health and Safety Code Section 129850
Reference: Health and Safety Code Sections 1275, 129850 and 129790

SECTION 2507 - LATHING AND PLASTERING

2507.1 General. Lathing and plastering materials and accessories shall be marked by the manufacturer's designation to indicate compliance with the appropriate standards referenced in this section and stored in such a manner to protect them from the weather.

2507.2 Standards. Lathing and plastering materials shall conform to the standards listed in Table 2507.2 and Chapter 35 and, where required for fire protection, shall also conform to the provisions of Chapter 7.

TABLE 2507.2 - LATH, PLASTERING MATERIALS AND ACCESSORIES

MATERIAL	STANDARD
Accessories for gypsum veneer base	ASTM C 1047
Blended cement	ASTM C 595
Exterior plaster bonding compounds	ASTM C 932
Gypsum base for veneer plasters	ASTM C 588
Gypsum casting and molding plaster	ASTM C 59

Gypsum Keene's cement	ASTM C 61
Gypsum lath	ASTM C 37
Gypsum plaster	ASTM C 28
Gypsum veneer plaster	ASTM C 587
Interior bonding compounds, gypsum	ASTM C 631
Lime plasters	ASTM C 5; C 206
Masonry cement	ASTM C 91
Metal lath	ASTM C 847
Plaster aggregates Sand Perlite Vermiculite	 ASTM C 35; C 897 ASTM C 35 ASTM C 35
Plastic cement	ASTM C 1328
Portland cement	ASTM C 150
Steel screws	ASTM C 1002; C 954
Steel studs and track	ASTM C 645; C 955
Welded wire lath	ASTM C 933
Woven wire plaster base	ASTM C 1032

2507.3 [For DSA-SS and OSHPD 1 and 4] Lath attachment to horizontal wood supports. *(Relocated from 2505A.3 and 2506A.5, 2001 CBC) Where interior or exterior lath is attached to horizontal wood supports, either of the following attachments shall be used in addition to the methods of attachment ~~set forth in Table 25A-C~~ described in referenced standards listed in Table 2507.2.*

1. *Secure lath to alternate supports with ties consisting of a double strand of No. 18 W & M gage galvanized annealed wire at one edge of each sheet of lath. Wire ties shall be installed not less than 3 inches (76 mm) back from the edge of each sheet and shall be looped around stripping, or attached to an 8d common wire nail driven into each side of the joist 2 inches (51 mm) above the bottom of the joist or to each end of a 16d common wire nail driven horizontally through the joist 2 inches (51 mm) above the bottom of the joist and the ends of the wire secured together with three twists of the wire.*

2. *Secure lath to each support with 1/2-inch-wide (12.7 mm), 1 1/2-inch-long (38mm) No. 9 W & M gage, ring shank, hook staple placed around a 10d common nail laid flat under the surface of the lath not more than 3 inches (76 mm) from edge of each sheet. Such staples may be placed over ribs of 3/8-inch (9.5 mm) rib lath or over back wire of welded wire fabric or other approved lath, omitting the 10d nails.*

Notation [For DSA-SS]:
Authority: Education Code Sections 17310, 81142; Health & Safety Code Section 16022
Reference(s): Education Code Sections 17280 - 17317, and 811130 - 81149; Health & Safety Code Sections 16000 – 16023

Notation [For OSHPD]:
Authority: Health and Safety Code Section 129850
Reference: Health and Safety Code Sections 1275, 129850 and 129790

SECTION 2508 - GYPSUM CONSTRUCTION

2508.1 General.

…

2508.2 Limitations.

…

2508.3 Single-ply applications.

…

2508.4 Joint treatment.
…

2508.5 Horizontal gypsum board diaphragm ceilings. Gypsum board shall be permitted to be used on wood joists to create a horizontal diaphragm ceiling in accordance with Table 2508.5.

TABLE 2508.5 - SHEAR CAPACITY FOR HORIZONTAL WOOD FRAMED GYPSUM BOARD DIAPHRAGM CEILING ASSEMBLIES

MATERIAL	THICKNESS OF MATERIAL (MINIMUM) (inches)	SPACING OF FRAMING MEMBERS (MAXIMUM) (inches)	SHEAR VALUE[a,b] (plf of ceiling)	MIMIMUM FASTENER SIZE
Gypsum board	$^{1}/_{2}$	16 o.c.	90	5d cooler or wallboard nail; $1^{5}/_{8}$-inch long; 0.086-inch shank; $^{15}/_{64}$-inch head[c]
Gypsum board	$^{1}/_{2}$	24 o.c.	70	5d cooler or wallboard nail; $1^{5}/_{8}$-inch long; 0.086-inch shank; $^{15}/_{64}$-inch head[c]

For SI: 1 inch = 25.4 mm, 1 pound per foot = 14.59 N/m.

a. Values are not cumulative with other horizontal diaphragm values and are for short-term loading due to wind or seismic loading. Values shall be reduced 25 percent for normal loading.

b. Values shall be reduced 50 percent in Seismic Design Categories D, E and F.

c. $1^{1}/_{4}$-inch, No. 6 Type S or W screws are permitted to be substituted for the listed nails.

2508.5.1 Diaphragm proportions. The maximum allowable diaphragm proportions shall be $1^{1}/_{2}$:1 between shear resisting elements. Rotation or cantilever conditions shall not be permitted.

2508.5.2 Installation. Gypsum board used in a horizontal diaphragm ceiling shall be installed perpendicular to ceiling framing members. End joints of adjacent courses of gypsum board shall not occur on the same joist.

2508.5.3 Blocking of perimeter edges. All perimeter edges shall be blocked using a wood member not less than 2-inch by 6-inch (51 mm by 159 mm) nominal dimension. Blocking material shall be installed flat over the top plate of the wall to provide a nailing surface not less than 2 inches (51 mm) in width for the attachment of the gypsum board.

2508.5.4 Fasteners. Fasteners used for the attachment of gypsum board to a horizontal diaphragm ceiling shall be as defined in Table 2508.5. Fasteners shall be spaced not more than 7 inches (178 mm) on center (o.c.) at all supports, including perimeter blocking, and not more than $^{3}/_{8}$ inch (9.5 mm) from the edges and ends of the gypsum board.

2508.5.5 Lateral force restrictions. Gypsum board shall not be used in diaphragm ceilings to resist lateral forces imposed by, masonry or concrete construction.

2508.5.6 [For DSA-SS and OSHPD 1 and 4] Diaphragm ceiling connection to partitions. *Gypsum board shall not be used in diaphragm ceilings to resist lateral forces imposed by partitions. Connection of diaphragm ceiling to the vertical lateral force resisting elements shall be designed and detailed to transfer lateral forces.*

Notation [For DSA-SS]:
Authority: Education Code Sections 17310, 81142; Health & Safety Code Section 16022

Reference(s): Education Code Sections 17280 - 17317, and 811130 - 81149; Health & Safety Code Sections 16000 – 16023

Notation [For OSHPD]:
Authority: Health and Safety Code Section 129850
Reference: Health and Safety Code Sections 1275, 129850 and 129790

SECTION 2509 - GYPSUM BOARD IN SHOWERS AND WATER CLOSETS

…

SECTION 2510 - LATHING AND FURRING FOR CEMENT PLASTER (STUCCO)

2510.1 General.

…

2510.2 Weather protection.

…

2510.3 Installation.

…

2510.4 Corrosion resistance.

…

2510.5 Backing.

…

2510.6 Water-resistive barriers.
…

2510.7 Preparation of masonry and concrete. Surfaces shall be clean, free from efflorescence, sufficiently damp and rough for proper bond. If the surface is insufficiently rough, approved bonding agents or a portland cement dash bond coat mixed in proportions of not more than two parts volume of sand to one part volume of portland cement or plastic cement shall be applied. The dash bond coat shall be left undisturbed and shall be moist cured not less than 24 hours.

> ***2510.7.1 [For DSA-SS and OSHPD 1 and 4] Additional Requirements.*** *(Relocated from 2508A.8, 2001 CBC) ~~Approved~~ Bonding agents shall conform with the provisions of United States Government Military Specifications MIL-B-19235.*

Notation [For DSA-SS]:
Authority: Education Code Sections 17310, 81142; Health & Safety Code Section 16022
Reference(s): Education Code Sections 17280 - 17317, and 811130 - 81149; Health & Safety Code Sections 16000 – 16023

Notation [For OSHPD]:
Authority: Health and Safety Code Section 129850
Reference: Health and Safety Code Sections 1275, 129850 and 129790

SECTION 2511 INTERIOR PLASTER

…

SECTION 2512 EXTERIOR PLASTER

…

SECTION 2513 EXPOSED AGGREGATE PLASTER

…

Notation [For DSA-SS]:
Authority: Education Code Sections 17310, 81142; Health & Safety Code Section 16022
Reference(s): Education Code Sections 17280 - 17317, and 811130 - 81149; Health & Safety Code Sections 16000 – 16023

Notation [For OSHPD]:
Authority: Health and Safety Code Section 129850
Reference: Health and Safety Code Sections 1275, 129850 and 129790

EXPRESS TERMS

CHAPTER 26 - PLASTIC

2001 CBC	PROPOSED ADOPTION	OSHPD				DSA-SS	Comments
		1	2	3	4		
	Adopt entire chapter without amendments	X	X	X	X	X	
	Adopt entire chapter with amendments listed below						
	Adopt only those sections listed below						

EXPRESS TERMS

SECTION 2601 - GENERAL

2601.1 Scope. These provisions shall govern the materials, design, application, construction and installation of foam plastic, foam plastic insulation, plastic veneer, interior plastic finish and trim and light-transmitting plastics. See Chapter 14 for requirements for exterior wall finish and trim.

…

SECTION 2602 – DEFINITIONS

…

SECTION 2603 - FOAM PLASTIC INSULATION

2603.1 General. The provisions of this section shall govern the requirements and uses of foam plastic insulation in buildings and structures.

…

2603.4 Thermal barrier. Except as provided for in Sections 2603.4.1 and 2603.9, foam plastic shall be separated from the interior of a building by an approved thermal barrier of 0.5-inch (12.7 mm) gypsum wallboard or equivalent thermal barrier material that will limit the average temperature rise of the unexposed surface to not more than 250°F (120°C) after 15 minutes of fire exposure, complying with the standard time-temperature curve of ASTM E 119. The thermal barrier shall be installed in such a manner that it will remain in place for 15 minutes based on FM 4880, UL 1040, NFPA 286 or UL 1715. Combustible concealed spaces shall comply with Section 717.

…

2603.4.1.12 Interior signs. Foam plastic used for interior signs in covered mall buildings in accordance with Section 402.15 shall be permitted without a thermal barrier. Foam plastic signs that are not affixed to interior building surfaces shall comply with Chapter 8 of the *International Fire Code*.

…

Notation [For DSA-SS]:
Authority: Education Code Sections 17310, 81142; Health & Safety Code Section 16022
Reference(s): Education Code Sections 17280 - 17317, and 811130 - 81149; Health & Safety Code

Sections 16000 – 16023

Notation [For OSHPD]:
Authority: Health and Safety Code Section 129850
Reference: Health and Safety Code Sections 1275, 129850 and 129790

CHAPTER 31 – SPECIAL CONSTRUCTION

2001 CBC	PROPOSED ADOPTION	OSHPD				DSA-SS	Comments
		1	2	3	4		
	Adopt entire chapter without amendments	X	X	X	X	X	
	Adopt entire chapter with amendments listed below						
	Adopt only those sections listed below						

REPEAL OF EXISTING CALIFORNIA AMENDMENTS IN PART OR IN WHOLE THAT ARE NO LONGER NECESSARY AS FOLLOWS:

~~2001 CBC CHAPTER 31 – SPECIAL CONSTRUCTION:~~ Repeal all amendments in this Chapter.

Notation [For DSA-SS]:
Authority: Education Code Sections 17310, 81142; Health & Safety Code Section 16022
Reference(s): Education Code Sections 17280 - 17317, and 811130 - 81149; Health & Safety Code Sections 16000 – 16023

Notation [For OSHPD]:
Authority: Health and Safety Code Section 129850
Reference: Health and Safety Code Sections 1275 129850, and 129790

EXPRESS TERMS

SECTION 3101 - GENERAL

3101.1 Scope. The provisions of this chapter shall govern special building construction including membrane structures, temporary structures, pedestrian walkways and tunnels, awnings and canopies, marquees, signs, and towers and antennas.

SECTION 3102 - MEMBRANE STRUCTURES

3102.1 General. The provisions of this section shall apply to air-supported, air-inflated, membrane-covered cable and membrane-covered frame structures, collectively known as membrane structures, erected for a period of 180 days or longer. Those erected for a shorter period of time shall comply with the *International Fire Code*. Membrane structures covering water storage facilities, water clarifiers, water treatment plants, sewage treatment plants, greenhouses and similar facilities not used for human occupancy, are required to meet only the requirements of Sections 3102.3.1 and 3102.7.

…

SECTION 3103 - TEMPORARY STRUCTURES

3103.1 General. The provisions of this section shall apply to structures erected for a period of less than 180 days. Tents and other membrane structures erected for a period of less than 180 days shall comply with the *International Fire Code*. Those erected for a longer period of time shall comply with applicable sections of this code.

…

Notation [For DSA-SS]:
Authority: Education Code Sections 17310, 81142; Health & Safety Code Section 16022

Reference(s): Education Code Sections 17280 - 17317, and 811130 - 81149; Health & Safety Code Sections 16000 – 16023

Notation [For OSHPD]:
Authority: Health and Safety Code Section 129850
Reference: Health and Safety Code Sections 1275 129850, and 129790

CHAPTER 33 – SAFEGUARD DURING CONSTRUCTION

2001 CBC	PROPOSED ADOPTION	OSHPD				DSA-SS	Comments
		1	2	3	4		
	Adopt entire chapter without amendments		X	X			
	Adopt entire chapter with amendments listed below	X			X	X	
	Adopt only those sections listed below						
3301.2a	*3307.2 CA*	X			X	X	Relocated existing California Building Standards into IBC format
3301.3	*3307.3 CA*	X			X	X	Relocated existing California Building Standards into IBC format

REPEAL OF EXISTING CALIFORNIA AMENDMENTS IN PART OR IN WHOLE THAT ARE NO LONGER NECESSARY AS FOLLOWS:

~~2001 CBC SECTION 3301.1 – DESIGN:~~ Repeal all amendments in this section.

Notation [For DSA-SS]:
Authority: Education Code Sections 17310, 81142; Health & Safety Code Section 16022
Reference(s): Education Code Sections 17280 - 17317, and 811130 - 81149; Health & Safety Code Sections 16000 – 16023

Notation [For OSHPD]:
Authority: Health and Safety Code Section 129850
Reference: Health and Safety Code Sections 1275, 129850 and 129790

EXPRESS TERMS

SECTION 3301 - GENERAL

3301.1 Scope. The provisions of this chapter shall govern safety during construction and the protection of adjacent public and private properties.

…

SECTION 3302 – CONSTRUCTION SAFEGUARDS

…

SECTION 3304 – SITE WORK

…

SECTION 3305 - SANITARY

3305.1 Facilities required. Sanitary facilities shall be provided during construction, remodeling or demolition activities in accordance with the ~~*International*~~ California *Plumbing Code*.

SECTION 3306 – PROTECTION OF PEDESTRIANS

…

SECTION 3307 - PROTECTION OF ADJOINING PROPERTY

3307.1 Protection Required.

…

3307.2 *(Relocated from 3301.2a, CBC 2001)* ***[For DSA-SS and OSHPD 1 and 4] Protection of Adjoining Property.*** *The requirements for protection of adjacent property and depth to which protection is required shall be as defined in Section 832, Civil Code.*

The owner or governing board shall be responsible to retain the services of a structural engineer and a geotechnical engineer to review the design of the support system for foundations of the existing buildings, or soil supporting any portion of the building. Where the underpinning or support system provides for the stability of the foundations of an existing hospital, essential services building, the system shall be designed and constructed to conform to all requirements of these regulations.

3307.3 *(Relocated from 3301.3, CBC 2001)* ***[For DSA-SS and OSHPD 1 and 4] Protection of Existing Buildings.*** *Where excavation for new construction affects the stability of the foundations or any portion of such existing building, a support system shall be provided. Such systems shall be considered a structural alteration to the existing building and shall be designed and constructed to conform to these regulations.*

…

Notation [For DSA-SS]:
Authority: Education Code Sections 17310, 81142; Health & Safety Code Section 16022
Reference(s): Education Code Sections 17280 - 17317, and 811130 - 81149; Health & Safety Code Sections 16000 – 16023

Notation [For OSHPD]:
Authority: Health and Safety Code Section 129850
Reference: Health and Safety Code Sections 1275, 129850 and 129790

SECTION 3308 – TEMPORARY USE OF STREETS, ALLEYS AND PUBLIC PROPERTY

…

SECTION 3309 - FIRE EXTINGUISHERS

[F] 3309.1 Where required.

…

3309.2 Fire hazards. The provisions of this code and the *International Fire Code* shall be strictly observed to safeguard against all fire hazards attendant upon construction operations.

…
SECTION 3310 – EXITS

…

[F] SECTION 3311 – STANDPIPES

…

SECTION 3312 – AUTOMATIC SPRINKLER SYSTEMS

…

Notation [For DSA-SS]:
Authority: Education Code Sections 17310, 81142; Health & Safety Code Section 16022
Reference(s): Education Code Sections 17280 - 17317, and 811130 - 81149; Health & Safety Code Sections 16000 – 16023

Notation [For OSHPD]:
Authority: Health and Safety Code Section 129850
Reference: Health and Safety Code Sections 1275, 129850 and 129790

CHAPTER 34 - EXISTING STRUCTURES

2001 CBC	PROPOSED ADOPTION	OSHPD		DSA-SS	Comments
		2	3		
	Adopt entire chapter without amendments		X		
	Adopt entire chapter with amendments listed below	X			
	Adopt only those sections listed below			X	
	3401.1			X	
	3401.1.1 CA				
	3401.1.2 CA			X	
	3403.2.3.3	X			
1640A	*3415 CA*			X	
1641A	*3416 CA*			X	
1642A	-				*1642A* to be repealed in it's entirety
1643A	*3417 CA*			X	
1644A	*3418 CA*			X	*1644A* (Method A) to be repealed in it's entirety; 3418 contains new provisions
1645A	-				*1645A* to be repealed in it's entirety
1646A	-				*1646A* to be repealed in it's entirety
1647A	-				*1647A* to be repealed in it's entirety
1648A	*3419 CA*			X	
1649A	*3420 CA*			X	
1650A	-				*1650A* to be repealed in it's entirety; new provisions contained in Sec. 3417.2
	3421 CA			X	

REPEAL OF EXISTING CALIFORNIA AMENDMENTS IN PART OR IN WHOLE THAT ARE NO LONGER NECESSARY AS FOLLOWS:

~~2001 CBC Chapter 35 – Existing Structures:~~ Repeal all amendments in this Chapter.

Notation [For OSHPD]:
Authority: Health and Safety Code Section 129850
Reference: Health and Safety Code Sections 1275 and 129850

EXPRESS TERMS

SECTION 3401 - GENERAL

3401.1 Scope. The provisions of this Chapter shall control the alteration, repair, addition and change of occupancy of existing structures*, including state-regulated structures in accordance with Sections 3401.1.1 and 3401.1.2.*

Exception: Existing bleachers, grandstands and folding and telescopic seating shall comply with ICC 300-02.

3401.1.1 *(reserved for state-owned building occupancies)*

3401.1.2 [For DSA-SS] Public School Buildings. *The provisions of Sections 3415 through 3421 establish minimum standards for earthquake evaluation and design for the rehabilitation of existing buildings for use as public school buildings under the jurisdiction of the Division of the State Architect - Structural Safety (DSA-SS, refer to Section 109.2).*

The provisions of Section 3415 through 3421 also establish minimum standards for earthquake evaluation and design for rehabilitation of existing public school buildings under the jurisdiction of DSA-SS.

3401.2 Maintenance.
…

3401.3 Compliance with other codes. Alterations, repairs, additions and changes of occupancy to existing structures shall comply with the provisions for alterations, repairs, additions and changes of occupancy in the *International Fire Code*, ~~*International Fuel Gas Code*~~, *California* ~~*International*~~ *Mechanical Code*, *California* ~~*International*~~ *Plumbing Code*, ~~*International Property Maintenance Code*, *International Private Sewage Disposal Code*~~, *International Residential Code* and *California* ~~*ICC*~~ *Electrical Code*.

Notation (For OSHPD):
Authority: Health and Safety Code Section 129850
Reference: Health and Safety Code Sections 1275 and 129850

Notation (For DSA-SS):
Authority: Education Code Sections 17280.5, 17310
Reference: Education Code Sections 17280 - 17317

SECTION 3402 - DEFINITIONS

3402.1 Definitions.
…

SECTION 3403 - ADDITIONS, ALTERATIONS OR REPAIRS

3403.1 Existing buildings or structures. Additions or alterations to any building or structure shall comply with the requirements of the code for new construction. Additions or alterations shall not be made to an existing building or structure that will cause the existing building or structure to be in violation of any provisions of this code. An existing building plus additions shall comply with the height and area provisions of Chapter 5. Portions of the structure not altered and not affected by the alteration are not required to comply with the code requirements for a new structure.

3403.1.1 Flood hazard areas. For buildings and structures in flood hazard areas established in Section 1612.3, any additions, alterations or repairs that constitute substantial improvement of the existing structure, as defined in Section 1612.2, shall comply with the flood design requirements for new construction, and all aspects of the existing structure shall be brought into compliance with the requirements for new construction for flood design.

3403.2 Structural. Additions or alterations to an existing structure shall not increase the force in any structural element by more than 5 percent, unless the increased forces on the element are still in compliance with the code for new structures, nor shall the strength of any structural element be decreased to less than that required by this code for new structures. Where repairs are made to structural elements of an existing building, and uncovered structural elements are found to be unsound or otherwise structurally deficient, such elements shall be made to conform to the requirements for new structures.

3403.2.1 Existing live load. Where an existing structure heretofore is altered or repaired, the minimum design loads for the structure shall be the loads applicable at the time of erection, provided that public safety is not endangered thereby.

3403.2.2 Live load reduction. If the approved live load is less than required by Section 1607, the areas designed for the reduced live load shall be posted with the approved load. Placards shall be of an approved design.

3403.2.3 Seismic. Additions, alterations or modification or change of occupancy of existing buildings shall be in accordance with this section for the purposes of seismic considerations.

3403.2.3.1 Additions to existing buildings. An addition that is structurally independent from an existing structure shall be designed and constructed with the seismic requirements for new structures. An addition that is not structurally independent from an existing structure shall be designed and constructed such that the entire structure conforms to the seismic-force-resistance requirements for new structures unless the following conditions are satisfied:

1. The addition conforms with the requirements for new structures,
2. The addition does not increase the seismic forces in any structural element of the existing structure by more than 10 percent cumulative since the original construction, unless the element has the capacity to resist the increased forces determined in accordance with ASCE 7, and
3. Additions do not decrease the seismic resistance of any structural element of the existing structure by more than 10 percent cumulative since the original construction, unless the element has the capacity to resist the forces determined in accordance with ASCE 7. If the building's seismic base shear capacity has been increased since the original construction, the percent change in base shear may be calculated relative to the increased value.

3403.2.3.2 Alterations. Alterations are permitted to be made to any structure without requiring the structure to comply with Section 1613 or 1609, provided the alterations conform to the requirements for a new structure. Alterations that increase the seismic force in any existing structural element by more than 10 percent cumulative since the original construction or decrease the design strength of any existing structural element to resist seismic forces by more than 5 percent cumulative since the original construction shall not be permitted unless the entire seismic-force-resisting system is determined to conform to ASCE 7 for a new structure. If the building's seismic base shear capacity has been increased since the original construction, the percent change in base shear may be calculated relative to the increased value.

Exception: Alterations to existing structural elements or additions of new structural elements that are not required by ASCE 7 and are initiated for the purpose of increasing the strength or stiffness of the seismic-force-resisting system of an existing structure need not be designed for forces conforming to ASCE 7, provided that an engineering analysis is submitted indicating the following:

1. The design strength of existing structural elements required to resist seismic forces is not reduced.
2. The seismic force to required existing structural elements is not increased beyond their design strength.
3. New structural elements are detailed and connected to the existing structural elements as required by Chapter 16.
4. New or relocated nonstructural elements are detailed and connected to existing or new structural elements as required by Chapter 16.
5. The alterations do not create a structural irregularity as defined in ASCE 7 or make an existing structural irregularity more severe.
6. The alterations do not result in the creation of an unsafe condition.

3403.2.3.3 ADOPTION [For OSHPD 2]: *All additions, alterations, repairs and seismic retrofit to the existing structures or portions thereof may be designed and constructed in accordance with the provisions of FEMA 356, as modified herein.*

3403.2.3.3.1 *All Reference Standards listed in FEMA 356 shall be replaced by Referenced Standards listed in Chapter 35 of this code.*

3403.2.3.3.2 FEMA 356 Section 1.5 – Target Building Performance. *Target building performance level shall be Life Safety Building Performance Level (3-C) as defined in Section 1.5.3.3, with Structural performance level S-3 as defined in Section 1.5.1.3 and Non-structural performance level N-C as defined in Section 1.5.2.3.*

3403.2.3.3.3 FEMA 356 Section 1.6 - Seismic Hazard. *The ground motion characterization shall be based on ground shaking having a 10 percent probability of exceedance in 50 years.*

Ground shaking having a 10 percent probability of exceedance in 50 years need not exceed 2/3 of the maximum considered earthquake.

Response spectra and acceleration time histories shall be constructed in accordance with sections 1613, 1802.7 & 1802.8.

3403A.2.3.3.4 *The selection of a particular analysis procedure from FEMA 356 may be subject to the approval of the enforcement agent.*

3403A.2.3.3.5 *Prior to implementation of FEMA 356 non-linear procedures – the ground motion, analysis and design methods, material assumptions and acceptance criteria proposed by the engineer shall be reviewed by the enforcement agent.*

3403A.2.3.3.6 *The analysis, conclusion and design decisions shall be reviewed and accepted by enforcement agent.*

3403A.2.3.3.7 Structural observation, testing and inspections. *Construction testing, inspection and structural observation requirements shall be as required for new construction.*

3403.3 Nonstructural. Nonstructural alterations or repairs to an existing building or structure are permitted to be made of the same materials of which the building or structure is constructed, provided that they do not adversely affect any structural member or the fire-resistance rating of any part of the building or structure.

3403.4 Stairways. An alteration or the replacement of an existing stairway in an existing structure shall not be required to comply with the requirements of a new stairway as outlined in Section 1009 where the existing space and construction will not allow a reduction in pitch or slope.

Notation (For OSHPD):
Authority: Health and Safety Code Section 129850
Reference: Health and Safety Code Sections 1275 and 129850

Notation (For DSA-SS):
Authority: Education Code Sections 17280.5, 17310
Reference: Education Code Sections 17280 - 17317

SECTION 3404 - FIRE ESCAPES

…

SECTION 3405 - GLASS REPLACEMENT

…

SECTION 3406 - CHANGE OF OCCUPANCY

…

SECTION 3407 - HISTORIC BUILDINGS

…

SECTION 3408 - MOVED STRUCTURES

…

SECTION 3409 - ACCESSIBILITY FOR EXISTING BUILDINGS

…

SECTION 3410 - COMPLIANCE ALTERNATIVES

3410.1 Compliance. The provisions of this section are intended to maintain or increase the current degree of public safety, health and general welfare in existing buildings while permitting repair, alteration, addition and change of occupancy without requiring full compliance with Chapters 2 through 33, or Sections 3401.3, and 3403 through 3407, except where compliance with other provisions of this code is specifically required in this section.

3410.2 Applicability. Structures existing prior to *January 1, 2008* ~~[DATE TO BE INSERTED BY THE JURISDICTION. NOTE: IT IS RECOMMENDED THAT THIS DATE COINCIDE WITH THE EFFECTIVE DATE OF BUILDING CODES WITHIN THE JURISDICTION~~], in which there is work involving additions, alterations or changes of occupancy shall be made to conform to the requirements of this section or the provisions of Sections 3403 through 3407. The provisions in Sections 3410.2.1 through 3410.2.5 shall apply to existing occupancies that will continue to be, or are proposed to be, in Groups A, B, E, F, M, R, S and U. These provisions shall not apply to buildings with occupancies in Group H or I.

….

3410.3.2 Compliance with other codes. Buildings that are evaluated in accordance with this section shall comply with the *California* ~~*International*~~ *Fire Code.* ~~*and International Property Maintenance Code.*~~

….

3410.6.7.1 Categories. The categories for HVAC systems are:

1. Category a — Plenums not in accordance with Section 602 of the *California* ~~*International*~~ *Mechanical Code.* -10 points.

2. Category b — Air movement in egress elements not in accordance with Section 1017.4. -5 points.

3. Category c — Both categories a and b are applicable. -15 points.

4. Category d — Compliance of the HVAC system with Section 1017.4 and Section 602 of the *California* ~~*International*~~ *Mechanical Code.* 0 points.

5. Category e — Systems serving one story; or a central boiler/chiller system without ductwork connecting two or more stories. 5 points.

….

3410.6.8 Automatic fire detection. Evaluate the smoke detection capability based on the location and operation of automatic fire detectors in accordance with Section 907 and the *California* ~~*International*~~ *Mechanical Code*. Under the categories and occupancies in Table 3410.6.8, determine the appropriate value and enter that value into Table 3410.7 under Safety Parameter 3410.6.8, Automatic Fire Detection, for fire safety, means of egress and general safety.

3410.6.8.1 Categories. The categories for automatic fire detection are:
1. Category a — None.
2. Category b — Existing smoke detectors in HVAC systems and maintained in accordance with the *California* ~~*International*~~ *Fire Code*.

3. Category c — Smoke detectors in HVAC systems. The detectors are installed in accordance with the requirements for new buildings in the *California ~~International~~ Mechanical Code*.

4. Category d — Smoke detectors throughout all floor areas other than individual sleeping units, tenant spaces and dwelling units.

5. Category e — Smoke detectors installed throughout the fire area.

. . . .

3410.6.14 Elevator control. Evaluate the passenger elevator equipment and controls that are available to the fire department to reach all occupied floors. Elevator recall controls shall be provided in accordance with the *International Fire Code*. Under the categories and occupancies in Table 3410.6.14, determine the appropriate value and enter that value into Table 3410.7 under Safety Parameter 3410.6.14, Elevator Control, for fire safety, means of egress and general safety. The values shall be zero for a single-story building.

3410.6.14.1 Categories. The categories for elevator controls are:
1. Category a — No elevator.
2. Category b — Any elevator without Phase I and II recall.
3. Category c — All elevators with Phase I and II recall as required by the *International Fire Code*.
4. Category d — All meet Category c; or Category b where permitted to be without recall; and at least one elevator that complies with new construction requirements serves all occupied floors.

...

Notation (For OSHPD):
Authority: Health and Safety Code Section 129850
Reference: Health and Safety Code Sections 1275 and 129850

Notation (For DSA-SS):
Authority: Education Code Sections 17280.5, 17310
Reference: Education Code Sections 17280 - 17317

SECTION 3411 – *(reserved for other state agencies)*
...

SECTION 3412 – *(reserved for other state agencies)*
...

SECTION 3413 – *(reserved for other state agencies)*
...

SECTION 3414 – *(reserved for other state agencies)*
...

SECTION 3415 - EARTHQUAKE EVALUATION AND DESIGN FOR RETROFIT OF EXISTING BUILDINGS

3415.1 Purpose.

3415.1.1 *(reserved for state-owned building occupancies)*

3415.1.2 Public School Buildings. *The provisions of Sections 3415 through 3421 establish minimum standards for earthquake evaluation and design for the rehabilitation of existing buildings for use as public school buildings under the jurisdiction of the Division of the State Architect - Structural Safety (DSA-SS, refer to Section 109.2).*

The provisions of Section 3415 through 3421 also establish minimum standards for earthquake evaluation and design for rehabilitation of existing public school buildings under the jurisdiction of DSA-SS.

Note: For public schools, where reference within this chapter is made to sections in chapters 16, 17, 18, 19, 21 or 22, the provisions in chapters 16A, 17A, 18A, 19A, 21A, and 22A respectively shall apply instead.

~~1640A.1~~ 3415.2 ~~Purpose~~ Scope. *All modifications, ~~alterations,~~ structurally connected additions, and/or repairs to existing structures or portions thereof shall, at a minimum, be designed and constructed to resist the effects of seismic ground motions as provided in this ~~division~~ Section. ~~When applicable,~~ The structural system shall be evaluated by ~~the design professional of record~~ a registered design professional and, if not meeting or exceeding the minimum seismic design performance requirements of this ~~division~~ Section, shall be retrofitted in compliance with these requirements.*

Exception: *Those structures for which Section 3415.3 determines that assessment is not required, or for which Section 3415.4 determines that retrofit is not needed, then only the requirements of Section 3415.11 apply.*

~~1640A.1 excerpt [For DSA/SS]~~ *~~For rehabilitation of any existing buildings, the structural system shall be evaluated by the design professional in responsible charge of design and, if not meeting or exceeding the minimum seismic design purpose of this division, shall be designed and retrofitted in compliance with these requirements. Elements of structures, nonstructural components and equipment shall be evaluated and retrofitted to the seismic requirements of this division.~~*

~~1640A.2~~ 3415.3 Applicability.

*(**3415.3.1** reserved for state-owned buildings)*

3415.3.2 Public School Buildings. *For public schools, the provisions of Section 3415 apply when required in accordance with Sections 4-307 and 4-309 (c), Title 24, Part 1.*

~~1640A.2 [For DSA/SS]~~ *~~The requirements of this division apply to the rehabilitation of existing buildings for public school use as required per Section 4-307, Article 1, Group 1, Chapter 4, Part 1, Title 24.~~*

~~1640A.2.2 [Not adopted by DSA-SS]~~ 3415.4 Evaluation required. *If the criteria in Section ~~1640A.2~~ 3415.3 apply to the project under consideration, the design professional of record shall provide an evaluation in accordance with Section ~~1643A~~ 3415 to determine the seismic performance of the building in its current configuration and condition. If the structure's seismic performance as required by Section 3415.5 is evaluated as satisfactory and the peer reviewer(s), when Method B of Section ~~1648A~~ 3419 is used, concur, then no structural retrofit is required.*

~~EXCEPTION:~~ *~~In some cases a technical review and evaluation may be waived under the exception of Section 1648A.1, where the life-safety threat posed by the building is clearly minimal.~~*

~~1640A.1.1~~ 3415.5 Minimum seismic design performance levels for structural and nonstructural components.

~~The purpose of this division is to provide a minimum level of seismic performance. At this essential life-safety level (seismic performance category SPC-2), in general, persons in and around the building will be able to safely exit or be evacuated from the building or its vicinity following an earthquake. It does not mean that persons will not be injured or not be in need of medical attention. This level of seismic performance is presumed to be achieved when a) the building has some margin against either total or partial collapse of the structural system even though significant damage may have occurred that may not be economical to repair; b) major structural elements have not fallen or been dislodged so as to pose a life-safety threat; and c) nonstructural systems or elements that are heavy enough to cause severe injuries either within or outside the building have not been dislodged so as to pose a life-safety threat.[For OSHPD 1& 4] For buildings in seismic performance categories SPC-3 through 5, the purpose of the division is to provide the immediateoccupancy level of seismic performance. At this level, the building and essential nonstructural systems will be reasonably capable of functioning following an earthquake.~~

~~**1640A.1.1 [For DSA/SS]** *For rehabilitation of existing buildings for use as school buildings, the performance objective of this division is to provide for Protection of Life and Property as defined in Section 1641A.*~~

Following the notations of ASCE 41, the seismic requirements for design and assessment are based upon a prescribed Earthquake Hazard Level (BSE-1, BSE-2, BSE-R, or BSE-C), a specified structural performance level (S-1 through S-5) and a non-structural performance level (N-A through N-E). The minimum seismic performance criteria are given in Table 3415.5 according to the Building Regulatory Authority and the Occupancy Category as determined in Chapter 16 or by the regulatory authority. The building shall be evaluated at both the Level 1 and Level 2 performance levels, and the more restrictive requirements shall apply.

> ***Exception:*** *If the floor area of an addition is greater than the larger of 50% of the floor area of the original building or 1,000 sf, then the Table 3415.5 entries for BSE-R and BSE-C are replaced by BSE-1 and BSE-2 respectively.*

Table 3415.5 *Seismic performance requirements by Building Regulatory Authority and Occupancy Category. All buildings not regulated by DSA are assigned as "State-Owned."*

Building Regulatory Authority	Occupancy Category	Performance Criteria	
		Level 1	Level 2
Division of the State Architect - Public schools	I, II, III, IV	BSE-1, S-2, N-C	BSE-2, S-4, N-D

Footnotes:

1. *ASCE 41 provides acceptance criteria (e.g. m, rotation) for Immediate Occupancy (S1), Life Safety (S3), and Collapse Prevention (S5), and specifies that values for S-2 and S-4 are to be determined by interpolation between the adjacent performance level values.*

   The required method of interpolation is as follows:

   For level S-2, the acceptance value is 1/3 of the sum of the tabulated value for Immediate Occupancy (IO level) and twice the tabulated value for the Life Safety (LS level).

   For level S-4, the acceptance value is one-half the sum of the value for the LS level and the value for the Collapse Prevention (CP) level.

   For Non-structural components, N-A corresponds to the IO level, N-C to the LS level, and N-D to the Hazards Reduced (HR level).

   For Evaluation Procedures, N-B shall be the same as for N-A. Where numerical values are used, the values for N-B are one half the sum of the appropriate IO and LS values. Where IO or CP values are not given by ASCE 41, then the LS values may be substituted.

2. *Buildings evaluated and retrofitted to meet the requirements for a new building, Chapter 16, Part 2, Title 24, in accordance with the exception in Section 3417.1, are deemed to meet the seismic performance requirements of this section.*

~~**1640A.2.3**~~ **3415.6 Retrofit Required.** *Where the evaluation indicates the building does not meet the ~~essential life-safety objective of this division~~ required performance objectives of this section, the owner shall take appropriate steps to ensure that the building's structural system is retrofitted in accordance with the provisions of ~~this division~~ Section 3415. Appropriate steps are either 1) undertake the seismic retrofit as part of the additions, modifications, and/or repairs of the structure; or 2) provide a plan, acceptable to the ~~enforcement agent~~ Building Official, to complete the seismic retrofit in a timely manner. The relocation or moving of an existing building is considered to be an alteration requiring filing of the plans and specifications approved by the Building Official.*

~~**1640A.2.4 [For DSA/SS] Required evaluation and retrofit.** *Where evaluation per Section 1643A indicates the building or an element of the building does not meet the performance objective of this division, the retrofit shall be designed to meet the provisions of the same methodology used in the evaluation per*~~

~~Sections 1640A.3, 1640A.6 or 1640A.7. Retrofit to existing construction shall comply with the detailing requirements for new construction of Part 2, Title 24, currently effective edition.~~

~~**1640A.3 [Not adopted by DSA-SS]**~~ **3415.7** *The additions, modification, or repair to any existing building may be prepared in accordance with the requirements for a new building, ~~Chapter 16A, Division VI~~ Chapter 16, Part 2, Title 24, C.C.R., 2007 edition, applied to the entire building.*

~~**1640A.3.1 [For DSA/SS]** The rehabilitation of any existing building may be evaluated and designed in accordance with the requirements for a new public school building in accordance with Part 2, Title 24, currently effective edition. Evaluation and design, material testing, condition assessment and determination of equivalency with code standards for non-conforming construction shall be approved in accordance with the procedures defined in Section 1640.A.8. Equivalency with code standards for non-conforming construction shall be determined by rational analysis or testing.~~

~~**1640A.4**~~ **3415.8** *The requirements of ~~UBC Appendix Chapter 16, Sections 1654-1665,~~ ASCE 41 Chapter 9 are to apply to the use of seismic isolation or passive energy systems for the repair, modification or retrofit of an existing structure. When seismic isolation or passive energy dissipation is used, the project must have project peer review as prescribed in Section ~~1649A~~ 3420.*

> ~~**EXCEPTION:** [For DSA/SS] For public school buildings, the requirements of Appendix Chapter 16A, Section 1654A through 1665A apply in lieu of those of the UBC for repair, modification or retrofit to existing hospital buildings.~~

~~**1640A.5 [Not adopted by DSA-SS]**~~ **3415.9** *Any construction required by this ~~division~~ Chapter shall include structural observation by the ~~licensed structural engineer, civil engineer or architect of record~~ registered design professional who is responsible for the structural design in accordance with Section ~~1643A.12~~ 3417.10.*

~~**1640A.5.1 [For DSA/SS]** Construction testing, inspection and observation requirements shall be as set forth in Section 4-333(a), Article 5, Group 1, Chapter 4, Part 1, Title 24, Building Standards Administrative Code, Chapter 17A, and the testing and inspection requirements of Chapters 18A through 23A, Part 2, Title 24.~~

~~**1640A.6**~~ **3415.10** *Where Method B of Section ~~1648A~~ 3419 is used or is required by Section ~~1643A.7~~ 3415.8, the proposed method of building evaluation and design procedures must be accepted by the ~~enforcement agent~~ Building Official prior to the commencement of the work.*

~~**[For DSA/SS]** The rehabilitation of any existing building may be evaluated and designed in accordance with the requirements for Method B of this division provided the methodologies for evaluation and design, and for determination of acceptance criteria for existing construction are approved in accordance with the procedures defined in Section 1640.A.8. Procedures for material testing and condition assessment shall also be approved in accordance with Section 1640.A.8. When Method B is used, the owner shall retain an independent peer review consultant to provide expertise and recommendations appropriate to the design, analysis and performance issues associated with the project in accordance with Sections 1640A.8.3 and 1648A.2.~~

> ~~**1640A.6.1** The structural system allowances of Chapter 34 do not apply to any building to which Division VI-R applies.~~

~~**1640A.7 [For DSA/SS]** The rehabilitation of any existing building, unless otherwise limited per Section 1643A.7, may be evaluated and designed in accordance with the requirements for Method A of this division. Methodologies for evaluation and design, and determination of β-factors or alternate β-factors per Section 1645A.2.2 shall be approved in accordance with the procedures defined in Section 1640.A.8. Procedures for material testing and condition assessment shall also be approved in accordance with Section 1640.A.8.~~

~~**1640A.8 [For DSA/SS] Procedures for DSA Approval of the Evaluation and Retrofit Design.** During the schematic phase of the project, the owner or the design professional in responsible charge of design shall perform initial data collection and assessment of the building (Section 1640A.8.1) and prepare and sign an Evaluation and Design Criteria Report (Section 1640A.8.2). The report shall propose the methodologies for evaluation and design, and determination of acceptance criteria for nonconforming construction; and shall propose the material testing and condition assessment requirements for the rehabilitation. Two copies of the report shall be submitted to the DSA for review and approval prior to proceeding with design development of the rehabilitation. The DSA shall review the report to determine that each item per Section 1640A.8.2 has~~

~~*been satisfactorily addressed. If DSA determines that one or more items are not satisfactorily addressed or DSA does not concur with any of the proposals, the report shall be returned to the design professional for correction. Upon concurrence that all items have been satisfactorily addressed by the proposals in the report, DSA shall approve, sign and return a copy of the signed report to the owner.*~~

~~*The approved Evaluation and Design Criteria Report establishes: 1) the criteria for the evaluation and design to be used by the project design professionals, and 2) the material testing and condition assessment requirements.*~~

~~*If changes to the approved criteria are determined to be necessary during design development and completion of construction documents, the project design professional shall submit an amendment to the Evaluation and Design Criteria Report to the DSA for approval. When Method B is used, the peer reviewer shall review the amendment and provide a written report to the owner and DSA in accordance with Section 1649A.*~~

~~*Upon completion of the design, the plans and specifications shall be submitted to the DSA for approval per the provisions of Part 1,Title 24.*~~

~~***1640A.8.1. Initial data collection and assessment.*** *Initial data collection and assessment shall include:*~~

~~*1. Site visit(s) of structure.*~~
~~*2. Data collection of existing site conditions and building construction in accordance with Section 1643A.2.*~~

~~*3. Review of original plans, specifications and associated construction documents, including material test reports, geohazard and geotechnical reports. Where original building plans and specifications are not available, "as-built" plans shall be prepared that accurately depict the existing vertical and lateral structural systems, exterior elements (cladding) and non-structural systems. Where geohazard and geotechnical reports are not available, these reports may be required by the DSA for existing sites in accordance with Section 4-317(e), Article 1, Group 1, Part 1, Title 24.*~~

~~*4. Preliminary analysis of the lateral force resisting system that provides the basis for the proposed evaluation and design method.*~~

~~***1640A.8.2. Evaluation and Design Criteria Report.*** *The Evaluation and Design Criteria Report shall be signed by the design professional in responsible charge of the design and the project structural engineer and shall:*~~

~~*1. Describe the building(s) configuration and type of construction.*~~

~~*2. Identify the building gravity and lateral load resisting systems, and non-structural systems that may affect the stiffness or strength of the lateral system during a seismic event.*~~

~~*3. Describe the project site and identify any potential hazards from adjacent or adjoining structures or site conditions.*~~

~~*4. Identify potential geological hazards.*~~

~~*5. Describe the physical condition and known material properties of existing gravity and lateral load resisting elements or components and of exterior elements of the structure based on the data collection processes of 1650A.*~~

~~*6. Based on data collection and review of original construction documents and preliminary analysis, identify potential deficiencies in the gravity and lateral load resisting systems.*~~

~~*7. Propose the methodology for evaluation and design of the structure. Include methodology to establish modeling parameters to be used in the analysis and to establish Beta-factors or acceptance criteria for non-code-compliant construction.*~~

~~*8. Provide the justification for the proposed methodology. Include any preliminary calculations.*~~

~~*9. Propose the program for additional data collection, condition assessment and testing requirements to complete the analysis. Identify locations for the proposed material assessment and tests.*~~

~~*Submit with the Evaluation and Design Criteria Report:*~~

~~*1. Approved or "as-built" building plans, specifications and associated construction documents that accurately depict the existing construction.*~~

~~*2. Available material test reports, geohazard and geotechnical reports from the existing construction.*~~

~~***1640A.8.3. Requirements for Method B.***~~

~~*1. Upon selection of Method B, the design professional(s) in responsible charge of the design and the independent peer reviewer(s) shall meet with the DSA prior to development of the Evaluation and Design Criteria Report, to: define the scope of the structural rehabilitation, determine appropriate evaluation and design methodologies, determine initial data collection requirements, and determine the scope of the peer review process for the project.*~~

~~*2. During the schematic phase, upon review of the Evaluation and Design Criteria Report, the peer reviewer shall provide a written report to the owner and DSA in accordance with Section 1649A.*~~

~~*3. During the design development phase of the project, upon completion of the analysis, the peer reviewer shall review the analysis results and provide a written progress report in accordance with Section 1649A. The design professional(s) shall provide responses and corrective actions in accordance with Section 1649A.6.*~~

> ~~***EXCEPTION**: When the DSA determines that the project scope does not require a report during the design development phase, this requirement may be waived by the DSA.*~~

~~*4. Upon completion of the construction documents prior to submittal of the application to the DSA, the peer reviewer shall review the plans, specifications and any final analysis results and provide a written report to the owner and DSA in accordance with Section 1649A. The design professional(s) shall provide responses and corrective actions in accordance with Section 1649A.6.*~~

~~*5. During construction of the rehabilitation and when determined necessary by the design professional or the DSA, the peer reviewer shall review proposed changes to the approved plans and specifications and provide a written report to the owner and DSA in accordance with Section 1649A.*~~

~~***1640A.9 [For DSA/SS]** Where only a portion(s) of a structure is to be rehabilitated, the school portion of the structure shall:*~~

~~*1. Be seismically separated from the unrehabilitated portion in accordance with Section 1646A.2.11.1, or the entire structure shall be rehabilitated in accordance with this division. For structures in which the unrehabilitated portion is above or below the school portion, the entire structure shall be rehabilitated in accordance with this division.*~~

~~*2. Be retrofitted as necessary to protect the occupants from falling hazards of the unrehabilitated portion of the building, and;*~~

~~*3. Be retrofitted as necessary to protect required exitways being blocked by collapse or falling hazards of the unrehabilitated portion.*~~

3415.11 Voluntary lateral-force resisting system modifications. *Where the exception of Section 3415.2 applies, modifications of existing structural components and additions of new structural components that are initiated for the purpose of improving the seismic performance of an existing structure and that are not required by other portions of this Chapter are permitted under the requirements of Section 3417.12.*

Notation (DSA-SS):
Authority: Education Code Sections 17280.5, 17310
Reference: Education Code Sections 17280 - 17317

SECTION 3416 – DEFINITIONS

~~1641A.1~~ 3416.1 *For the purposes of this ~~division~~ Chapter, certain terms are defined ~~in addition those in Section 1627A,~~ as follows:*

~~***ACTIVE EARTHQUAKE FAULT*** *is one that has exhibited surface displacement within Holocene time (about 11,000 years) as determined by the California Division of Mines and Geology under the Alquist-Priolo Special Studies Zones Act or other authoritative source, Federal, State or Local Governmental Agency.*~~

ADDITION *means any work that increases the floor or roof area or the volume of enclosed space of an existing building, and is structurally attached to the existing building by connections that are required for transmitting vertical or horizontal loads between the addition and the existing structure.*

ALTERATION *means any change within or to an existing building, which does not increase and may decrease the floor or roof area or the volume of enclosed space.*

~~***[For DSA/SS] CODE-COMPLYING ELEMENT*** *is an element that complies with the Seismic Zones 3 and 4 detailing requirements for "ductile" elements that are part of the lateral-force-resisting system for a β equal to 1.0 as defined in Section 1645A for specific elements and materials.*~~

~~***[For DSA/SS] CODE-COMPLYING SYSTEM*** *is a system that complies with the Seismic Zones 3 and 4 requirements for lateral-force-resisting systems and materials consisting of code-complying elements.*~~

DANGEROUS CONDITION *Any building or structure or any individual component with any of the structural conditions or defects described below shall be deemed dangerous:*

1. *The load action in a component due to all factored dead and live loads is more than one and one-third the nominal strength permitted by this code. Where vertical load bearing walls, columns, or other vertical load bearing elements or components list, lean, or are otherwise laterally deformed, the resulting vertical load times lateral deformation (PΔ) effect shall be considered in the evaluation of the load action.*
2. *Any portion, structural or non-structural component of the building or structure, or any appurtenance within the structure damaged to the extent that it could potentially fail, detach, or dislodge, or collapse under normal operational conditions or loading and thereby cause a health and safety hazard.*
3. *Any portion of a building, structural or non-structural component, appurtenance, or ornamentation on the exterior thereof with insufficient strength or stability, or attachment to resist lateral loading equal to two-thirds of that specified in Section 3417.*
4. *The building, or any portion thereof, is likely to collapse partially or completely due to damages caused by fire, earthquake, wind, or flood; or any other similar cause.*

DESIGN *is the procedure that includes both the evaluation and retrofit design of an existing component, element, or structural system, and design of a new component, element, or structural system.*

~~***DESIGN BASIS EARTHQUAKE*** *is the earthquake ground motion having a 5 percent damped acceleration response spectrum as represented by R/1 times the Base Shear V given by Formulas (44A-1) and (44A-2).*~~

~~***DISTANCE FROM AN ACTIVE EARTHQUAKE FAULT*** *is measured from the nearest point of the building to the closest edge of an Alquist-Priolo Earthquake Fault Zone for an active fault, if such a map exists, or to the closest mapped splay of the fault.*~~

~~***DUCTILE ELEMENT*** *is an element capable of sustaining large cyclic deformations beyond the attainment of its nominal strength without any significant loss in capacity. Refer to Section 1645A for specific elements and materials.*~~

~~***ELEMENT*** *is a part of an architectural, electrical, mechanical or structural system.*~~

~~***ENFORCEMENT AGENT*** *is that individual within the agency or organization charged with responsibility for agency or organization compliance with the requirements of Division VI-R.*~~

ENFORCEMENT AGENCY *(CODE OFFICIAL in ASCE 41) is the agency or organization charged with responsibility for agency or organization compliance with the requirements of this Code.*

~~***[For DSA/SS] ESSENTIALLY COMPLYING STRUCTURAL SYSTEM or ELEMENT*** *is a lateral-force-resisting system or element that may deviate from but can provide comparable elastic and inelastic cyclic load-deformation behavior as a code-complying system or code-complying element.~~

~~***ESSENTIAL LIFE SAFETY*** *is the retrofit or repair of a structure to a goal of essential life-safety as a level of expected structural performance taken to mean that occupants will be able to exit the structure safely following an earthquake. It does not mean that they will be uninjured or not be in need of medical attention. A structure is presumed to achieve this level of performance where, although significant damage to the structure may have occurred, some margin against either total or partial structural collapse remains, even though damage may not be economical to repair; major structural elements have not become dislodged or fallen so as to pose a life-safety threat; and, nonstructural systems or elements, which are heavy enough to cause severe injuries either within or outside the building, have not become dislodged so as to pose a life-safety threat.~~

~~***IMMEDIATE OCCUPANCY.*** *The retrofit or repair of a structure to a goal of immediate occupancy as a level of expected performance is taken to mean the post-earthquake damage state in which only limited structural and nonstructural damage has occurred. The original strength and stiffness of the structure is substantially retained, with minor cracking and yielding of structural elements. Basic access and life-safety systems, including doors, stairways, elevators, emergency lighting, fire alarms and suppression systems, remain operable, provided that utilities are available. It is expected that occupants could safely remain in the building, although normal use may be impaired and some clean-up, inspection and limited structural and nonstructural repairs may be required.~~

~~***INELASTIC DEMAND RATIO (IDR)*** *is the ratio of the total load demand on an element to the nominal strength capacity of an element, where load demand is the combination of gravity loads and the unreduced (by R) elastic response force due to the specified earthquake ground motion.~~

~~***LATERAL LOAD CAPACITY*** *is the capacity as determined either by Method A or Method B of the subject element. The capacity of a system is the sum of all element capacities acting individually reduced by the β-factor for the element and meeting the requirements of Section 1646A.2.4. All forms of loading are to consider both displacements in orthogonal directions and torsion.~~

~~***[For DSA/SS] LIMITED-DUCTILE ELEMENT*** *is an element that is capable of sustaining moderate cyclic deformations beyond the attainment of nominal strength without significant loss in strength. The deformation capability is less than that of a "ductile" element, and these elements do not meet the "ductile" element criteria for a β-factor equal to 1.0 per Section 1645A for specific elements and materials.~~

MODIFICATIONS: *For this section, modification is taken to include repairs to structures that have been damaged.*

METHOD A *refers to the procedures ~~contained in Sections 1645A-1647A~~ prescribed in Section 3418.*

METHOD B *refers to the procedures ~~contained in Section 1648A~~ allowed in Section 3419.*

~~***NOMINAL STRENGTH*** *is the peak capacity of an element using specified material and assembly properties of the applicable materials chapters of Title 24. Examples are the flexural strength of a reinforced concrete beam M_n when the maximum concrete strain is at 0.003, or the plastic flexural capacity of a steel beam $Mp = ZF_y$ when all fibers in the section are at yield stress F_y and Z is the plastic section modulus. It is also the accepted peak strength from test results.~~

~~***NONDUCTILE ELEMENT*** *is an element having a mode of failure that results in an abrupt loss of resistance when the element is deformed beyond the deformation corresponding to the development of its nominal strength. Nonductile elements cannot reliably sustain any significant deformation beyond that attained at their nominal strength.~~

N-A, N-B, N-C, N-D, N-E *are seismic non-structural component performance measures as defined in ASCE 41. N-A corresponds to the highest performance level, and N-D the lowest, while N-E is not considered.*

PEER REVIEW *refers to the procedures contained in Section ~~1649A~~ 3420.*

~~***PROBABLE STRENGTH*** *is the level of strength of an element likely in as-built or existing materials. For example, in reinforced concrete, it is common that actual steel yield is larger than the specified design value, and therefore probable strength is taken as equal to 1.25 times the nominal strength in flexure.*~~

~~***[For DSA/SS] PROTECTION OF LIFE AND PROPERTY*** *is the rehabilitation of a structure to a goal of protection of life and property as a level of expected structural and nonstructural performance taken to mean: a) the building has substantial margin against either total or partial collapse of the gravity and lateral structural systems allowing occupants to exit safely; b) structural and nonstructural elements either within or outside the building have not fallen or been dislodged so as to pose a life-safety threat. It is expected that the structure may experience some repairable damage.*~~

~~***[For DSA/SS] REHABILITATION*** *is the evaluation and retrofit of an existing nonconforming building or a school building conforming to earlier code requirements to bring the building, or portion thereof, into conformance with the safety standards of the currently effective regulations, Parts 2, 3, 4, 5, 6, 7, 8, 9 and 12, Title 24, C. C. R.*~~

REPAIR *as used in this ~~division~~ Chapter means ~~all~~ the design and construction work undertaken to restore or enhance the structural and nonstructural load-resisting system participating in the lateral response and stability of a structure that has experienced damage from earthquakes or other destructive events.*

~~***[For DSA/SS] RETROFIT*** *as used in this division means all design and construction work undertaken to construct any new or to repair or strengthen any existing structural or nonstructural elements required by the evaluation and design of the building.*~~

S-1, S-2, S-3, S-4, S-5, S-6 *are seismic structural performance measures as defined in ASCE 41. S-1 corresponds to the highest performance level, and S-5 the lowest, while S-6 is not considered.*

SPECIFIC PROCEDURES *are the procedures listed in Section 3417.1.1.*

STRUCTURAL REPAIRS *are any changes affecting existing or requiring new structural components primarily intended to correct the effects of damage, deterioration or impending or actual failure, regardless of cause.*

~~***USABLE STRENGTH or FACTORED STRENGTH*** *is the product of strength reduction factor Φ times the nominal strength in the appropriate material.*~~

Notation (DSA-SS):
Authority: Education Code Sections 17280.5, 17310
Reference: Education Code Sections 17280 - 17317

SECTION 3417 – SEISMIC CRITERIA SELECTION FOR EXISTING BUILDINGS

~~***1643A.1 [Not adopted by DSA-SS]***~~ ***3417.1*** **Basis for Evaluation and Design.** *This section determines what technical approach is to be used for the seismic evaluation and design for existing buildings. For those buildings or portions of buildings for which Section ~~1640A.2~~ 3415 requires action, the procedures and limitations for the evaluation of existing buildings and design of retrofit systems and/or repair thereof shall be implemented in accordance with this section.*

One of the following approaches must be used:

1. *Method A ~~(Sections 1644A-1647A), is prescriptive and comparable to the Division VI provisions for new structures~~ of Section 3418;*
2. *Method B ~~(Section 1648A), for complex or potentially hazardous situations is performance based and depends on the independent review of a peer reviewer (Section 1649A)~~ of Section 3419, with independent review of a peer reviewer as required in Section 3420;*
3. *(reserved for state-owned buildings)*

When the Method B is chosen it must be approved by the Building Official, and, where applicable, by the Peer Reviewer. All reference standards in ASCE 41 shall be replaced by reference standards listed in Chapter 35 of this code.

Exception: *For buildings constructed to the requirements of California Building Code, 1998 or later edition as adopted by the governing jurisdiction, that code is permitted to be used in place of those specified in Section 3417.1.*

~~[For DSA/SS] Basis for Evaluation and Design.~~ *~~This section determines which technical approach may be used for the seismic evaluation and design for existing buildings. For those buildings or portions of buildings for which Section 1640A.2 requires retrofit, the procedures and limitations for the evaluation of existing buildings and design of retrofit systems and/or repair thereof shall be implemented in accordance with this section. One of three alternative approaches must be used: the first, Method A (Sections 1644A-1647A), as defined in Section 1640A.7, is prescriptiveand comparable to the Part 2, Title 24, provisions for new buildings; the second, Method B (Section 1648A), as defined in Section 1640A.6, for complex or potentially hazardous situations is performance based and depends on the independent review of a peer reviewer (Section 1649A); the third is the use of Part 2, Title 24, as defined in Section 1640A.3.~~*

~~1643A.1.1 [Not adopted by DSA-SS]~~ 3417.1.1 ~~Special~~ Specific procedures.

~~Where there are special prescriptive procedures for the repair and/or retrofit of existing buildings as a part of these regulations, the UCBC, or accepted practice by the enforcement agent, these procedures may be used in lieu of the requirements of Chapter 34. The following special prescriptive procedures may be used for their respective types of construction to meet the requirements of this division.~~

~~1. The UCBC for Seismic Strengthening Provisions for Unreinforced Masonry Bearing Wall Buildings (Appendix Chapter 1).~~

~~2. The UCBC for Cripple Walls and Anchor Bolts (Appendix Chapter 6).~~

~~3. The UCBC for Flexible Diaphragm Rigid Wall Buildings (Appendix Chapter 5).~~

~~4. The SAC Interim Guidelines for the Evaluation, Repair, Modification, and Design of Welded Steel Moment Frame Structures, FEMA 267, August 1995. The ground motion specifications of this division shall be used when the SAC procedures are applied.~~

~~1643A.1.1.1~~ *~~The UCBC for Seismic Strengthening Provisions for Unreinforced Masonry Bearing Wall Buildings (Appendix Chapter 1).~~*

~~1643A.1.1.2~~ *~~The UCBC for Cripple Walls and Anchor Bolts (Appendix Chapter 6).~~*

~~1643A.1.1.3~~ *~~The UCBC for Flexible Diaphragm Rigid Wall Buildings.~~*

~~1643A.1.1.4~~ *~~The SAC Interim Guidelines for the Evaluation, Repair, Modification, and Design of Welded Steel Moment Frame Structures, FEMA 267, August 1995. The ground motion specifications of this division shall be used when the SAC procedures are applied.~~*

(3417.1.1 reserved for state-owned buildings)

3417.1.2 *When a design project is begun under Method B the selection of the peer reviewer is subject to the approval of the Building Official. Following approval by the peer reviewer, the seismic criteria for the project and the planned evaluation provisions must be approved by the Building Official. The approved seismic criteria and evaluation provisions shall apply. Upon approval of the Building Official these are permitted to be modified.*

*(**3417.1.3** reserved for state-owned buildings)*

~~1643A.14~~ 3417.1.4 *For public schools, unreinforced masonry shall not be used to resist in-plane or out-of-plane seismic forces or superimposed gravity loads.*

~~1643A.15~~ 3417.1.5 *For public schools, horizontal diaphragms and vertical shear walls shall consist of either diagonal lumber sheathing or structural panel sheathing. Braced horizontal diaphragms may be acceptable when approved by DSA. Straight lumber sheathing may be used in combination with diagonal or structural panel sheathing as diaphragms or shear walls. Let-in bracing, plaster (stucco), gypsum wallboard and particleboard sheathing shall not be allowed to resist seismic forces.*

~~1643A.2~~ ***3417.2*** ***Existing Conditions****. The existing condition and properties of the entire structure must be determined and documented by thorough inspection of the structure and site, review of all available related construction documents, review of geotechnical and engineering geologic reports, and performance of necessary testing and investigations ~~in accordance with data collection provisions of Section 1650A~~. Where samples from the existing structure are taken or in situ tests are performed, they shall be selected and interpreted in a statistically appropriate manner to ensure that the properties determined and used in the evaluation or design are representative of the conditions and structural circumstances likely to be encountered in the structure as a whole. Adjacent structures or site features that may affect the retrofit design shall be identified.*

The entire load path of the seismic force resisting system shall be determined, documented and evaluated. The load path includes all the horizontal and vertical elements participating in the structural response: such as diaphragms, diaphragm chords, diaphragm ~~drags~~ collectors; vertical ~~lateral force resisting system (walls, frames, braces, etc.)~~ elements such as walls, frames, braces; foundations and the connections between the components and elements of the load path. Repaired or retrofitted elements and the standards under which the work was constructed shall be identified.

These requirements shall be met following the data collection requirements of ASCE 41 Section 2.2 and shall be implemented as follows:

1. (reserved for state-owned buildings)

2. For public schools, the "Comprehensive" level as defined in ASCE 41, Section 2.2.6.3.

Qualified test data from the original construction may be accepted, in part or in whole, by the Enforcement Agency to fulfill the data collection requirements.

Exceptions:

1. The number of samples for data collection may be adjusted with approval of the Enforcement Agency when it has been determined that adequate information has been obtained or additional information is required.

2. Welded steel moment frame connections of buildings that may have experienced potentially damaging ground motions shall be inspected in accordance with Chapters 3 and 4, FEMA 352, Recommended Post Earthquake Evaluation and Repair Criteria for Welded Moment-Frame Construction for Seismic Applications (July 2000).

Where original building plans and specifications are not available, "as-built" plans shall be prepared that depict the existing vertical and lateral structural systems, exterior elements, foundations, and non-structural systems in sufficient detail to complete the design.

Data collection shall be directed and observed by the project structural engineer or design professional in charge of the design.

~~1643A.3~~ ***3417.3*** ***Site Geology and Soil Characteristics.*** *Soil profile shall be assigned in accordance with the requirements of ~~Section 1629A.3~~ Chapter 18 ~~where Method A or Part 2, Title 24 are used~~.*

~~1643A.4~~ ***3417.4*** ***Occupancy Categories.*** *For purposes of earthquake-resistant design, each structure shall be placed in one of the occupancy categories in accordance with the requirements of ~~Section 1629A.2~~ this code.*

~~1643A.5~~ ***3417.5*** ***Configuration Requirements.*** *Each structure shall be designated structurally regular or irregular in accordance with the requirements of ~~Section 1629A.5~~ ASCE 41 Sections 2.4.1.1.1 to 2.4.1.1.4.*

~~1643A.6~~ ***3417.6*** ***General Selection of the Design Method****. The requirements of Method B (Section ~~1648A~~ 3419) ~~and Part 2, Title 24~~ may be used for any existing building.*

~~1643A.7~~ ***3417.7*** ***Prescriptive Selection of the Design Method*** *The requirements of Method A ~~(Sections 1644A-1647A)~~ (Section 3418) or the Specific Procedures for applicable building types given in Section 3417.1.1 may be used except under the following conditions, where the requirements of Method B (Section 3419) must be used.*

~~***[For DSA/SS]*** *The requirements of Method A (Sections 1644A-1647A) may be used except under the following conditions, where Method B or Part 2, Title 24, shall be used.*~~

~~***1643A.7.1***~~ ***3417.7.1*** *When the building contains prestressed or post tensioned structural components (beams, columns, walls or slabs) or contains precast structural components (beams, columns, walls or flooring systems).*

~~***1643A.7.2***~~ ***3417.7.2*** *When the building is classified as irregular in vertical or horizontal plan by application of ~~Table 16A-L or 16A-M~~ ASCE/SEI 7-05 Section 12.3 and/or ASCE 41 Section 2.4.1.1.1 to 2.4.1.1.4, unless the irregularity is demonstrated not to affect the seismic performance of the building.*

Exception: *If the retrofit design removes the configurational attributes that caused the building to be classified as irregular, then Section 3417.7.2 does not apply and Method A may be used.*

~~***1643A.7.3 [Not adopted by DSA-SS]***~~ ***3417.7.3*** *For any building that ~~has an improtance factor I greater than 1.00 (Table 16A-K)~~ is assigned to Occupancy Category IV.*

~~***1643A.7.4***~~ ***3417.7.4*** *For any building using undefined or hybrid structural systems. ~~Method B shall be used for these structural systems.~~*

~~***1643A.7.5***~~ ***3416.7.5*** *When ~~passive or active energy absorption~~ seismic isolation or energy dissipation systems are used in the retrofit or repair, either as part of the existing structure or as part of the modifications. ~~Method B shall be used for these structural systems.~~*

~~***1643A.7.6 [Not adopted by DSA-SS]***~~ ***3417.7.6*** *When the height of the structure exceeds 240 feet (73 152 mm).*

~~***1643A.7.6.1 [For DSA/SS]*** *When the building exceeds three stories.*~~

~~*EXCEPTION: 1. Any school building for which the structural system is retrofitted using Method B, Method A may be used for retrofit or repair of nonstructural components and systems.*~~

~~***1643A.7.7 [For DSA/SS]*** *When the building contains unreinforced masonry.*~~

~~***1643A.8 Seismic Hazard Factor****. The Seismic Hazard Factor, H, shall be determined according to the following procedure.*~~

~~***1643A.8.3 [For DSA/SS]*** *The Seismic Hazard Factor, H, is equal to 1.2.*~~

~~***1643A.9***~~ ***3417.8*** ~~***Capacity***~~ ***Strength Requirements****. All ~~elements~~ components of the lateral-force-resisting system must have the ~~capacity~~ strength to ~~resist~~ meet the ~~seismic demand~~ acceptance criteria prescribed in ASCE 41 Section Chapter 3, or as prescribed in the applicable Appendix A Chapter of the IEBC if a Specific Procedure in Section 3417.1.1 is used. Any ~~element~~ component not having this ~~capacity~~ strength shall have its capacity increased by modifying or supplementing its ~~capacity~~ strength so that it exceeds the demand, or the demand is reduced to less than the existing ~~capacity~~ strength by making other modifications to the structural system.*

~~*[For DSA/SS: Any element that has experienced damage or deterioration and no longer retains the capacity to resist the seismic demand and/or gravity load shall be retrofitted in accordance with Section 1643A.10.1].*~~

~~***EXCEPTIONS:*** *1. An elements usable strength capacity may be less than that required by the specified seismic load combinations if it can be demonstrated that the associated reduction in seismic performance of the element or its removal due to the failure does not result in a structural system in which there is a life-safety hazard due to the loss of support of gravity loads;, a laterally unstable structure;, or falling structural or nonstructural elements or parts thereof. If this exception is taken for an element, then it cannot be considered part of the primary lateral load-resisting system.*~~

~~*2. The load transferred from an adjoining element to a given element need not exceed the probable strength 1.25 C_n of the adjoining element, given that the assembly remains stable where Method A or Part 2, Title 24 are used. For elements where the resistance is expressed in terms of the allowable or working stress method, the usable strength ΦC_n may be determined using an allowable stress increase of 1.70, or may be established by acceptable published factors for a*~~

~~given material or element, or by the use of appropriate available test data and the applicable principles of mechanics.~~

Exception: *A component's strength may be less than that required by the specified seismic load combinations if it can be demonstrated that the associated reduction in seismic performance of the component or its removal due to the failure does not result in a structural system that does not comply with the required performance objectives of Section 3415. If this exception is taken for a component, then it cannot be considered part of the primary lateral-load-resisting system.*

~~***1643A.10.1 [For DSA/SS] New or Retrofitted Elements.*** *Any new or retrofitted structural or nonstructural element(s) shall comply with the detailing requirements for new construction of Part 2, Title 24, currently effective edition, and shall meet the capacity requirements of Section 1643A.9.*~~

~~***EXCEPTION:*** *1. Where approved by the DSA, other nationally recognized standards or guidelines may be used in lieu of Part 2, Title 24, provisions.*~~

~~*2. Where approved by the DSA, the use of nonductile or limited ductile elements may be allowed if the particular material provides the only means of ensuring compatible performance without detrimental interaction effects on the existing element material.*~~

~~***1643A.11 Deformation Compatibility.*** *The compatibility of the deformation characteristics of all elements activated in the response shall be considered, as well as the configuration of the structural and nonstructural systems; the continuity, or lack thereof, of load paths; the redundancy, if any, of these load paths; and the physical condition of the materials and elements.*~~

~~*[For DSA/SS: The gravity load resisting members and exterior elements shall be evaluated and retrofitted to resist gravity loads combined with seismic induced drift associated with the design ground motion.]*~~

3417.9 Nonstructural Component Requirements. *Where the nonstructural performance levels required by Section 3415, Table 3415.5 are N-D or higher; mechanical, electrical, and plumbing components shall comply with the provisions of ASCE 41, Chapter 11, Section 11.2.*

Exception: *Modifications to the procedures and criteria may be made subject to approval by the building official, and concurrence of the peer reviewer if applicable. All reports and correspondence shall also be forwarded to the Building Official.*

~~***1643A.12 [Not adopted by DSA-SS]***~~ ***3417.10 Structural Observation, Testing and Inspection.***

~~***1643A.12.1***~~ *Structural, geotechnical and construction observation, testing and inspection as used in this* ~~*division*~~ *Section shall mean* ~~*visits to the project site by the responsible design professional to observe existing conditions and to review the construction work for general compliance with approved plans, specifications and applicable structural regulations*~~ *meeting the requirements of Chapter 17, with a minimum allowable level of investigation corresponding to seismic design category (SDC) D. At a minimum the project site will be visited by the responsible design professional to observe existing conditions and to review the construction work for general compliance with approved plans, specifications and applicable structural regulations. Such visits shall occur at significant construction stages and at the completion of the structural retrofit. Structural observation shall be provided* ~~*in Seismic Zones 3 and 4*~~ *for all structures* ~~*regulated by this division. High-rise construction requires an interim progress report each month in addition to observation reports for the significant construction stages.*~~ *The plan for testing and inspection shall be submitted to the Building Official for review and approval with the application for permit.*

Additional Requirements: *For public schools, construction material testing, inspection and observation during construction shall also comply with Section 4-333, Part 1, Title 24.*

3417.10.1 ~~*The owner shall directly employ the engineer or architect, or their designee, responsible for the structural design to perform structural observation. After each visit, the structural observer shall report in writing on the general conformity of the work to the approved plans and note any observed deficiencies to the owners representative, project inspector, contractor and the enforcement agency. The structural observer shall notify the enforcement agency in writing in a timely manner how the structural deficiencies are to be corrected. If satisfactory resolution of the deficiency is not obtained, the enforcement agency shall be notified for any necessary action.*~~

The registered design professional, or their designee, responsible for the structural design shall be retained to perform structural observation and independently report to the owner of observations and findings as they relate to adherence to the permitted plans and good workmanship.

3417.10.2 *At the conclusion of construction, the structural observer shall submit to the enforcement agency and the owner a final written statement that the required site visits have been made, that the work, to the best of the structural observers knowledge and belief, is or is not in general conformity to the approved plans and that the observed structural deficiencies have been resolved and/or listing those that, to the best of the structural observers knowledge and belief, have not been satisfactorily corrected.*

~~1643A.12.1.1~~ 3417.10.2.1 *The requirement for structural observation shall be noted and prominently displayed on the front sheet of the approved plans and incorporated into the general notes on the approved plans.*

~~1643A.12.1.2~~ 3417.10.2.2 ***Preconstruction meeting.*** *A preconstruction meeting is mandatory for all projects which require structural observation. The meeting shall include, but is not limited to, ~~the design engineer or architect~~ registered design professional, structural observer, general constructor, affected subcontractors, the project inspector and a representative of the enforcement agency (designated alternates may attend if approved by the structural observer). The structural observer ~~will~~ shall schedule and coordinate this meeting. The purpose of the meeting is to identify and clarify all essential structural components and connections that affect the lateral and vertical load systems and to review scheduling of the required observations for the project's structural system retrofit.*

~~1643A.13~~ 3417.11 ***Temporary Actions.*** *When compatible with the building use, and the time phasing for both use and the retrofit program, temporary shoring or other structural support may be considered. Temporary bracing, shoring and prevention of falling hazards ~~can offer an affordable means of qualifying for the exception in Section 1644A.4.1.1~~ may be used to qualify for Exception 1 in Section 3417.9 that allows inadequate capability in some existing ~~elements~~ components, as long as ~~life safety~~ the required performance levels given in Section 3415 can be provided by the permanent structure. The consideration for such temporary actions shall be noted in the design documents.*

~~1643A.14 [For DSA/SS] Unreinforced Masonry.~~ *~~Unreinforced masonry shall not be used to resist in-plane or out-of-plane seismic forces or superimposed gravity loads.~~*

~~EXCEPTION: Masonry may be used to resist gravity loads when justified by rational analysis and approved by the DSA.~~

~~1643A.15 [For DSA/SS] Wood Frame Buildings.~~ *~~Horizontal diaphragms and vertical shear walls shall consist of either diagonal lumber sheathing or structural panel sheathing. Braced horizontal diaphragms may be acceptable when approved by DSA. Straight lumber sheathing may be used in combination with diagonal or structural panel sheathing as diaphragms or shear walls. Let-in bracing, plaster (stucco), gypsum wallboard and particleboard sheathing shall not be allowed to resist seismic forces.~~*

3417.12 Voluntary modifications to the lateral-force resisting system. *Where modifications of existing structural components and additions of new structural components are initiated for the purpose of improving the lateral-force resisting strength or stiffness of an existing structure and they are not required by other sections of this code, they may be designed to meet an approved seismic performance criteria, provided that an engineering analysis is submitted that shows:*

1. *The capacity of existing structural components required to resist forces is not reduced, unless it can be demonstrated that reduced capacity meets the requirements of Section 3417.8;*
2. *The lateral loading to or strength requirement of existing structural components is not increased beyond their capacity;*
3. *New structural components are detailed and connected to the existing structural components as required by this code for new construction.*
4. *New or relocated nonstructural components are detailed and connected to existing or new structural components as required by this code for new construction.*

5. A dangerous condition as defined in Section 3416 does not exist.

3417.12.1 *(reserved for state-owned buildings)*

3417.12.2 Public Schools. *When Section 3417.12 is the basis for structural modifications, the approved design documents must clearly indicate the scope of modifications and the acceptance criteria for the design.*

Notation (For DSA-SS):
Authority: Education Code Sections 17280.5, 17310
Reference: Education Code Sections 17280 - 17317

SECTION 3418 - METHOD A

3418.1 General. *The retrofit design shall employ the Linear Static or Linear Dynamic Procedures of ASCE 41 Section 3.3.1 or 3.3.2 and comply with the applicable general requirements of ASCE 41 Chapters 2 and 3. The earthquake hazard level and performance level given specified in Section 3415.5 for the building occupancy type shall be used. Structures shall be designed for seismic forces coming from any horizontal direction.*

Exception*: The ASCE 41 Simplified Rehabilitation Method of Chapter 10 may be used if the Level 1 seismic performance level is S-3 or lower, the building's structural system is one of the primary building types described in ASCE 41 Table 10-2, and ASCE 41 Table 10-1 permits it use for the building height.*

SECTION 3419 - METHOD B

~~1648A.1 [Not adopted by DSA-SS]~~ 3419.1 *The existing or retrofitted structure shall be demonstrated to have the capability to sustain the deformation response due to the specified earthquake ground motions and meet the seismic performance requirements of Section 3415. The ~~engineer~~ registered design professional shall provide an evaluation of the response of the existing structure in its ~~current~~ modified configuration and condition to the ground motions specified. If the building's seismic performance is evaluated as satisfactory and the peer reviewer(s,) and the Enforcement Agency concurs, then no further ~~engineering work is required~~ structural modifications of the lateral load resisting system are required.*

When the evaluation indicates the building does not meet the ~~objective of the safety goals of this division~~ required performance levels given in Table 3415.5 for the occupancy type, then a retrofit and/or repair design shall be prepared that ~~yields~~ provides a structure that meets ~~the life-safety performance objectives of Section 1640A of this division~~ these performance objectives and reflects the appropriate consideration of existing conditions. Any approach to analysis and design may be used ~~that yields a building of reliable stability in the prescribed design earthquake loads and conditions~~ provided that the approach shall be rational, shall be consistent with the established principals of mechanics, and shall use the known performance characteristics of materials and assemblages under reversing loads typical of severe earthquake ground motions.

Exception: *Further consideration of the structure's seismic performance may be waived by the enforcement agency if both the ~~engineer-of-record~~ registered design professional and peer reviewer(s) conclude that the structural system can be expected to perform at least as well as required by the provisions of this ~~division~~ Section without completing an analysis of the structure's ~~conformance to~~ compliance with these requirements. A detailed report shall be submitted to the responsible ~~enforcement agent~~ Building Official that presents the reasons and basis for this conclusion. This report shall be prepared by the ~~engineer of record~~ registered design professional. The peer reviewer(s) shall concur in this conclusion and affirm to it in writing. The Building Official shall either approve this decision or require completion of the indicated work specified in this section prior to approval.*

~~1648A.1.1 [For DSA/SS]~~ ~~The existing or retrofitted structure shall be demonstrated to have the capability to sustain the deformation response due to the specified earthquake ground motions and yield a building of reliable stability when subjected to the prescribed design earthquake loads and conditions. When the evaluation indicates the structural elements of the building do not meet the objective of the safety goals of this division, then a retrofit and/or repair design shall be prepared that yields a structure that meets the protection of life and property for a seismic event based on ground shaking having a 10 percent probability of exceedance in 50 years and the maximum considered earthquake at the performance level for collapse prevention.~~

~~***1648A.1.2 [For DSA/SS]*** *The evaluation and retrofit design provisions of FEMA 356, "Prestandard and Commentary for the Seismic Rehabilitation of Buildings", November 2000, shall be used for evaluation and retrofit of the existing building; except that the ground motion characterization shall be in accordance with Section 1648A.2.2. Any of the methodologies contained in FEMA 356, "Prestandard and Commentary for the Seismic Rehabilitation of Buildings", hereafter referred to as the "approach", may be used subject to the approval of the peer reviewer (Section 1649A) and the DSA in accordance with the procedures of Section 1640A.8 and the provisions of this division.*~~

~~*For application of the procedures of FEMA 356 to structural elements, the acceptance criteria factor (e.g. m, ε, rotation) for the protection of life and property shall be at a performance level between the life safety (LS) and immediate occupancy (IO) performance levels and shall be interpolated as follows:*~~

~~*Acceptance criteria factor (e.g. m, ε, rotation) = LS - 0.33 (IO – LS),*~~
~~*where the factors for systems and components are defined in the material chapters of FEMA 356.*~~

> ~~***EXCEPTION:*** *An alternative evaluation and retrofit methodology that will yield a structure of equal or greater reliability than a structure evaluated and retrofitted to FEMA 356 may be used subject to the approval of the peer reviewer(s) and the DSA in accordance with the procedures of Section 1640A.8.*~~

~~***1648A.2 [Not adopted by DSA-SS]***~~ ***3419.2*** *The approach, models, analysis procedures, assumptions on material and system behavior, and conclusions shall be peer reviewed in accordance with the requirements of Section ~~1649A~~ 3420 and accepted by the peer reviewer(s).*

Exceptions:

1. *The enforcement agency may perform the work of peer review when qualified staff is available within the jurisdiction.*
2. *The enforcement agency may modify or waive the requirements for peer review when appropriate.*

~~***1648A.2.1 [For DSA/SS]*** *The approach, models, analysis procedures, assumptions on material and system behavior, and conclusions shall be peer reviewed in accordance with the requirements of Section 1649A and accepted by DSA.*~~

~~***EXCEPTION:*** *When determined appropriate by DSA, DSA may perform the work of peer review.*~~

~~***1648A.2.2 [For DSA/SS]*** *The following provisions apply to wood and light-gage metal frame buildings:*~~
~~*1. The linear procedures of FEMA 356 may be used for evaluation and retrofit of wood and light-gage metal frame buildings. Non-linear procedures shall not apply.*~~

~~*2. Lateral force resisting diaphragms and shear wall systems shall be in accordance with Section 1643A.15.*~~

~~***1648A.2.3 [Not adopted by DSA-SS]*** *The approach used in the development of the design shall be acceptable to the peer reviewer. Approaches that are specifically tailored to the type of building, construction materials and specific building characteristics may be used, if they are acceptable to the independent peer reviewer. Section 1648A.3 provides several approaches that may be considered. The following conditions apply to whatever approach is selected.*~~

> ~~***[For DSA/SS]*** *The following conditions apply to whatever approach is selected.*~~
>
> ~~***1648A.2.3.1*** *If load (e.g., R, β) factors, capacity reduction factors (e.g., Φ), or measures of inelastic deformation capability (e.g., IDR_L, μ, $ε_L$, rotation, $θ_L$) are used, the basis for their use and the specific values assigned shall be assessed and supported in a consistent manner.*~~
>
> ~~***1648A.2.3.2*** *Where dynamic time history analysis is used, at least three distinct representative records with simultaneous loadings in different directions, as appropriate, shall be used in the analysis. The maximum response parameter of interest shall be used for design.*~~

~~***1648A.2.3.3*** *When an elastic analysis approach is adopted, the stiffness characteristics for the elements of the elastic model should be representative of the inelastic behavior at the maximum response for the strength degrading materials and the nominal strength deformation for nondegrading materials. The following items are given for consideration:*~~

~~*1. For reinforced concrete frame elements and reinforced concrete and masonry shear wall elements, this stiffness may be taken as one-half of that of the gross section or that of the cracked section. A more appropriate value may be used if justified by analysis.*~~

~~*2. Steel framing and bracing elements are to have their elastic section stiffness.*~~

~~*3. Steel-framing elements encased in reinforced concrete are to have the composite section stiffness which may be taken as 1.3 times the concrete gross-section stiffness, and beam-column joints may be assumed to be rigid.*~~

~~*4. Framing elements shall have model lengths equal to the clear span length, or have a suitable rigid element representation of the joint configuration.*~~

~~*5. If framing element connections and/or supports are not fully rigid, then these shall be modeled as springs.*~~

~~*6. The representation of foundation flexibility shall be included when it results in more than a 25-percent reduction in the assumed full fixity of supported elements. This includes the effects of both rotational and horizontal deformations and sliding.*~~

~~***1648A.2.3.4*** *Reliable capacities shall be used for all elements, consistent with the fundamental behavior of the element and/or system under reversing loads at the design level of earthquake loads.*~~

~~***1648A.2.3.5*** *The value of the earthquake loading of an element need not exceed the force action induced in the element when the inelastic structure is displaced due to the prescribed ground motions, and the elements are assigned their probable strength values.*~~

~~***1648A.2.3.6*** *All nonstructural elements that can affect life safety shall be shown to have acceptable behavior in the design loadings. For structural elements not considered as part of the lateral-load resis*ting system, the requirements of Section 1644A.13 are sufficient to meet this requirement.~~

~~***1648A.2.4*** *The ground motion characterization used for Method B shall be consistent with those required by Section 1643A.8.*~~

~~***1648A.2.4.1.1 [For DSA/SS]*** *The ground motion characterization used for Method B shall be based on ground shaking having a 10 percent probability of exceedance in 50 years at a performance level for the protection of life and property and the maximum considered earthquake at the performance level for collapse prevention.*~~

~~*Ground shaking having a 10 percent probability of exceedance in 50 years need not exceed 2/3 of the maximum considered earthquake. Ground shaking response spectra for use in Method B shall be determined in accordance with either the General Procedure of Section 1648A.2.4.2.1 or the Site-Specific Procedure of Section 1648A.2.4.3.*~~

~~*In the General Procedure, ground shaking hazard is determined from the response spectrum acceleration contour maps. Maps showing 5-percent-damped response spectrum ordinates for short-period (0.2 second) and long-period (1 second) response distributed by FEMA for use with FEMA 356, "Prestandard and Commentary for the Seismic Rehabilitation of Existing Buildings" shall be used directly with the General Procedure of Section 1648A.2.4.2.1 for developing design response spectra for either or both the 10 percent probability of exceedance in 50 years and the*~~
~~*maximum considered earthquake. In the Site-Specific Procedure, ground shaking hazard is determined using a specific study of the faults and seismic source zones that may affect the*~~

~~*site, as well as evaluation of the regional and geologic conditions that affect the character of the site ground motion caused by events occurring on these faults and sources.*~~

~~*The General Procedure may be used for any building except as specified below. The Site-Specific Procedure may also be used for any building and shall be required where any of the following apply:*~~

~~*1. The building site is located within 10 kilometers of an active fault.*~~

~~*2. The building is located on Type E soils (as defined in Section 1648A.2.4.2.1) and the mapped maximum considered earthquake spectral response acceleration at short periods (S_s) exceeds 2.0g.*~~

~~*3. The building is located on Type F soils as defined in Section 1648A.2.4.2.1.*~~

> ~~***EXCEPTION:*** *Where S_s determined in accordance with Section 1648A.2.4.2.1, < 0.20g. In these cases, a Type E soil profile may be assumed.*~~

~~*4. A time-history response analysis of the building is performed as part of the design.*~~

~~***1648A.2.4.2.1 [For DSA/SS] General procedure to determine the acceleration response spectra.*** *The general procedures of this section shall be used to determine the acceleration response spectra.*~~

~~*Deterministic estimates of earthquake hazard, in which an acceleration response spectrum is obtained for a specific magnitude earthquake occurring on a defined fault, shall be made using the Site-Specific Procedures of Section 1648A.2.4.3.1.*~~

~~*The mapped short-period response acceleration parameter, S_s, and mapped response acceleration parameter at a 1-second period, S_1, for 10 percent probability of exceedance in 50 years ground motion shall be obtained directly from the maps distributed by FEMA for use with the FEMA 356,"Prestandard and Commentary for the Seismic Rehabilitation of Existing Buildings". The mapped short-period response acceleration parameter, S_s, and mapped response acceleration parameter at a 1-second period, S_1, for the maximum considered earthquake shall also be obtained directly from the maps.*~~

~~*Parameters S_s and S_1 shall be obtained by interpolating between the values shown on the response acceleration contour lines on either side of the site, on the appropriate map, or by using the value shown on the map for the higher contour adjacent to the site.*~~

~~*The mapped short-period response acceleration parameter, S_s, and mapped response acceleration parameter at a 1-second period, S_1, for 10 percent probability of exceedance in 50 years ground shaking hazards shall be taken as the smaller of the following:*~~

~~*1. The values of the parameters S_s and S_1, respectively, determined for 10 percent probability of exceedance in 50 years ground motion.*~~

~~*2. Two thirds of the values of the parameters S_s and S_1, respectively, determined from the maximum considered earthquake ground motion map.*~~

~~*The design short-period spectral response acceleration parameter, S_{xs}, and the design spectral response acceleration parameter at 1 second, S_{x1}, shall be obtained, respectively, from Equations (48A-1) and (48A-2) as follows:*~~

~~$S_{xs} = F_a S_s$ (48A-1)~~

~~$S_{x1} = F_v S_1$ (48A-2)~~

~~*where F_a and F_v are site coefficients determined respectively from Tables 16A-R-3 and 16A-R-4, based on the site class and the values of the response acceleration parameters S_s and S_1.*~~

~~*Site classes shall be defined as follows:*~~

~~***Class A:*** *Hard rock with measured shear wave velocity, $\bar{v}_s$ > 5,000 ft/sec (1524 m/s).*~~

~~***Class B:*** *Rock with 2,500 ft/sec (762 m/s) < $\bar{v}_s$ < 5,000 ft/sec (1524 m/s).*~~

~~***Class C:*** *Very dense soil and soft rock with 1,200 ft/sec (366 m/s) < $\bar{v}_s$ ≤ 2,500 ft/sec (762 m/s) or with either standard blow count $\bar{N}$ > 50 or undrained shear strength $\bar{s}_u$ > 2,000 pounds per square feet (psf) (96 kN/m2).*~~

~~***Class D:*** *Stiff soil with 600 ft/sec (48 kN/m2) < $\bar{v}_s$ ≤ 1,200 ft/sec (366 m/s) or with 15 < $\bar{N}$ ≤ 50 or 1,000 psf (48 kN/m2) ≤ $\bar{s}_u$ < 2,000 psf (96 kN/m2).*~~

~~***Class E:*** *Any profile with more than 10 feet (3048 mm) of soft clay defined as soil with plasticity index PI > 20, or water content w > 40 percent, and $\bar{s}_u$ < 500 psf (24 kN/m2) or a soil profile with $\bar{v}_s$ < 600 ft/sec (183 m/s). If insufficient data are available to classify a soil profile as Type A through C, and there is no evidence of soft clay soils characteristic of Class E in the vicinity of the site, the default site class may be taken as Class D. If there is evidence of Class E soils in the vicinity of the site, and no other data supporting selection of Class A through D, the default site class shall be taken as Class E.*~~

~~***Class F:*** *Soils requiring site-specific evaluations:*~~

~~*1. Soils vulnerable to potential failure or collapse under seismic loading, such as liquefiable soils, quick and highly sensitive clays, collapsible weakly cemented soils.*~~

~~*2. Peats and/or highly organic clays (H > 10 feet (3048 mm) of peat and/or highly organic clay, where H = thickness of soil).*~~

~~*3. Very high plasticity clays (H > 25 feet (7620 mm) with PI > 75 percent).*~~

~~*4. Very thick soft/medium stiff clays (H > 120 feet) [36 576 mm].*~~

~~*The parameters $\bar{v}_s$, $\bar{N}$ and $\bar{s}_u$ are, respectively, the average values of the shear wave velocity, Standard Penetration Test (SPT) blow count, and undrained shear strength of the upper 100 feet (30 480 mm) of soils at the site. These values shall be calculated from Equation (48B-3):*~~

$$\bar{v}_s,\ \bar{N},\ \bar{s}_u = \frac{\sum_{i=1}^{n} d_i}{\sum_{i=1}^{n} \frac{d_i}{v_{si}},\ \frac{d_i}{N_i},\ \frac{d_i}{s_{ui}}}$$

~~*(48B-3)*~~

~~***WHERE:***~~

~~*N_i = SPT blow count in soil layer "i".*~~

~~*n = Number of layers of similar soil materials for which data is available.*~~

~~*d_i = Depth of layer "i".*~~

~~*s_{ui} = Undrained shear strength in layer "i".*~~

~~*v_{si} = Shear wave velocity of the soil in layer "i".*~~

~~*and*~~

$$\sum_{i=1}^{n} d_i = 100 \text{ ft} \qquad (48B\text{-}4)$$

Where reliable v_s data are available for the site, such data shall be used to classify the site. If such data are not available, N data shall be used for cohesionless soil sites (sands, gravels), and s_u data for cohesive soil sites (clays). For rock in profile classes B and C, classification may be based either on measured or estimated values of v_s. Classification of a site as Class A rock shall be based on measurements of v_s either for material at the site itself, or for similar rock materials in the vicinity; otherwise, Class B rock shall be assumed. Class A or B profiles shall not be assumed to be present if there is more than 10 feet (3048 mm) of soil between the rock surface and the base of the building.

A general, horizontal response spectrum shall be constructed by plotting the following two functions in the spectral acceleration vs. structural period domain, as shown in Figure 1-1 of FEMA 356, "Prestandard and Commentary for the Seismic Rehabilitation of Existing Buildings". Where a vertical response spectrum is required, it may be constructed by taking two-thirds of the spectral ordinates, at each period, obtained for the horizontal response spectrum.

$$S_a = S_{xs}\left[\left(\frac{5}{B_s} - 2\right)\frac{T}{T_s} + 0.4\right] \qquad (48A\text{-}5)$$

for $0 < T < T_o$, and

$$S_a = \frac{S_{XS}}{B_S} \quad \text{for} \quad T < T_s, \text{ and} \qquad (48A\text{-}6)$$

$$S_a = \frac{S_{X1}}{B_1\, T} \quad \text{for} \quad T > T_s \qquad (48A\text{-}7)$$

where T_s and T_o are given by Equations 48A-8 and 48A-9 is given by the equation

$$T_s = \frac{S_{X1}\, B_S}{S_{XS}\, B_1}, \qquad (48A\text{-}8)$$

$$T_o = 0.2\, T_s \qquad (48A\text{-}9)$$

where B_s and B_1 are taken from Table 16A-R-5.

Use of spectral response accelerations calculated using Equation 48A-5 in the extreme short period range ($T < T_o$) shall only be permitted in dynamic analysis procedures and only for modes other than the fundamental mode.

A 5-percent damped response spectrum shall be used for the design of buildings and structural systems, with the following exceptions:

1. *For structures without exterior cladding, an effective viscous damping ratio, β, equal to 2 percent of critical damping shall be assumed.*

2. *For structures with wood diaphragms and a large number of interior partitions and cross walls that interconnect the diaphragm levels at a maximum spacing of 40 feet on center transverse to the direction of motion, an effective viscous damping ratio, β, of 10 percent of critical damping shall be permitted.*

~~3. For structures rehabilitated using seismic isolation technology or enhanced energy dissipation technology, the equivalent effective viscous damping ratio, β, shall be determined in accordance with Section 1629A.10.2.~~

~~**1648A.2.4.3.1 [For DSA/SS] Site-specific procedure to determine the acceleration response spectra.** Where site-specific ground shaking characterization is selected, or required by DSA, as the basis of the rehabilitation design, the characterization shall be developed in accordance with this section.~~

~~Development of site-specific response spectra shall be based on the geologic, seismologic and soil characteristics associated with the specific site. Response spectra shall be developed for an equivalent viscous damping ratio of 5 percent of critical damping. Additional spectra may be developed for other damping ratios appropriate to the indicated structural behavior, as discussed in Section 1648A.2.2.2.1. The 5-percent damped site-specific spectral amplitudes in the period range of the greatest significance to the structural response shall not be less than 70 percent of the spectral amplitudes of the General Response Spectrum.~~

~~The maximum considered earthquake ground motion shall be taken as that motion represented by a 5% damped acceleration response spectrum having a 2 percent probability of exceedance within a 50 year period. The maximum considered earthquake spectral response acceleration, S_{aM}, at any period, T, shall be taken from that spectrum as limited by the following:~~

~~Where the spectral response ordinates at 0.2 second or 1 second for a 5% damped spectrum having a 2% probability of exceedance within a 50 year period exceeds the corresponding ordinates of the deterministic limit on the maximum considered earthquake ground motion, the maximum considered earthquake ground motion spectrum shall be taken as the lesser of the probabilistic maximum considered earthquake ground motion or the deterministic maximum considered earthquake ground motion spectrum but not less than the deterministic limit on the maximum considered earthquake ground motion.~~

~~The deterministic limit on the maximum considered earthquake ground motion shall be taken as the response spectrum determined in accordance with Figure 16A-R-2, where F_a and F_v are determined in accordance with Section 1648A2.2.2.1 with the value of the mapped short period spectral response acceleration, S_S, taken as 1.5g and the value of the mapped spectral response acceleration at 1 second, S_1, taken as 0.6g.~~

~~The deterministic maximum considered earthquake ground motion response spectrum shall be calculated as 150% of the median spectral response accelerations, S_{aM}, at all periods resulting from a characteristic earthquake on any known active fault within the region.~~

~~The site-specific response acceleration parameters for ground motion having a 10% probability of exceedance in 50 years shall be taken as the lesser of:~~

~~1. The values of the parameters, S_s and S_1, from mean probabilistic site-specific spectra at the 10%/50 year probability of exceedance, and~~

~~2. Two-thirds of the values of the parameters, S_s and S_1, determined for the maximum considered earthquake based on site-specific spectra.~~

~~When a site-specific response spectrum has been developed and other sections of these regulations require values for the spectral response parameters, S_{xs}, S_{x1}, or T_s, they shall be obtained in accordance with this section. The value of the design spectral response acceleration at short periods, S_{xs}, shall be taken as the response acceleration obtained from the site-specific spectrum at a period of 0.2 second, except that it shall be taken as not less than 90 percent of the peak response acceleration at any period. In order to obtain a value for the design spectral response acceleration parameter S_{x1}, a curve of the form $S_a = S_{x1}/T$ shall be graphically overlaid on the site-specific spectra such that at any period, the value of S_a obtained from the curve is not less than 90 percent of that which would be obtained directly~~

~~*from the spectra. The value of T_s shall be determined in accordance with Equation (48A-10). Alternatively, the values obtained in accordance with Section 1648A.2.2.2.1 may be used for all of these parameters.*~~

~~$T_s = S_{x1} / S_{xs}$ (48A-10)~~

~~*Time-history analysis shall be performed with no fewer than three data sets (two horizontal components or, if vertical motion is to be considered, two horizontal components and one vertical component) of appropriate ground motion time histories that shall be selected and scaled from no fewer than three recorded events. Appropriate time histories shall have magnitude, fault distances and source mechanisms that are consistent with those that control the design earthquake ground motion. Where three appropriate recorded ground-motion time-history data sets are not available, appropriate simulated time-history data sets may be used to make up the total number required. For each data set, the square root of the sum of the squares (SRSS) of the 5-percent damped site-specific spectrum of the scaled horizontal components shall be constructed. The data sets shall be scaled such that the average value of the SRSS spectra does not fall below 1.4 times the 5-percent damped spectrum for the design earthquake for periods between 0.2T second and 1.5T seconds (where T is the fundamental period of the building).*~~

~~*Where three time-history data sets are used in the analysis of the structure, the maximum value of each response parameter (e.g., force in a member, displacement at a specific level) shall be used to determine design acceptability. Where seven or more time-history data sets are employed, the average value of each response parameter shall be used to determine design acceptability.*~~

~~***1648A.2.5*** *Whatever evaluation or analysis method is used in meeting the requirements of Section 1648A, the designer shall, unless the exception of Section 1648A.1 applies, at a minimum:*~~

~~***[For DSA/SS]*** *Whatever evaluation or analysis method is used in meeting the requirements of Section 1648A, the designer shall, at a minimum:*~~

~~***1648A.2.5.1*** *Identify all elements and systems (both vertical and horizontal) that are subject to the response loads and deformations due to the specified maximum expected earthquake ground shaking. Elements include beams, columns, joints, connections, walls, diaphragms, construction joints, precast element joints, exterior panel connections, bracing, diaphragms, collectors, diaphragm-to-wall or frame connection and foundations.*~~

~~***1648A.2.5.2*** *Identify the vertical elements (e.g., walls, frames, braced frames, in-filled frames, moment frames, etc.) that will participate in the lateral-load-resisting system.*~~

~~***1648A.2.5.3*** *Identify the horizontal or nearly horizontal elements that form the diaphragm systems that interconnect the vertical elements, along with the chords, drags or collector elements, and connections to the vertical systems, and the internal connections within the diaphragm (precast planks, metal decking, bracing systems, pour-strips for prestressed slabs, etc.).*~~

~~***1648A.2.5.4*** *Identify the foundation system supporting the lateral-load-resisting system, including all connections and the means of resisting the actions of overturning moment and sliding.*~~

~~***1648A.2.5.5*** *Assign the expected strength level to all elements for all of their possible modes of yielding or failure. For reinforced concrete, use nominal capacity. For structural steel, use either 1.7 times allowable stress capacity or the nominal capacity from LRFD. For all other materials, use either 1.7 times allowable stress capacity or estimated strength from tests and/or existing research results.*~~

~~***1648A.2.5.6*** *Assign the effective elastic stiffness for all elements for each type and directional sense of action (flexural, shear, torsion, axial) that the element shall resist. The effective stiffness should be the best estimate of the secant stiffness at the development of the element strength representing the onset of the constant yield threshold.*~~

~~***1648A.2.5.7*** *Assign the element deformation behavior beyond the development of the strength or constant yield threshold for each mode of failure or yielding. Identify elements having a sudden brittle or buckling mode of failure. The effects of reversed cycles of loading should be considered to evaluate the degree of strength degradation and/or the pinching of the shape of the hysterisis loop. The deformation behavior may be in the form of load-deformation curves, allowable inelastic demand ratio (IDR_L) values, or allowable ductility demand (μ_L) values, or maximum allowable strain values ε_L or allowable rotation values θ_L. The classification of the elements as "ductile," "limited-ductile," or "nonductile" may be a part of the element deformation behavior description.*~~

~~***1648A.2.6*** *Prior to implementation, the procedures, methods, material assumptions and acceptance/rejection criteria proposed by the engineer will be peer reviewed as provided in Section 1649A.*~~

~~***1648A.2.7*** *The conclusions and design decisions shall be reviewed and accepted by the peer reviewer(s).*~~

3419.2.1 *The approach used in the development of the design shall be acceptable to the peer reviewer and the Enforcement Agency and shall be the same method as used in the evaluation of the building. Approaches that are specifically tailored to the type of building, construction materials and specific building characteristics may be used, if they are acceptable to the independent peer reviewer. The use of Method A allowed procedures may also be used under Method B.*

3419.2.2 *Any method of analysis may be used, subject to acceptance by the peer reviewer(s) and the Building Official. If the specific characteristics of the structure warrant their use, the procedures given in the following documents may be employed: ASCE 41; FEMA 440/ATC 55; ATC 40; The general requirements given in ASCE 41 Chapter 2 shall be complied with unless exceptions are accepted by the peer reviewer(s) and Building Official. Use of other than ASCE 41 procedures in Method B requires Building Official concurrence before implementation.*

3419.2.3 *Prior to implementation, the procedures, methods, material assumptions and acceptance/rejection criteria proposed by the registered design professional will be peer reviewed as provided in Section 3420. Where non-linear procedures are used, prior to any analysis the representation of the seismic ground motion shall be reviewed and approved by the peer reviewer(s) and the Building Official.*

3419.2.4 *The conclusions and design decisions shall be reviewed and accepted by the peer reviewer(s) and the Building Official.*

Notation (For DSA-SS):
Authority: Education Code Sections 17280.5, 17310
Reference: Education Code Sections 17280 - 17317

SECTION 3420 - PEER REVIEW REQUIREMENTS

~~***1649A.1***~~ ***3420.1*** **General.** *Independent peer review is an objective, technical review by knowledgeable reviewer(s) experienced in the structural design, analysis and performance issues involved. The reviewer(s) shall examine the available information on the condition of the building, the basic engineering concepts employed, and the recommendations for action.*

~~*[For DSA/SS: DSA may require more than one peer reviewer, creating a peer review team, to provide expertise relating to specific aspects of construction and/or the evaluation and retrofit design. When a peer review team is required, the owner shall designate a chairperson to manage the peer review process and prepare any reports required in this section.]*~~

~~***1649A.2 [Not adopted by DSA-SS]***~~ ***3420.2*** **Timing of Independent Review.** *The independent reviewer(s) shall be selected prior to initiation of substantial portions of the design and/or analysis work that is to be reviewed, and review shall start as soon as practical after Method B is adopted and sufficient information defining the project is available.*

~~***1649A.2.1 [For DSA/SS] Timing of Independent Review.*** *The peer reviewer(s) shall be retained in a timely manner to provide services in accordance with the procedures specified in Section 1640A.8.3.*~~

~~1649A.3~~ ***3420.3*** ***Qualifications and Terms of Employment.*** *The reviewer(s) shall be independent from the design and construction team.*

~~1649A.3.1~~ ***3420.3.1*** *The reviewer(s) shall have no other involvement in the project before, during or after the review, except in a review capacity.*

~~1649A.3.2~~ ***3420.3.2*** *The reviewer(s) shall be selected and paid by the owner and shall have technical expertise in ~~repair~~ the evaluation and retrofit of buildings similar to the one being reviewed, as determined by the ~~responsible~~ enforcement agency.*

~~1649A.3.3~~ ***3420.3.3*** *The reviewer (or in the case of review teams, the chair) shall be a California-licensed structural engineer who is familiar with the technical issues and regulations governing the work to be reviewed.*

Exception: *Other individuals with acceptable qualifications and experience may be a peer reviewer(s) with the approval of the Building Official.*

~~1649A.3.4~~ ***3420.3.4*** *The reviewer shall serve through completion of the project and shall not be terminated except for failure to perform the duties specified herein. Such termination shall be in writing with copies to the enforcement agency, owner, and the ~~engineer of record~~ registered design professional. When a reviewer is terminated or resigns, a qualified replacement shall be appointed within 10 working days, and the reviewer shall submit copies of all reports, notes and correspondence to the responsible Building Official, the owner, and the registered design professional within 10 working days of such termination.*

~~DSA/SS~~*~~: If the reviewer resigns or is terminated by the owner prior to completion of the project, then the reviewer shall submit copies of all reports, notes and correspondence to the design professional in responsible charge, the owner, and DSA within 10 working days of such termination.]~~*

3420.3.5 *The peer reviewer shall have access in a timely manner to all documents, materials and information deemed necessary by the peer reviewer to complete the peer review.*

~~1649A.4 [Not adopted by DSA-SS]~~ ***3420.4*** ***Scope of Review.*** *Review activities shall include, where appropriate, available construction documents, design criteria, and representative observations of the condition of the structure, all inspection and testing reports, including methods of sampling, analytical models and analyses prepared by the ~~engineer of record~~ registered design professional and consultants, and the retrofit or repair design. Review shall include consideration of the proposed design approach, methods, materials, details, and constructability. Changes observed during construction that affect the seismic-resisting system shall be reported to the reviewer in writing for review and recommendation.*

~~1649A.4.1 [For DSA/SS] Scope of Review.~~ *~~Review activities shall include, where appropriate, available new and original construction documents, observations of the condition of the structure, all new and original inspection and testing reports, including methods of sampling, and analyses prepared by the project structural engineer and consultants. Review shall consider the proposed design approach, retrofit or repair methods, materials and details for appropriateness to the performance objectives. Where required by DSA, changes observed during construction that affect the seismic-resisting system or the approved retrofit shall be reported to the peer reviewer by the design professional for review and recommendations.~~*

~~1649A.5 [Not adopted by DSA-SS]~~ ***3420.5*** ***Reports.*** *The reviewer(s) shall prepare a written report to the owner and ~~responsible enforcement agent~~ Building Official that covers all aspects of the review performed, including conclusions reached by the reviewer(s). Reports shall be issued after the schematic phase, during design development, and at the completion of construction documents but prior to ~~their issuance for permit~~ submittal of the project plans to the Enforcement Agency for plan review. When acceptable to the Building Official the requirement for a Report during a specific phase of the project development may be waived.*

Such reports should include, at the minimum, statements of the following.

1. *Scope of engineering design peer review with limitations defined.*
2. *The status of the project documents at each review stage.*

3. Ability of selected materials and framing systems to meet performance criteria with given loads and configuration.

4. Degree of structural system redundancy and the deformation compatibility among structural and nonstructural components.

5. Basic constructability of the retrofit or repair system.

6. Other recommendations that would be appropriate to the specific project.

7. Presentation of the conclusions of the reviewer identifying any areas that need further review, investigation and/or clarification.

8. Recommendations.

The last report prepared prior to submittal of permit documents to the enforcement agency shall include a statement indicating that the design is in conformance with the approved evaluation and design criteria.

~~1649A.5.1 [For DSA/SS] Reports.~~ ~~The reviewer(s) shall prepare a written report to the owner and responsible DSA that covers all aspects of the review performed, including conclusions reached by the reviewer, in accordance with Section 1640A.8.3. Such reports shall address the following.~~

~~1. Scope of engineering design peer review performed during phase of work.~~

~~2. The status of the project documents and/or analyses at each review stage.~~

~~3. Ability of structural and nonstructural materials and framing systems to meet the performance objective.~~

~~4. Basic constructability of the retrofit or repair system.~~

~~5. Recommendations that would be appropriate to the specific project.~~

~~6. Presentation of the conclusions of the reviewer identifying any areas that need further review, investigation and/or clarification.~~

~~7. Compliance with the evaluation and retrofit report criteria per Section 1640A.8.~~

~~1649A.6 [Not adopted by DSA-SS]~~ 3420.6 Responses and ~~Corrective Actions~~ Resolutions. *The ~~engineer of record~~ registered design professional shall review the report from the reviewer(s) and shall develop corrective actions and responses as appropriate. Changes observed during construction that affect the seismic-resisting system shall be reported to the reviewer in writing for review and recommendations. All reports, responses and ~~corrective actions~~ resolutions prepared pursuant to this section shall be submitted to the responsible enforcement agency and the owner along with other plans, specifications and calculations required. If the reviewer resigns or is terminated prior to completion of the project, then the reviewer shall submit copies of all reports, notes and correspondence to the responsible ~~enforcement agent~~ Building Official, the owner, and the ~~engineer of record~~ registered design professional within 10 working days of such termination.*

~~1649A.6.1 [For DSA/SS] Responses and Corrective Actions.~~ ~~The project structural engineer shall review the report from the peer reviewer(s) and shall develop corrective actions and other responses as appropriate. During the design development and construction document phases, all reports, responses and corrective actions prepared pursuant to this section shall be submitted to the project design professional, the owner and DSA.~~

~~1649A.7~~ 3420.7 Resolution of Conflicts. *When the conclusions and recommendations of the peer reviewer conflict with the registered design professional's proposed design, the ~~DSA~~ Enforcement Agency shall make the final determination of the requirement for the design.*

Notation (For DSA-SS):
Authority: Education Code Sections 17280.5, 17310
Reference: Education Code Sections 17280 - 17317

SECTION 3421 - ADDITIONAL REQUIREMENTS FOR PUBLIC SCHOOLS

The requirements of Section 3421 apply only to public schools under the jurisdiction of the Division of the State Architect - Structural Safety (DSA-SS, refer to Section 109.2).

3421.1. Evaluation and Design Criteria Report. *During the schematic phase of the project, the owner or the registered design professional in charge of the design shall prepare and sign an Evaluation and Design Criteria Report in accordance with Part 1, Title 24, C. C. R., Section 4-307(a). The report shall be submitted to the DSA for review and approval prior to proceeding with design development of the rehabilitation.*

The Evaluation and Design Criteria Report shall:

1. *Identify the building(s) structural and non-structural systems, potential deficiencies in the elements or systems and the proposed method for retrofit.*
2. *Identify geological and site-related hazards.*
3. *Propose the methodology for evaluation and retrofit design.*
4. *Propose the complete program for data collection (Section 3416.2).*
5. *Include existing or "as-built" building plans, reports and associated documents of the existing construction.*

3421.2. Rehabilitation Involving Only Portions of Structures. *Where only a portion(s) of a structure is to be rehabilitated, the public school portion of the structure shall:*

1. *Be seismically separated from the unrehabilitated portion in accordance with Chapter 16 of Part 2, Title 24, or the entire structure shall be rehabilitated in accordance with this Section. For structures in which the unrehabilitated portion is above or below the school portion, the entire structure shall be rehabilitated in accordance with this division.*
2. *Be retrofitted as necessary to protect the occupants from falling hazards of the unrehabilitated portion of the building, and;*
3. *Be retrofitted as necessary to protect required exitways being blocked by collapse or falling hazards of the unrehabilitated portion.*

Notation (For DSA-SS):
Authority: Education Code Sections 17280.5, 17310
Reference: Education Code Sections 17280 - 17317

Chapter 34A - Existing Structures

2001 CBC	PROPOSED ADOPTION	OSHPD		Comments
		1	4	
	Adopt entire chapter without amendments			
	Adopt entire chapter with amendments listed below	X	X	
	Adopt only those sections listed below			
	3401A.1	X	X	
1627A / 1641A CA	3402A.1	X	X	Relocated existing California Building Standards into IBC format
	3403A.2.3.3	X	X	Adoption of FEMA 356
	3406A.4	X	X	
	3410A.2	X	X	
	3410A.2.4	X	X	
1638A CA	3411 CA	X	X	Relocated existing California Building Standards into IBC format
1640A CA	3412A CA	X	X	Relocated existing California Building Standards into IBC format
	3413A CA	X	X	
1648A.1 CA	3413A.1 CA	X	X	Relocated existing California Building Standards into IBC format
	3413A.2 CA	X	X	Modifications to FEMA 356
1649A CA	3414A CA	X	X	Relocated existing California Building Standards into IBC format

EXPRESS TERMS

SECTION 3401*A* GENERAL

3401*A*.1 Scope. The provisions of this chapter shall control the alteration, repair, addition and change of occupancy of existing structures *for applications listed in Sections 110.1 (OSHPD 1), and 110.4 (OSHPD 4) regulated by the Office of Statewide Health Planning and Development (OSHPD).*

These applications include hospitals, skilled nursing facilities, intermediate care facilities and correctional treatment centers.

> ***Exception** [For OSHPD 2]**:** Single-story Type V skilled nursing or intermediate care facilities utilizing wood-frame or light-steel-frame construction as defined in Health and Safety Code Section 129725, which shall comply with CBC Chapter 34 and any applicable amendments therein.*

Exception: Existing bleachers, grandstands and folding and telescopic seating shall comply with ICC 300-02.

3401*A*.2 Maintenance. Buildings and structures, and parts thereof, shall be maintained in a safe and sanitary condition. Devices or safeguards which are required by this code shall be maintained in conformance with the code edition under which installed. The owner or the owner's designated agent shall be responsible for the maintenance of buildings and structures. To determine compliance with this subsection, the building official shall have the authority to require a building or structure to be re-inspected. The requirements of this chapter shall not provide the basis for removal or abrogation of fire protection and safety systems and

devices in existing structures.

3401A.3 Compliance with other codes. Alterations, repairs, additions and changes of occupancy to existing structures shall comply with the provisions for alterations, repairs, additions and changes of occupancy in the *California ~~International~~ Fire Code*, *~~International Fuel Gas Code~~*, *California ~~International~~ Mechanical Code*, *California ~~International~~ Plumbing Code*, *~~International Property Maintenance Code, International Private Sewage Disposal Code~~*, *~~International Residential Code~~* and *California ~~ICC~~ Electrical Code*.

SECTION 3402A DEFINITIONS

3402A.1 Definitions. The following term shall, for the purposes of this chapter and as used elsewhere in the code, have the following meaning. *Definition provided in section 1613A.2, ASCE 7 section 11.2 and Chapter 6 of Title 24 Part 1 - Building Standards Administrative Code shall apply when appropriate in addition to terms defined in this section*:

(Relocated from 1627A, 2001CBC) ***APPROVED EXISTING BUILDING****. Any building originally constructed in compliance with the requirements of 1973 or subsequent edition of California Building Code.*

(Relocated from 1627A, 2001CBC) ***ASSOCIATED STRUCTURAL ALTERATIONS*** *means any change affecting existing structural elements or requiring new structural elements for vertical or lateral support of an otherwise nonstructural alteration.*

(Relocated from 1641A, 2001CBC) ***DESIGN*** *is the procedure that includes both the evaluation and retrofit design of an existing element and design of new element.*

(Relocated from 1641A, 2001CBC) ***DESIGN EARTHQUAKE*** *is the earthquake ground motion defined in section 3413A.2.3.2.*

(Relocated from 1641A, 2001CBC) ***ESSENTIAL LIFE SAFETY*** *is the retrofit or repair of a structure to a goal of essential life safety as a level of expected structural performance taken to mean that occupants will be able to exit the structure safely following an earthquake. It does not mean that they will be uninjured or not be in need of medical attention. A structure is presumed to achieve this level of performance where, although significant damage to the structure may have occurred, some margin against either total or partial structural collapse remains, even though damage may not be economical to repair; major structural elements have not become dislodged or fallen so as to pose a life-safety threat; and, nonstructural systems or elements, which are heavy enough to cause severe injuries either within or outside the building, have not become dislodged so as to pose a life-safety threat. This level of structural performance is equivalent to SPC-2.*

(Relocated from 1627A, 2001CBC) ***INCIDENTAL STRUCTURAL ALTERATIONS OR ADDITIONS*** *are alterations or additions which would not reduce the story lateral shear force-resisting capacity by more than 5 percent or increase the story shear by more than 5 percent in any existing story.*

(Relocated from 1641A, 2001CBC) ***IMMEDIATE OCCUPANCY -*** *The retrofit or repair of a structure to a goal of immediate occupancy as a level of expected performance is taken to mean the post-earthquake damage state in which limited structural and non-structural damage has occurred. The original strength and stiffness of structure is substantially retained, with minor cracking and yielding of structural elements. Basic access and life safety systems, including doors, stairways, elevators, emergency lighting, fire alarms and suppression systems, remain operable, provided that utilities are available. It is expected that occupants could safely remain in the building, although normal use may be impaired and some clean-up, inspection and limited structural and non-structural repairs may be required. This level of expected structural performance is equivalent to SPC-3 through SPC-5.*

(Relocated from 1627A, 2001CBC) ***MAJOR STRUCTURAL ALTERATIONS OR ADDITIONS*** *are those alterations or additions of greater extent than minor structural alterations or additions.*

(Relocated from 1627A, 2001CBC) ***MINOR STRUCTURAL ALTERATIONS OR ADDITIONS*** *are alterations or additions of greater extent than incidental structural additions or alterations which would not reduce the story shear lateral-force-resisting capacity by more than 10 percent or increase base shear by more than 10 percent.*

(Relocated from 1627A, 2001CBC) ***NONREQUIRED STRUCTURAL ALTERATION*** *is any alteration of existing structural element or provision of new structural elements which is not necessary for vertical or lateral support of other work and is initiated by the applicant primarily for the purpose of increasing the vertical or lateral load-carrying strength or stiffness of an existing building.*

(Relocated from 1627A, 2001CBC) ***NONSTRUCTURAL ALTERATION*** *is any alteration which neither affects existing structural elements nor requires new structural elements for vertical or lateral support and which does not increase the lateral shear force in any story by more than 5 percent.*

NONSTRUCTURAL PERFORMANCE CATEGORY (NPC) *are the building performance categories for Hospital Buildings defined in Table 11.1of California Building Standards Administrative Code (Part 1, Title 24 CCR), Chapter 6.*

(Relocated from 1641A, 2001CBC) ***PEER REVIEW*** *refers to procedure contained in Section 3414A.*

PRIMARY FUNCTION. A primary function is a major activity for which the facility is intended. Areas that contain a primary function include, but are not limited to, the customer service lobby of a bank, the dining area of a cafeteria, the meeting rooms in a conference center, as well as offices and other work areas in which the activities of the public accommodation or other private entity using the facility are carried out. Mechanical rooms, boiler rooms, supply storage rooms, employee lounges or locker rooms, janitorial closets, entrances, corridors and restrooms are not areas containing a primary function.

(Relocated from 1627A, 2001CBC) ***RECONSTRUCTION*** *means rebuilding of any existing building to bring it into full compliance with these regulations.*

(Relocated from 1641A, 2001CBC) ***REPAIR*** *as used in this division means all the design and construction work affecting existing or requiring new structural elements undertaken to restore or enhance the structural and nonstructural load resisting system participating in lateral response of a structure primarily intended to correct the effects of deterioration or impending or actual failure, regardless of cause.*

STRUCTURAL PERFORMANCE CATEGORY (SPC) *are the building performance categories for Hospital Buildings defined in Table 2.5.3 of California Building Standards Administrative Code (Part 1, Title 24 CCR), Chapter 6.*

TECHNICALLY INFEASIBLE. An alteration of a building or a facility that has little likelihood of being accomplished because the existing structural conditions require the removal or alteration of a load-bearing member that is an essential part of the structural frame, or because other existing physical or site constraints prohibit modification or addition of elements, spaces or features which are in full and strict compliance with the minimum requirements for new construction and which are necessary to provide accessibility.

SECTION 3403*A* ADDITIONS, ALTERATIONS OR REPAIRS

3403*A*.1 Existing buildings or structures. Additions or alterations to any building or structure shall comply with the requirements of the code for new construction. Additions or alterations shall not be made to an existing building or structure that will cause the existing building or structure to be in violation of any provisions of this code. An existing building plus additions shall comply with the height and area provisions of Chapter 5. Portions of the structure not altered and not affected by the alteration are not required to comply with the code requirements for a new structure.

3403*A*.1.1 Flood hazard areas. For buildings and structures in flood hazard areas established in Section 1612A.3, any additions, alterations or repairs that constitute substantial improvement of the existing structure, as defined in Section 1612A.2, shall comply with the flood design requirements for new construction, and all aspects of the existing structure shall be brought into compliance with the requirements for new construction for flood design.

3403*A*.2 Structural. Additions or alterations to an existing structure shall not increase the force in any structural element by more than 5 percent, unless the increased forces on the element are still in compliance with the code for new structures, nor shall the strength of any structural element be decreased to less than that required by this code for new structures. Where repairs are made to structural elements of an existing building, and uncovered structural elements are found to be unsound or otherwise structurally deficient, such elements shall be made to conform to the requirements for new structures.

3403*A*.2.1 Existing live load. Where an existing structure heretofore is altered or repaired, the minimum design loads for the structure shall be the loads applicable at the time of erection, provided that public safety is not endangered thereby.

3403*A*.2.2 Live load reduction. If the approved live load is less than required by Section 1607A, the areas designed for the reduced live load shall be posted in with the approved load. Placards shall be of an approved design.

3403*A*.2.3 Seismic. Additions, alterations or modification or change of occupancy of existing buildings shall be in accordance with this section for the purposes of seismic considerations.

3403*A*.2.3.1 Additions to existing buildings. An addition that is structurally independent from an existing structure shall be designed and constructed with the seismic requirements for new structures. An addition that is not structurally independent from an existing structure shall be designed and constructed such that the entire structure conforms to the seismic-force-resistance requirements for new structures unless the following conditions are satisfied:

1. The addition conforms with the requirements for new structures,
2. The addition does not increase the seismic forces in any structural element of the existing structure by more than *5* ~~*10*~~ percent cumulative since the original construction, unless the element has the capacity to resist the increased forces determined in accordance with ASCE 7, and
3. Additions do not decrease the seismic resistance of any structural element of the existing structure by more than *5* ~~*10*~~ percent cumulative since the original construction, unless the element has the capacity to resist the forces determined in accordance with ASCE 7. If the building's seismic base shear capacity has been increased since the original construction, the percent change in base shear may be calculated relative to the increased value.

3403*A*.2.3.2 Alterations. Alterations are permitted to be made to any structure without requiring the structure to comply with Section 1613A, provided the alterations conform to the requirements for a new structure. Alterations that increase the seismic force in any existing structural element by more than *5* ~~*10*~~ percent cumulative since the original construction or decrease the design strength of any existing structural element to resist seismic forces by more than 5 percent cumulative since the original construction shall not be permitted unless the entire seismic-force-resisting system is determined to conform to ASCE 7 for a new structure. If the building's seismic base shear capacity has been increased since the original construction, the percent change in base shear may be calculated relative to the increased value.

Exception: Alterations to existing structural elements or additions of new structural elements that are not required by ASCE 7 and are initiated for the purpose of increasing the strength or stiffness of the seismic-force-resisting system of an existing structure need not be designed for forces conforming to ASCE 7, provided that an engineering analysis is submitted indicating the following:

1. The design strength of existing structural elements required to resist seismic forces is not reduced.
2. The seismic force to required existing structural elements is not increased beyond their design strength.
3. New structural elements are detailed and connected to the existing structural elements as required by Chapter 16A.
4. New or relocated nonstructural elements are detailed and connected to existing or new structural elements as required by Chapter 16A.
5. The alterations do not create a structural irregularity as defined in ASCE 7 or make an existing structural irregularity more severe.
6. The alterations do not result in the creation of an unsafe condition.

3403A.2.3.3 ADOPTION: *Except for the modifications as set forth in Sections 3411A through 3414A all additions, alterations, repairs and seismic retrofit to existing structures or portions thereof may be designed and constructed in accordance with the provisions of FEMA 356.*

3403A.2.3.3.1 *All Reference Standards listed in FEMA 356 shall be replaced by Referenced Standards listed in Chapter 35 of this code.*

3403A.2.3.3.2 *Use of Material Properties based on Historical Information as default values shall not be permitted.*

3403A.2.3.3.3 *The selection of a particular analysis procedure from FEMA 356 shall be subject to the approval of the enforcement agent.*

3403A.2.3.3.4 *Prior to implementation of FEMA 356 non-linear procedures – the ground motion, analysis and design methods, material assumptions and acceptance criteria proposed by the engineer shall be peer reviewed and / or reviewed by the enforcement agent as provided in section 3414A.*

3403A.2.3.3.5 *The analysis, conclusion and design decisions shall be reviewed and accepted by the peer reviewer(s) and / or enforcement agent.*

3403A.2.3.3.6 Structural observation, testing and inspections. *Construction testing, inspection and structural observation requirements shall be as required for new construction.*

3403*A*.3 Nonstructural. Nonstructural alterations or repairs to an existing building or structure are permitted to be made of the same materials of which the building or structure is constructed, provided that they do not adversely affect any structural member or the fire-resistance rating of any part of the building or structure.

3403A.4 Stairways. An alteration or the replacement of an existing stairway in an existing structure shall not be required to comply with the requirements of a new stairway as outlined in Section 1009 where the existing space and construction will not allow a reduction in pitch or slope.

SECTION 3404A FIRE ESCAPES

3404A.1 Where permitted. Fire escapes shall be permitted only as provided for in Sections 3404A.1.1 through 3404A.1.4.

3404A.1.1 New buildings. Fire escapes shall not constitute any part of the required means of egress in new buildings.
3404A.1.2 Existing fire escapes. Existing fire escapes shall be continued to be accepted as a component in the means of egress in existing buildings only.
3404A.1.3 New fire escapes. New fire escapes for existing buildings shall be permitted only where exterior stairs cannot be utilized due to lot lines limiting stair size or due to the sidewalks, alleys or roads at grade level. New fire escapes shall not incorporate ladders or access by windows.
3404A.1.4 Limitations. Fire escapes shall comply with this section and shall not constitute more than 50 percent of the required number of exits nor more than 50 percent of the required exit capacity.

3404A.2 Location. Where located on the front of the building and where projecting beyond the building line, the lowest landing shall not be less than 7 feet (2134 mm) or more than 12 feet (3658 mm) above grade, and shall be equipped with a counterbalanced stairway to the street. In alleyways and thoroughfares less than 30 feet (9144 mm) wide, the clearance under the lowest landing shall not be less than 12 feet (3658 mm).

3404A.3 Construction. The fire escape shall be designed to support a live load of 100 pounds per square foot (4788 Pa) and shall be constructed of steel or other approved noncombustible materials. Fire escapes constructed of wood not less than nominal 2 inches (51 mm) thick are permitted on buildings of Type 5 construction. Walkways and railings located over or supported by combustible roofs in buildings of Type 3 and 4 construction are permitted to be of wood not less than nominal 2 inches (51 mm) thick.

3404A.4 Dimensions. Stairs shall be at least 22 inches (559 mm) wide with risers not more than, and treads not less than, 8 inches (203 mm) and landings at the foot of stairs not less than 40 inches (1016 mm) wide by 36 inches (914 mm) long, located not more than 8 inches (203 mm) below the door.

3404A.5 Opening protectives. Doors and windows along the fire escape shall be protected with $^{3}/_{4}$-hour opening protectives.

SECTION 3405A GLASS REPLACEMENT

3405A.1 Conformance. The installation or replacement of glass shall be as required for new installations.

SECTION 3406A CHANGE OF OCCUPANCY

3406A.1 Conformance. No change shall be made in the use or occupancy of any building that would place the building in a different division of the same group of occupancy or in a different group of occupancies, unless such building is made to comply with the requirements of this code for such division or group of occupancy. Subject to the approval of the building official, the use or occupancy of existing buildings shall be permitted to be changed and the building is allowed to be occupied for purposes in other groups without conforming to all the requirements of this code for those groups, provided the new or proposed use is less hazardous, based on life and fire risk, than the existing use.
3406A.2 Certificate of occupancy. A certificate of occupancy shall be issued where it has been determined that the requirements for the new occupancy classification have been met.

3406A.3 Stairways. Existing stairways in an existing structure shall not be required to comply with the requirements of a new stairway as outlined in Section 1009 where the existing space and construction will not allow a reduction in pitch or slope.

3406A.4 Change of occupancy. When a change of occupancy results in a structure being reclassified to a higher occupancy category, the structure shall conform to the seismic requirements for a new structure.

Exceptions:

1. Specific seismic detailing requirements of this code or ASCE 7 for a new structure shall not be required to be met where it can be shown that the level of performance and seismic safety is equivalent to that of a new structure. Such

analysis shall consider the regularity, overstrength, redundancy and ductility of the structure within the context of the existing and retrofit (if any) detailing provided.
2. *Not permitted by OSHPD.* ~~*When a change of use results in a structure being reclassified from Occupancy Category I or II to Occupancy Category III and the structure is located in a seismic map area where SDS< 0.33, compliance with the seismic requirements of this code and ASCE 7 are not required.*~~

SECTION 3407*A* HISTORIC BUILDINGS

3407*A*.1 Historic buildings. The provisions of this code relating to the construction, repair, alteration, addition, restoration and movement of structures, and change of occupancy shall not be mandatory for historic buildings where such buildings are judged by the building official to not constitute a distinct life safety hazard.

3407*A*.2 Flood hazard areas. Within flood hazard areas established in accordance with Section 1612A.3, where the work proposed constitutes substantial improvement as defined in Section 1612A.2, the building shall be brought into conformance with Section 1612A.

Exception: Historic buildings that are:

1. Listed or preliminarily determined to be eligible for listing in the National Register of Historic Places; or
2. Determined by the Secretary of the U.S. Department of Interior as contributing to the historical significance of a registered historic district or a district preliminarily determined to qualify as an historic district; or
3. Designated as historic under a state or local historic preservation program that is approved by the Department of Interior.

SECTION 3408*A* MOVED STRUCTURES

3408*A*.1 Conformance. Structures moved into or within the jurisdiction shall comply with the provisions of this code for new structures.

SECTION 3409*A* ACCESSIBILITY FOR EXISTING BUILDINGS

3409*A*.1 Scope. The provisions of Sections 3409*A*.1 through 3409A.9 apply to maintenance, change of occupancy, additions and alterations to existing buildings, including those identified as historic buildings.
Exception: Type B dwelling or sleeping units required by Section 1107 are not required to be provided in existing buildings and facilities.

3409*A*.2 Maintenance of facilities. A building, facility or element that is constructed or altered to be accessible shall be maintained accessible during occupancy.

3409*A*.3 Extent of application. An alteration of an existing element, space or area of a building or facility shall not impose a requirement for greater accessibility than that which would be required for new construction.

Alterations shall not reduce or have the effect of reducing accessibility of a building, portion of a building or facility.

3409*A*.4 Change of occupancy. Existing buildings, or portions thereof, that undergo a change of group or occupancy shall have all of the following accessible features:

1. At least one accessible building entrance.
2. At least one accessible route from an accessible building entrance to primary function areas.
3. Signage complying with Section 1110.
4. Accessible parking, where parking is being provided.
5. At least one accessible passenger loading zone, when loading zones are provided.
6. At least one accessible route connecting accessible parking and accessible passenger loading zones to an accessible entrance.

Where it is technically infeasible to comply with the new construction standards for any of these requirements for a change of group or occupancy, the above items shall conform to the requirements to the maximum extent technically feasible. Change of group or occupancy that incorporates any alterations or additions shall comply with this section and Sections 3409A.5, 3409A.6, 3409A.7 and 3409A.8.

3409A.5 Additions. Provisions for new construction shall apply to additions. An addition that affects the accessibility to, or contains an area of, a primary function shall comply with the requirements in Section 3409A.7.

3409A.6 Alterations. A building, facility or element that is altered shall comply with the applicable provisions in Chapter 11 and ICC A117.1, unless technically infeasible. Where compliance with this section is technically infeasible, the alteration shall provide access to the maximum extent technically feasible.

Exceptions:

1. The altered element or space is not required to be on an accessible route, unless required by Section 3409A.7.
2. Accessible means of egress required by Chapter 10 are not required to be provided in existing buildings and facilities.
3. The alteration to Type A individually owned dwelling units within a Group R-2 occupancy shall meet the provision for a Type B dwelling unit and shall comply with the applicable provisions in Chapter 11 and ICC/ANSI A117.1.

3409A.7 Alterations affecting an area containing a primary function. Where an alteration affects the accessibility to, or contains an area of primary function, the route to the primary function area shall be accessible. The accessible route to the primary function area shall include toilet facilities or drinking fountains serving the area of primary function.

Exceptions:

1. The costs of providing the accessible route are not required to exceed 20 percent of the costs of the alterations affecting the area of primary function.
2. This provision does not apply to alterations limited solely to windows, hardware, operating controls, electrical outlets and signs.
3. This provision does not apply to alterations limited solely to mechanical systems, electrical systems, installation or alteration of fire protection systems and abatement of hazardous materials.
4. This provision does not apply to alterations undertaken for the primary purpose of increasing the accessibility of an existing building, facility or element.

3409A.8 Scoping for alterations. The provisions of Sections 3409A.8.1 through 3409A.8.12 shall apply to alterations to existing buildings and facilities.

3409A.8.1 Entrances. Accessible entrances shall be provided in accordance with Section 1105.

Exception: Where an alteration includes alterations to an entrance, and the building or facility has an accessible entrance, the altered entrance is not required to be accessible, unless required by Section 3409A.7. Signs complying with Section 1110 shall be provided.

3409A.8.2 Elevators. Altered elements of existing elevators shall comply with ASME A17.1 and ICC A117.1. Such elements shall also be altered in elevators programmed to respond to the same hall call control as the altered elevator.

3409A.8.3 Platform lifts. Platform (wheelchair) lifts complying with ICC A117.1 and installed in accordance with ASME A18.1 shall be permitted as a component of an accessible route.

3409A.8.4 Stairs and escalators in existing buildings. In alterations where an escalator or stair is added where none existed previously, an accessible route shall be provided in accordance with Sections 1104.4 and 1104.5.

3409A.8.5 Ramps. Where steeper slopes than allowed by Section 1010.2 are necessitated by space limitations, the slope of ramps in or providing access to existing buildings or facilities shall comply with Table 3409A.8.5.

TABLE 3409A.8.5 RAMPS

SLOPE	MAXIMUM RISE
Steeper than 1:10 but not steeper than 1:8	3 inches
Steeper than 1:12 but not steeper than 1:10	6 inches

For SI: 1 inch = 25.4 mm.

3409*A*.8.6 Performance areas. Where it is technically infeasible to alter performance areas to be on an accessible route, at least one of each type of performance area shall be made accessible.

3409*A*.8.7 Dwelling or sleeping units. Where I-1, I-2 , I-3, R-1, R-2 or R-4 dwelling or sleeping units are being altered or added, the requirements of Section 1107 for Accessible or Type A units and Section 907 for accessible alarms apply only to the quantity of spaces being altered or added.

3409*A*.8.8 Jury boxes and witness stands. In alterations, accessible wheelchair spaces are not required to be located within the defined area of raised jury boxes or witness stands and shall be permitted to be located outside these spaces where the ramp or lift access restricts or projects into the means of egress.

3409*A*.8.9 Toilet rooms. Where it is technically infeasible to alter existing toilet and bathing facilities to be accessible, an accessible unisex toilet or bathing facility is permitted. The unisex facility shall be located on the same floor and in the same area as the existing facilities.

3409*A*.8.10 Dressing, fitting and locker rooms. Where it is technically infeasible to provide accessible dressing, fitting or locker rooms at the same location as similar types of rooms, one accessible room on the same level shall be provided. Where separate-sex facilities are provided, accessible rooms for each sex shall be provided. Separate-sex facilities are not required where only unisex rooms are provided.

3409*A*.8.11 Check-out aisles. Where check-out aisles are altered, at least one of each check-out aisle serving each function shall be made accessible until the number of accessible check-out aisles complies with Section 1109.12.2.

3409*A*.8.12 Thresholds. The maximum height of thresholds at doorways shall be $^{3}/_{4}$ inch (19.1 mm). Such thresholds shall have beveled edges on each side.

3409*A*.9 Historic buildings. These provisions shall apply to buildings and facilities designated as historic structures that undergo alterations or a change of occupancy, unless technically infeasible. Where compliance with the requirements for accessible routes, ramps, entrances or toilet facilities would threaten or destroy the historic significance of the building or facility, as determined by the authority having jurisdiction, the alternative requirements of Sections 3409A.9.1 through 3409A.9.4 for that element shall be permitted.

3409*A*.9.1 Site arrival points. At least one accessible route from a site arrival point to an accessible entrance shall be provided.

3409*A*.9.2 Multilevel buildings and facilities. An accessible route from an accessible entrance to public spaces on the level of the accessible entrance shall be provided.

3409*A*.9.3 Entrances. At least one main entrance shall be accessible.

Exceptions:
1. If a main entrance cannot be made accessible, an accessible nonpublic entrance that is unlocked while the building is occupied shall be provided; or
2. If a main entrance cannot be made accessible, a locked accessible entrance with a notification system or remote monitoring shall be provided.

Signs complying with Section 1110 shall be provided at the primary entrance and the accessible entrance.

3409*A*.9.4 Toilet and bathing facilities. Where toilet rooms are provided, at least one accessible toilet room complying with Section 1109.2.1 shall be provided.

SECTION 3410*A* COMPLIANCE ALTERNATIVES [EB]

3410*A*.1 Compliance. The provisions of this section are intended to maintain or increase the current degree of public safety, health and general welfare in existing buildings while permitting repair, alteration, addition and change of occupancy without requiring full compliance with Chapters 2 through 33, or Sections 3401A.3, and 3403A through 3407A, except where compliance with other provisions of this code is specifically required in this section.

3410*A*.2 Applicability. Structures existing prior to *January 1, 2008* ~~*[DATE TO BE INSERTED BY THE JURISDICTION.*~~

~~*NOTE: IT IS RECOMMENDED THAT THIS DATE COINCIDE WITH THE EFFECTIVE DATE OF BUILDING CODES WITHIN THE JURISDICTION],*~~ in which there is work involving additions, alterations or changes of occupancy shall be made to conform to the requirements of this section or the provisions of Sections 3403A through 3407A. The provisions in Sections 3410A.2.1 through 3410A.2.5 shall apply to existing occupancies that will continue to be, or are proposed to be, in Groups A, B, E, F, M, R, S and U. These provisions shall not apply to buildings with occupancies in Group H or I.

3410*A*.2.1 Change in occupancy. Where an existing building is changed to a new occupancy classification and this section is applicable, the provisions of this section for the new occupancy shall be used to determine compliance with this code.

3410*A*.2.2 Partial change in occupancy. Where a portion of the building is changed to a new occupancy classification, and that portion is separated from the remainder of the building with fire barriers or horizontal assemblies having a fire-resistance rating as required by Table 508.3.3 for the separate occupancies, or with approved compliance alternatives, the portion changed shall be made to conform to the provisions of this section.

Where a portion of the building is changed to a new occupancy classification, and that portion is not separated from the remainder of the building with fire barriers or horizontal assemblies having a fire-resistance rating as required by Table 508.3.3 for the separate occupancies, or with approved compliance alternatives, the provisions of this section which apply to each occupancy shall apply to the entire building. Where there are conflicting provisions, those requirements which secure the greater public safety shall apply to the entire building or structure.

3410*A*.2.3 Additions. Additions to existing buildings shall comply with the requirements of this code for new construction. The combined height and area of the existing building and the new addition shall not exceed the height and area allowed by Chapter 5. Where a fire wall that complies with Section 705 is provided between the addition and the existing building, the addition shall be considered a separate building.

3410*A*.2.4 Alterations and repairs. *Not permitted by OSHPD.* ~~*An existing building or portion thereof, which does not comply with the requirements of this code for new construction, shall not be altered or repaired in such a manner that results in the building being less safe or sanitary than such building is currently. If, in the alteration or repair, the current level of safety or sanitation is to be reduced, the portion altered or repaired shall conform to the requirements of Chapters 2 through 12 and Chapters 14 through 33.*~~

3410*A*.2.4.1 Flood hazard areas. For existing buildings located in flood hazard areas established in Section 1612A.3, if the alterations and repairs constitute substantial improvement of the existing building, the existing building shall be brought into compliance with the requirements for new construction for flood design.

3410*A*.2.5 Accessibility requirements. All portions of the buildings proposed for change of occupancy shall conform to the accessibility provisions of Chapter 11.

3410*A*.3 Acceptance. For repairs, alterations, additions and changes of occupancy to existing buildings that are evaluated in accordance with this section, compliance with this section shall be accepted by the building official.

3410*A*.3.1 Hazards. Where the building official determines that an unsafe condition exists, as provided for in Section 115, such unsafe condition shall be abated in accordance with Section 115.

3410*A*.3.2 Compliance with other codes. Buildings that are evaluated in accordance with this section shall comply with the *California* ~~*International*~~ *Fire Code*. ~~*and International Property Maintenance Code.*~~

3410*A*.4 Investigation and evaluation. For proposed work covered by this section, the building owner shall cause the existing building to be investigated and evaluated in accordance with the provisions of this section.

3410*A*.4.1 Structural analysis. The owner shall have a structural analysis of the existing building made to determine adequacy of structural systems for the proposed alteration, addition or change of occupancy. The existing building shall be capable of supporting the minimum load requirements of Chapter 16A.
3410*A*.4.2 Submittal. The results of the investigation and evaluation as required in Section 3410A.4, along with proposed compliance alternatives, shall be submitted to the building official.

3410*A*.4.3 Determination of compliance. The building official shall determine whether the existing building, with the proposed addition, alteration or change of occupancy, complies with the provisions of this section in accordance with the evaluation process in Sections 3410A.5 through 3410A.9.

3410*A*.5 Evaluation. The evaluation shall be comprised of three categories: fire safety, means of egress and general safety, as defined in Sections 3410A.5.1 through 3410A.5.3.

3410A.5.1 Fire safety. Included within the fire safety category are the structural fire resistance, automatic fire detection, fire alarm and fire suppression system features of the facility.
3410A.5.2 Means of egress. Included within the means of egress category are the configuration, characteristics and support features for means of egress in the facility.
3410A.5.3 General safety. Included within the general safety category are the fire safety parameters and the means of egress parameters.

3410A.6 Evaluation process. The evaluation process specified herein shall be followed in its entirety to evaluate existing buildings. Table 3410.7 shall be utilized for tabulating the results of the evaluation. References to other sections of this code indicate that compliance with those sections is required in order to gain credit in the evaluation herein outlined. In applying this section to a building with mixed occupancies, where the separation between the mixed occupancies does not qualify for any category indicated in Section 3410A.6.16, the score for each occupancy shall be determined and the lower score determined for each section of the evaluation process shall apply to the entire building.

Where the separation between the mixed occupancies qualifies for any category indicated in Section 3410A.6.16, the score for each occupancy shall apply to each portion of the building based on the occupancy of the space.

3410A.6.1 Building height. The value for building height shall be the lesser value determined by the formula in Section 3410A.6.1.1. Chapter 5 shall be used to determine the allowable height of the building, including allowable increases due to automatic sprinklers as provided for in Section 504.2. Subtract the actual building height from the allowable and divide by 12 $^{1}/_{2}$feet. Enter the height value and its sign (positive or negative) in Table 3410A.7 under Safety Parameter 3410A.6.1, Building Height, for fire safety, means of egress and general safety. The maximum score for a building shall be 10.
3410A.6.1.1 Height formula. The following formulas shall be used in computing the building height value.

$$\text{Height value, feet} = \frac{(AH) - (EBH)}{12.5} \times CF$$

$$\text{Height value, stories} = (AS - EBS) \times CF$$

(Equation 34A-1)

where:

AH = Allowable height in feet from Table 503.

EBH = Existing building height in feet.

AS = Allowable height in stories from Table 503.

EBS = Existing building height in stories.

CF = 1 if (*AH*) - (*EBH*) is positive.

CF = Construction-type factor shown in Table 3410A.6.6(2) if (*AH*) - (*EBH*) is negative.

Note: Where mixed occupancies are separated and individually evaluated as indicated in Section 3410A.6, the values AH, AS, EBH and EBS shall be based on the height of the fire area of the occupancy being evaluated.

3410A.6.2 Building area. The value for building area shall be determined by the formula in Section 3410A.6.2.2. Section 503 and the formula in Section 3410A.6.2.1 shall be used to determine the allowable area of the building. This shall include any allowable increases due to open perimeter and automatic sprinklers as provided for in Section 506. Subtract the actual building area from the allowable area and divide by 1,200 square feet (112 m2). Enter the area value and its sign (positive or negative) in Table 3410A.7 under Safety Parameter 3410A.6.2, Building Area, for fire safety, means of egress and general safety. In

determining the area value, the maximum permitted positive value for area is 50 percent of the fire safety score as listed in Table 3410A.8, Mandatory Safety Scores.

3410A.6.2.1 Allowable area formula. The following formula shall be used in computing allowable area:

$$AA = \frac{(SP + OP + 100) \times (\text{area, Table 503})}{100}$$

(Equation 34A-2)

where:

AA = Allowable area.

SP = Percent increase for sprinklers (Section 506.3).

OP = Percent increase for open perimeter (Section 506.2).

3410A.6.2.2 Area formula. The following formula shall be used in computing the area value. Determine the area value for each occupancy fire area on a floor-by-floor basis. For each occupancy, choose the minimum area value of the set of values obtained for the particular occupancy.

$$\text{Area value } i = \frac{\text{Allowable area}_i}{\text{1,200 square feet}} \left[1 - \left(\frac{\text{Actual area}_i}{\text{Allowable area}_i} + \ldots + \frac{\text{Actual area}_n}{\text{Allowable area}_n} \right) \right]$$

(Equation 34A-3)

where:

i = Value for an individual separated occupancy on a floor.

n = Number of separated occupancies on a floor.

3410A.6.3 Compartmentation. Evaluate the compartments created by fire barriers or horizontal assemblies which comply with Sections 3410A.6.3.1 and 3410A.6.3.2 and which are exclusive of the wall elements considered under Sections 3410A.6.4 and 3410A.6.5. Conforming compartments shall be figured as the net area and do not include shafts, chases, stairways, walls or columns. Using Table 3410A.6.3, determine the appropriate compartmentation value (*CV*) and enter that value into Table 3410A.7 under Safety Parameter 3410A.6.3, Compartmentation, for fire safety, means of egress and general safety.

TABLE 3410A.6.3 COMPARTMENTATION VALUES

OCCUPANCY	CATEGORIES[a]				
	a Compartment size equal to or greater than 15,000 square feet	**b** Compartment size of 10,000 square feet	**c** Compartment size of 7,500 square feet	**d** Compartment size of 5,000 square feet	**e** Compartment size of 2,500 square feet
A-1, A-3	0	6	10	14	18
A-2	0	4	10	14	18
A-4, B, E, S-2	0	5	10	15	20
F, M, R, S-1	0	4	10	16	22

For SI: 1 square foot = 0.093 m^2.

a. For areas between categories, the compartmentation value shall be obtained by linear interpolation.

3410A.6.3.1 Wall construction. A wall used to create separate compartments shall be a fire barrier conforming to Section 706 with a fire-resistance rating of not less than 2 hours. Where the building is not divided into more than one compartment, the compartment size shall be taken as the total floor area on all floors. Where there is more than one compartment within a story, each compartmented area on such story shall be provided with a horizontal exit conforming to Section 1022. The fire door serving as the horizontal exit between compartments shall be so installed, fitted and gasketed that such fire door will provide a substantial barrier to the passage of smoke.

3410A.6.3.2 Floor/ceiling construction. A floor/ceiling assembly used to create compartments shall conform to Section 711 and shall have a fire-resistance rating of not less than 2 hours.

3410A.6.4 Tenant and dwelling unit separations. Evaluate the fire-resistance rating of floors and walls separating tenants, including dwelling units, and not evaluated under Sections 3410A.6.3 and 3410A.6.5. Under the categories and occupancies in Table 3410A.6.4, determine the appropriate value and enter that value in Table 3410A.7 under Safety Parameter 3410A.6.4, Tenant and Dwelling Unit Separation, for fire safety, means of egress and general safety.

TABLE 3410A.6.4 SEPARATION VALUES

OCCUPANCY	CATEGORIES				
	a	b	c	d	e
A-1	0	0	0	0	1
A-2	-5	-3	0	1	3
R	-4	-2	0	2	4
A-3, A-4, B, E, F, M, S-1	-4	-3	0	2	4
S-2	-5	-2	0	2	4

3410A.6.4.1 Categories. The categories for tenant and dwelling unit separations are:
1. Category a — No fire partitions; incomplete fire partitions; no doors; doors not self-closing or automatic closing.
2. Category b — Fire partitions or floor assembly less than 1-hour fire-resistance rating or not constructed in accordance with Sections 708 or 711, respectively.
3. Category c — Fire partitions with 1 hour or greater fire-resistance rating constructed in accordance with Section 708 and floor assemblies with 1-hour but less than 2-hour fire-resistance rating constructed in accordance with Section 711, or with only one tenant within the fire area.
4. Category d — Fire barriers with 1-hour but less than 2-hour fire-resistance rating constructed in accordance with Section 706 and floor assemblies with 2-hour or greater fire-resistance rating constructed in accordance with Section 711.
5. Category e — Fire barriers and floor assemblies with 2-hour or greater fire-resistance rating and constructed in accordance with Sections 706 and 711, respectively.

3410A.6.5 Corridor walls. Evaluate the fire-resistance rating and degree of completeness of walls which create corridors serving the floor, and constructed in accordance with Section 1017. This evaluation shall not include the wall elements considered under Sections 3410A.6.3 and 3410A.6.4. Under the categories and groups in Table 3410A.6.5, determine the appropriate value and enter that value into Table 3410A.7 under Safety Parameter 3410A.6.5, Corridor Walls, for fire safety, means of egress and general safety.

TABLE 3410A.6.5 CORRIDOR WALL VALUES

OCCUPANCY	CATEGORIES			
	a	b	c[a]	d[a]
A-1	-10	-4	0	2
A-2	-30	-12	0	2

A-3, F, M, R, S-1	-7	-3	0	2
A-4, B, E, S-2	-5	-2	0	5

a. Corridors not providing at least one-half the travel distance for all occupants on a floor shall use Category b.

3410*A*.6.5.1 Categories. The categories for corridor walls are:
1. Category a — No fire partitions; incomplete fire partitions; no doors; or doors not self-closing.
2. Category b — Less than 1-hour fire-resistance rating or not constructed in accordance with Section 708.4.
3. Category c — 1-hour to less than 2-hour fire-resistance rating, with doors conforming to Section 715 or without corridors as permitted by Section 1017.
4. Category d — 2-hour or greater fire-resistance rating, with doors conforming to Section 715.

3410*A*.6.6 Vertical openings. Evaluate the fire-resistance rating of exit enclosures, hoistways, escalator openings and other shaft enclosures within the building, and openings between two or more floors. Table 3410*A*.6.6(1) contains the appropriate protection values. Multiply that value by the construction-type factor found in Table 3410*A*.6.6(2). Enter the vertical opening value and its sign (positive or negative) in Table 3410*A*.7 under Safety Parameter 3410.6.6, Vertical Openings, for fire safety, means of egress and general safety. If the structure is a one-story building, enter a value of 2. Unenclosed vertical openings that conform to the requirements of Section 707 shall not be considered in the evaluation of vertical openings.

TABLE 3410*A*.6.6(1) VERTICAL OPENING PROTECTION VALUE

PROTECTION	VALUE
None (unprotected opening)	-2 times number floors connected
Less than 1 hour	-1 times number floors connected
1 to less than 2 hours	1
2 hours or more	2

TABLE 3410*A*.6.6(2) CONSTRUCTION-TYPE FACTOR

	TYPE OF CONSTRUCTION								
	IA	IB	IIA	IIB	IIIA	IIIB	IV	VA	VB
FACTOR	1.2	1.5	2.2	3.5	2.5	3.5	2.3	3.3	7

3410*A*.6.6.1 Vertical opening formula. The following formula shall be used in computing vertical opening value.

$$VO = PV \times CF$$

(Equation 34*A*-4)

VO = Vertical opening value

PV = Protection value [Table 3410.6.6(1)]

CF = Construction type factor [Table 3410.6.6(2)]

3410*A*.6.7 HVAC systems. Evaluate the ability of the HVAC system to resist the movement of smoke and fire beyond the point of origin. Under the categories in Section 3410A.6.7.1, determine the appropriate value and enter that value into Table 3410*A*.7 under Safety Parameter 3410*A*.6.7, HVAC Systems, for fire safety, means of egress and general safety.

3410A.6.7.1 Categories. The categories for HVAC systems are:
1. Category a — Plenums not in accordance with Section 602 of the California ~~International~~ *Mechanical Code*. -10 points.
2. Category b — Air movement in egress elements not in accordance with Section 1017.4. -5 points.
3. Category c — Both categories a and b are applicable. -15 points.
4. Category d — Compliance of the HVAC system with Section 1017.4 and Section 602 of the California ~~International~~ *Mechanical Code*. 0 points.
5. Category e — Systems serving one story; or a central boiler/chiller system without ductwork connecting two or more stories. 5 points.

3410A.6.8 Automatic fire detection. Evaluate the smoke detection capability based on the location and operation of automatic fire detectors in accordance with Section 907 and the California ~~International~~ *Mechanical Code*. Under the categories and occupancies in Table 3410A.6.8, determine the appropriate value and enter that value into Table 3410A.7 under Safety Parameter 3410A.6.8, Automatic Fire Detection, for fire safety, means of egress and general safety.

TABLE 3410A.6.8 AUTOMATIC FIRE DETECTION VALUES

OCCUPANCY	CATEGORIES				
	a	b	c	d	e
A-1, A-3, F, M, R, S-1	-10	-5	0	2	6
A-2	-25	-5	0	5	9
A-4, B, E, S-2	-4	-2	0	4	8

3410A.6.8.1 Categories. The categories for automatic fire detection are:
1. Category a — None.
2. Category b — Existing smoke detectors in HVAC systems and maintained in accordance with the California ~~International~~ *Fire Code*.
3. Category c — Smoke detectors in HVAC systems. The detectors are installed in accordance with the requirements for new buildings in the California ~~International~~ *Mechanical Code*.
4. Category d — Smoke detectors throughout all floor areas other than individual sleeping units, tenant spaces and dwelling units.
5. Category e — Smoke detectors installed throughout the fire area.

3410A.6.9 Fire alarm systems. Evaluate the capability of the fire alarm system in accordance with Section 907. Under the categories and occupancies in Table 3410A.6.9, determine the appropriate value and enter that value into Table 3410A.7 under Safety Parameter 3410A.6.9, Fire Alarm, for fire safety, means of egress and general safety.

TABLE 3410A.6.9 FIRE ALARM SYSTEM VALUES

OCCUPANCY	CATEGORIES			
	a	b[a]	c	d
A-1, A-2, A-3, A-4, B, E, R	-10	-5	0	5
F, M, S	0	5	10	15

a. For buildings equipped throughout with an automatic sprinkler system, add 2 points for activation by a sprinkler water flow device.

3410A.6.9.1 Categories. The categories for fire alarm systems are:
1. Category a — None.

2. Category b — Fire alarm system with manual fire alarm boxes in accordance with Section 907.3 and alarm notification appliances in accordance with Section 907.9.
3. Category c — Fire alarm system in accordance with Section 907.
4. Category d — Category c plus a required emergency voice/alarm communications system and a fire command center that conforms to Section 403.8 and contains the emergency voice/alarm communications system controls, fire department communication system controls and any other controls specified in Section 911 where those systems are provided.

3410A.6.10 Smoke control. Evaluate the ability of a natural or mechanical venting, exhaust or pressurization system to control the movement of smoke from a fire. Under the categories and occupancies in Table 3410A.6.10, determine the appropriate value and enter that value into Table 3410A.7 under Safety Parameter 3410A.6.10, Smoke Control, for means of egress and general safety.

TABLE 3410A.6.10 SMOKE CONTROL VALUES

OCCUPANCY	CATEGORIES					
	a	b	c	d	e	f
A-1, A-2, A-3	0	1	2	3	6	6
A-4, E	0	0	0	1	3	5
B, M, R	0	2[a]	3[a]	3[a]	3[a]	4[a]
F, S	0	2[a]	2[a]	3[a]	3[a]	3[a]

a. This value shall be 0 if compliance with Category d or e in Section 3410.6.8.1 has not been obtained.

3410A.6.10.1 Categories. The categories for smoke control are:
1. Category a — None.
2. Category b — The building is equipped throughout with an automatic sprinkler system. Openings are provided in exterior walls at the rate of 20 square feet (1.86 m^2) per 50 linear feet (15 240 mm) of exterior wall in each story and distributed around the building perimeter at intervals not exceeding 50 feet (15 240 mm). Such openings shall be readily openable from the inside without a key or separate tool and shall be provided with ready access thereto. In lieu of operable openings, clearly and permanently marked tempered glass panels shall be used.
3. Category c — One enclosed exit stairway, with ready access thereto, from each occupied floor of the building. The stairway has operable exterior windows and the building has openings in accordance with Category b.
4. Category d — One smokeproof enclosure and the building has openings in accordance with Category b.
5. Category e — The building is equipped throughout with an automatic sprinkler system. Each fire area is provided with a mechanical air-handling system designed to accomplish smoke containment. Return and exhaust air shall be moved directly to the outside without recirculation to other fire areas of the building under fire conditions. The system shall exhaust not less than six air changes per hour from the fire area. Supply air by mechanical means to the fire area is not required. Containment of smoke shall be considered as confining smoke to the fire area involved without migration to other fire areas. Any other tested and approved design which will adequately accomplish smoke containment is permitted.
6. Category f — Each stairway shall be one of the following: a smokeproof enclosure in accordance with Section 1020.1.7; pressurized in accordance with Section 909.20.5; or shall have operable exterior windows.

3410A.6.11 Means of egress capacity and number. Evaluate the means of egress capacity and the number of exits available to the building occupants. In applying this section, the means of egress are required to conform to Sections 1003 through 1015 and 1017 through 1024 (except that the minimum width required by this section shall be determined solely by the width for the required capacity in accordance with Table 1005.1). The number of exits credited is the number that are available to each occupant of the area being evaluated. Existing fire escapes shall be accepted as a component in the means of egress when conforming to Section 3404A. Under the categories and occupancies in Table 3410A.6.11, determine the appropriate value and enter that value into Table 3410A.7 under Safety Parameter 3410A.6.11, Means of Egress Capacity, for means of egress and general safety.

TABLE 3410A.6.11 MEANS OF EGRESS VALUES

OCCUPANCY	CATEGORIES				
	a[a]	b	c	d	e
A-1, A-2, A-3, A-4, E	-10	0	2	8	10
M	-3	0	1	2	4
B, F, S	-1	0	0	0	0
R	-3	0	0	0	0

a. The values indicated are for buildings six stories or less in height. For buildings over six stories in height, add an additional -10 points.

3410*A*.6.11.1 Categories. The categories for means of egress capacity and number of exits are:

1. Category a — Compliance with the minimum required means of egress capacity or number of exits is achieved through the use of a fire escape in accordance with Section 3404A.
2. Category b — Capacity of the means of egress complies with Section 1004 and the number of exits complies with the minimum number required by Section 1019.
3. Category c — Capacity of the means of egress is equal to or exceeds 125 percent of the required means of egress capacity, the means of egress complies with the minimum required width dimensions specified in the code and the number of exits complies with the minimum number required by Section 1019.
4. Category d — The number of exits provided exceeds the number of exits required by Section 1019. Exits shall be located a distance apart from each other equal to not less than that specified in Section 1015.2.
5. Category e — The area being evaluated meets both Categories c and d.

3410*A*.6.12 Dead ends. In spaces required to be served by more than one means of egress, evaluate the length of the exit access travel path in which the building occupants are confined to a single path of travel. Under the categories and occupancies in Table 3410*A*.6.12, determine the appropriate value and enter that value into Table 3410*A*.7 under Safety Parameter 3410*A*.6.12, Dead Ends, for means of egress and general safety.

TABLE 3410*A*.6.12 DEAD-END VALUES

OCCUPANCY	CATEGORIES[a]		
	a	b	c
A-1, A-3, A-4, B, E, F, M, R, S	-2	0	2
A-2, E	-2	0	2

a. For dead-end distances between categories, the dead-end value shall be obtained by linear interpolation.

3410*A*.6.12.1 Categories. The categories for dead ends are:

1. Category a — Dead end of 35 feet (10 670 mm) in nonsprinklered buildings or 70 feet (21 340 mm) in sprinklered buildings.
2. Category b — Dead end of 20 feet (6096 mm); or 50 feet (15 240 mm) in Group B in accordance with Section 1017.3 exception 2.
3. Category c — No dead ends; or ratio of length to width (l/w) is less than 2.5:1.

3410*A*.6.13 Maximum exit access travel distance. Evaluate the length of exit access travel to an approved exit. Determine the appropriate points in accordance with the following equation and enter that value into Table 3410*A*.7 under Safety Parameter 3410*A*.6.13, Maximum Exit Access Travel Distance, for means of egress and general safety. The maximum allowable exit access travel distance shall be determined in accordance with Section 1015.1.

$$\text{Points} = 20 \times \frac{\text{Maximum allowable travel distance} - \text{Maximum actual travel distance}}{\text{Max. allowable travel distance}}$$

3410A.6.14 Elevator control. Evaluate the passenger elevator equipment and controls that are available to the fire department to reach all occupied floors. Elevator recall controls shall be provided in accordance with the California ~~International~~ *Fire Code*. Under the categories and occupancies in Table 3410A.6.14, determine the appropriate value and enter that value into Table 3410A.7 under Safety Parameter 3410A.6.14, Elevator Control, for fire safety, means of egress and general safety. The values shall be zero for a single-story building.

TABLE 3410A.6.14 ELEVATOR CONTROL VALUES

ELEVATOR TRAVEL	CATEGORIES			
	a	b	c	d
Less than 25 feet of travel above or below the primary level of elevator access for emergency fire-fighting or rescue personnel	-2	0	0	+2
Travel of 25 feet or more above or below the primary level of elevator access for emergency fire-fighting or rescue personnel	-4	NP	0	+4

For SI: 1 foot = 304.8 mm.

3410A.6.14.1 Categories. The categories for elevator controls are:

1. Category a — No elevator.
2. Category b — Any elevator without Phase I and II recall.
3. Category c — All elevators with Phase I and II recall as required by the California ~~International~~ *Fire Code*.
4. Category d — All meet Category c; or Category b where permitted to be without recall; and at least one elevator that complies with new construction requirements serves all occupied floors.

3410A.6.15 Means of egress emergency lighting. Evaluate the presence of and reliability of means of egress emergency lighting. Under the categories and occupancies in Table 3410A.6.15, determine the appropriate value and enter that value into Table 3410A.7 under Safety Parameter 3410A.6.15, Means of Egress Emergency Lighting, for means of egress and general safety.

TABLE 3410A.6.15 MEANS OF EGRESS EMERGENCY LIGHTING VALUES

NUMBER OF EXITS REQUIRED BY SECTION 1010	CATEGORIES		
	a	b	c
Two or more exits	NP	0	4
Minimum of one exit	0	1	1

3410A.6.15.1 Categories. The categories for means of egress emergency lighting are:

1. Category a — Means of egress lighting and exit signs not provided with emergency power in accordance with Section 2702.
2. Category b — Means of egress lighting and exit signs provided with emergency power in accordance with Section 2702.
3. Category c — Emergency power provided to means of egress lighting and exit signs which provides protection in the event of power failure to the site or building.

3410*A*.6.16 Mixed occupancies. Where a building has two or more occupancies that are not in the same occupancy classification, the separation between the mixed occupancies shall be evaluated in accordance with this section. Where there is no separation between the mixed occupancies or the separation between mixed occupancies does not qualify for any of the categories indicated in Section 3410A.6.16.1, the building shall be evaluated as indicated in Section 3410A.6 and the value for mixed occupancies shall be zero. Under the categories and occupancies in Table 3410*A*.6.16, determine the appropriate value and enter that value into Table 3410*A*.7 under Safety Parameter 3410*A*.6.16, Mixed Occupancies, for fire safety and general safety. For buildings without mixed occupancies, the value shall be zero.

TABLE 3410*A*.6.16 MIXED OCCUPANCY VALUES[a]

OCCUPANCY	CATEGORIES		
	a	b	c
A-1, A-2, R	-10	0	10
A-3, A-4, B, E, F, M, S	-5	0	5

a. For fire-resistance ratings between categories, the value shall be obtained by linear interpolation.

3410*A*.6.16.1 Categories. The categories for mixed occupancies are:
1. Category a — Minimum 1-hour fire barriers between occupancies.
2. Category b — Fire barriers between occupancies in accordance with Section 508.3.3
3. Category c — Fire barriers between occupancies having a fire-resistance rating of not less than twice that required by Section 508.3.3

3410*A*.6.17 Automatic sprinklers. Evaluate the ability to suppress a fire based on the installation of an automatic sprinkler system in accordance with Section 903.3.1.1. "Required sprinklers" shall be based on the requirements of this code. Under the categories and occupancies in Table 3410*A*.6.17, determine the appropriate value and enter that value into Table 3410*A*.7 under Safety Parameter 3410*A*.6.17, Automatic Sprinklers, for fire safety, means of egress divided by 2 and general safety.

TABLE 3410*A*.6.17 SPRINKLER SYSTEM VALUES

OCCUPANCY	CATEGORIES					
	a	b	c	d	e	f
A-1, A-3, F, M, R, S-1	-6	-3	0	2	4	6
A-2	-4	-2	0	1	2	4
A-4, B, E, S-2	-12	-6	0	3	6	12

3410*A*.6.17.1 Categories. The categories for automatic sprinkler system protection are:
1. Category a — Sprinklers are required throughout; sprinkler protection is not provided or the sprinkler system design is not adequate for the hazard protected in accordance with Section 903.

2. Category b — Sprinklers are required in a portion of the building; sprinkler protection is not provided or the sprinkler system design is not adequate for the hazard protected in accordance with Section 903.
3. Category c — Sprinklers are not required; none are provided.
4. Category d — Sprinklers are required in a portion of the building; sprinklers are provided in such portion; the system is one which complied with the code at the time of installation and is maintained and supervised in accordance with Section 903.
5. Category e — Sprinklers are required throughout; sprinklers are provided throughout in accordance with Chapter 9.
6. Category f — Sprinklers are not required throughout; sprinklers are provided throughout in accordance with Chapter 9.

3410*A*.6.18 Incidental use. Evaluate the protection of incidental use areas in accordance with Section 508.2. Do not include those where this code requires suppression throughout the building including covered mall buildings, high-rise buildings, public garages and unlimited area buildings. Assign the lowest score from Table 3410*A*.6.18 for the building or fire area being evaluated. If there are no specific occupancy areas in the building or fire area being evaluated, the value shall be zero.

TABLE 3410*A*.6.18 INCIDENTAL USE AREA VALUES[a]

PROTECTION REQUIRED BY TABLE 302.1.1	PROTECTION PROVIDED						
	None	1 Hour	AFSS	AFSS with SP	1 Hour and AFSS	2 Hours	2 Hours and AFSS
2 Hours and AFSS	-4	-3	-2	-2	-1	-2	0
2 Hours, or 1 Hour and AFSS	-3	-2	-1	-1	0	0	0
1 Hour and AFSS	-3	-2	-1	-1	0	-1	0
1 Hour	-1	0	-1	0	0	0	0
1 Hour, or AFSS with SP	-1	0	-1	0	0	0	0
AFSS with SP	-1	-1	-1	0	0	-1	0
1 Hour or AFSS	-1	0	0	0	0	0	0

a. AFSS = Automatic fire suppression system; SP = Smoke partitions (See Section 508.2.2).

NOTE: For Table 3410.7, see next page.

3410*A*.7 Building score. After determining the appropriate data from Section 3410A.6, enter those data in Table 3410*A*.7 and total the building score.

TABLE 3410*A*.7 SUMMARY SHEET — BUILDING CODE

Existing occupancy_____	Proposed occupancy _____
Year building was constructed _____	Number of stories_____ Height in feet _____
Type of construction _____	Area per floor _____
Percentage of open perimeter _____%	Percentage of height reduction _____%
Completely suppressed: Yes____ No____	Corridor wall rating _____
Compartmentation: Yes____ No____	Required door closers: Yes____ No____

Fire-resistance rating of vertical opening enclosures _____

Type of HVAC system _____, serving number of floors _____

Automatic fire detection: Yes____ No____, type and location _____

Fire alarm system: Yes____ No____, type _____

Smoke control: Yes____ No____, type _____

Adequate exit routes: Yes____ No____, Dead ends: Yes____ No____

Maximum exit access travel distance _____ Elevator controls: Yes____ No____

Means of egress emergency lighting: Yes____ No____ Mixed occupancies: Yes____ No____

SAFETY PARAMETERS	FIRE SAFETY (FS)	MEANS OF EGRESS (ME)	GENERAL SAFETY (GS)
3410.6.1 Building Height 3410.6.2 Building Area 3410.6.3 Compartmentation			
3410.6.4 Tenant and Dwelling Unit Separations 3410.6.5 Corridor Walls 3410.6.6 Vertical Openings			
3410.6.7 HVAC Systems 3410.6.8 Automatic Fire Detection 3410.6.9 Fire Alarm System			
3410.6.10 Smoke control 3410.6.11 Means of Egress 3410.6.12 Dead ends	* * * * * * * * * * * *		
3410.6.13 Maximum Exit Access Travel Distance 3410.6.14 Elevator Control 3410.6.15 Means of Egress Emergency Lighting	* * * * * * * *		
3410.6.16 Mixed Occupancies 3410.6.17 Automatic Sprinklers 3410.6.18 Incidental Use		* * * * □2 =	
Building score — total value			

* * * *No applicable value to be inserted.

3410*A*.8 Safety scores. The values in Table 3410*A*.8 are the required mandatory safety scores for the evaluation process listed in Section 3410A.6.

TABLE 3410*A*.8 MANDATORY SAFETY SCORES[a]

OCCUPANCY	FIRE SAFETY (MFS)	MEANS OF EGRESS (MME)	GENERAL SAFETY (MGS)
A-1	16	27	27
A-2	19	30	30

A-3	18	29	29
A-4, E	23	34	34
B	24	34	34
F	20	30	30
M	19	36	36
R	17	34	34
S-1	15	25	25
S-2	23	33	33

a. MFS = Mandatory Fire Safety;

MME = Mandatory Means of Egress;

MGS = Mandatory General Safety.

3410*A*.9 Evaluation of building safety. The mandatory safety score in Table 3410*A*.8 shall be subtracted from the building score in Table 3410*A*.7 for each category. Where the final score for any category equals zero or more, the building is in compliance with the requirements of this section for that category. Where the final score for any category is less than zero, the building is not in compliance with the requirements of this section.

TABLE 3410*A*.9 EVALUATION FORMULAS[a]

FORMULA	T.3410.7			T.3410.8	SCORE	PASS	FAIL
FS-MFS ≥ 0	_____	(FS)	~	_____ (MFS) =	_____	_____	_____
ME-MME ≥ 0	_____	(ME)	~	_____ (MME) =	_____	_____	_____
GS-MGS ≥ 0	_____	(GS)	~	_____ (MGS) =	_____	_____	_____

a. FS = Fire Safety MFS = Mandatory Fire Safety

ME = Means of Egress MME = Mandatory Means of Egress

GS = General Safety MGS = Mandatory General Safety

3410*A*.9.1 Mixed occupancies. For mixed occupancies, the following provisions shall apply:

1. Where the separation between mixed occupancies does not qualify for any category indicated in Section 3410A.6.16, the mandatory safety scores for the occupancy with the lowest general safety score in Table 3410*A*.8 shall be utilized (see Section 3410A.6.)
2. Where the separation between mixed occupancies qualifies for any category indicated in Section 3410A.6.16, the mandatory safety scores for each occupancy shall be placed against the evaluation scores for the appropriate occupancy.

(Relocated from 1638A, 2001CBC) ***SECTION 3411A ~~1638A [FOR OSHPD 1 & 4]~~ - ADDITIONS, ALTERATIONS, REPAIRS AND SEISMIC RETROFIT TO EXISTING BUILDINGS OR STRUCTURES***

Existing hospital buildings (as defined in Section 7-111 Part 1, Title 24, Building Standards Administrative Code).

NOTE: *Alterations to lateral shear force-resisting capacity and story lateral shear forces shall be considered to be cumulative for purposes of defining incidental or minor alterations or additions. The percentage of cumulative changes shall be based on as built conditions existing on March 7, 1973 or since the original construction if built after March 7, 1973.*

***3411A.1* Alterations.** *For this section, alterations include any additions, alterations, repairs, and / or seismic retrofit to a hospital building or portions thereof. The provision of Section 3403A ~~Additions, Alterations or Repairs. of Chapter 34 of the California Building Code~~ shall apply for Hospital Buildings.*

***3411A.2* Seismic Retrofit.** *Any seismic retrofit of hospital building required by Article 2 and Article 11, Chapter 6, Part 1, Title 24, shall meet the requirements of Sections ~~1640A through 1649A~~ 3403A, 3412A through 3414A.*

> ***EXCEPTION:*** *Hospital buildings evaluated to SPC 1 due to deficiencies identified by Article 10, Chapter 6, Part 1, Title 24, may be upgraded to SPC 2 by altering, repairing or seismically retrofitting these conditions in accordance with the requirements of Sections ~~1640A through 1649A~~ 3403A, 3412A through 3414A.*

***3411A.3* Alterations, additions and repairs to existing buildings or structures not required by Chapter 6, Part 1, Title 24.**

***3411A.3.1* Approved existing buildings.** *Structural alterations or repairs may be made to approved building provided the entire building, as modified, including structural alterations or repairs, conform to Sections ~~1640A through 1649A~~ 3403A, 3412A through 3414A requirements for the seismic structural performance category (SPC) of the building as determined by Chapter 6, Part 1, Title 24. Additions shall conform to the requirements of these regulations for new construction.*

***3411A.3.2* Pre-1973 buildings.**

***3411A.3.2.1* Incidental structural alterations, additions or repairs.** *The existing structural elements affected by the alteration, addition or repair shall conform or shall be made to conform to the vertical load requirements of these regulations. Incidental structural additions will be permitted provided the additions meet these regulations for new construction using importance factor, I, equal to or greater than 1.0. Alterations or repairs to the existing lateral load-resisting system must meet the requirements of Sections ~~1640A through 1649A~~ 3403A, 3412A through 3414A.*

***3411A.3.2.2* Minor structural alteration, additions or repairs.** *Minor structural alterations, additions or repairs shall be permitted provided they meet the following: Alterations to existing gravity and / or lateral load-resisting system shall be made to conform to the requirements Sections ~~1640A through 1649A~~ 3403A, 3412A through 3414A; or additions shall meet all of the requirements of these regulations for new construction using an importance factor, I, equal to or greater than 1.0.*

***3411A.3.2.3* Major structural alteration, additions or repairs.** *Major structural alterations, additions or repairs shall be permitted provided the entire building, as modified, including the structural alterations or repairs, conforms to the requirements of Sections ~~1640A through 1649A~~ 3403A, 3412A through 3414A for no less than SPC 2. Additions shall meet the requirements of these regulations for new construction.*

It shall also be demonstrated by a written report submitted by the structural engineer, acceptable to enforcement agency, that an investigation of the existing building structure shows it to be constructed in a reasonable conformance with the submitted drawings and specifications.

3411A.3.2.3 *An alteration which involves the removal of one or more entire stories will be permitted if the lateral-load-resisting capacity of the remaining structure is not reduced.*

An alteration which involves the removal of other than one or more entire stories will be permitted in accordance with Sections ~~1640A through 1649A~~ 3403A, 3412A through 3414A.

(Relocated from 1640A, 2001CBC) ***SECTION 3412A ~~Division VI-R~~ EARTHQUAKE EVALUATION AND DESIGN FOR RETROFIT OF EXISTING HOSPITAL BUILDINGS***

3412A ~~1640A~~ GENERAL

***3412A.1 ~~1640A.1~~ Purpose.** *All modifications, alterations, and / or repairs to existing structures or portions thereof shall, at a minimum, be designed and constructed to resist the effects of seismic ground motions as provided in this section. When applicable, the structural system shall be evaluated by the design professional of record and, if not meeting or exceeding the minimum seismic design requirements of this section, shall be retrofitted in compliance with these requirements.*

3412A.1.1 ~~***1640A.1.1***~~ ***Minimum seismic design.*** *The purpose of this section is to provide a minimum level of seismic performance. At this essential life safety level (seismic performance category, SPC - 2), in general, persons in and around the building will be able to safely exit or be evacuated from the building or its vicinity following an earthquake. It does not mean that persons will not be injured or not be in need of medical attention. This level of seismic performance is presumed to be achieved when a) the building has some margin against either total or partial collapse of the structural system even though significant damage may have occurred that may not be economical to repair; b) major structural elements have not fallen or been dislodged so as to pose a life-safety threat; and c) nonstructural systems or elements that are heavy enough to cause severe injuries either within or outside the building have not been dislodged so as to pose a life-safety threat. For buildings in seismic performance categories SPC- 3 through SPC – 5, the purpose of this section is to provide the immediate occupancy level of seismic performance. At this level, the building and essential non-structural systems will be reasonably capable of functioning following an earthquake.*

3412A.2 ~~***1640A.2***~~ ***Applicability***

3412A.2.1 ~~***1640A.2.1***~~ *The requirements of this ~~division~~ section apply to hospital building where Chapter 6. Part 1, Title 24 Building Standard Administrative Code, so requires , wherever the structure is to be retrofitted, repaired, or modified and; 1) there is change in occupancy; or 2) changes to structural elements that reduce the lateral load capacity by more than 5% at any story; or 3) repair of structural elements where the damage has reduced the lateral load capacity by more than 10% at any story; or 4) changes in live or dead load that increase the story shear by more than 5%; or 5) where required by Sections ~~1638A~~ 3403A, 3411A or Chapter 6, Part 1, Title 24, Building Standard Administrative Code. Changes in items 2), 3), and 4) are cumulative for past alterations to the building.*

Where items 1 through 5 are not applicable, the alteration, retrofit or repair shall meet the requirements of this section, but upgrade of the whole structure is not required.

3412A.2.2 ~~***1640A.2.2***~~ ***Evaluation required.*** *If the criteria in Section ~~1640.2~~ 3412A.2.1 apply to the project under consideration, the design professional of record shall provide an evaluation in accordance with ~~1640A.2~~ FEMA 356, as modified herein, to determine the seismic performance of the building in its current configuration and condition. If the structure seismic performance is evaluated as satisfactory and ~~the peer reviewer (s), when method B of section 1648A is use~~, enforcement agent concur, then no structural retrofit is required.*

> ***EXCEPTION:*** *In some cases a technical review and evaluation may be waived under the exception of Section ~~1648.1~~ 3413A.1, where the life safety threat posed by building is clearly minimal.*

3412A.2.3 ~~***1640A.2.3***~~ ***Retrofit required.*** *Where the evaluation indicates the building does not meet the SPC performance objective of this section, the owner shall take appropriate steps and either 1) undertake the seismic retrofit as part of the modifications, alterations and / or repairs; or 2) provide a plan, acceptable to the enforcement agent, to complete the seismic retrofit in a timely manner.*

3412A.3 ~~***1640A.3***~~ *The modification to any existing building may be prepared in accordance with the requirements of a new building in this Code. ~~Chapter 16A, Division VI, Part 2, Title 24, California Code of Regulations, 2001 edition.~~*

3412A.4 ~~***1640A.6.1***~~ *The structural system allowances of Sections 3403A.2.1 & 3403A.2.2 ~~Chapter 34~~ do not apply to any building to which Sections 3411A through 3414A ~~Division VI-R~~ apply.*

SECTION 3413A SEISMIC REHABILITATION OF BUILDINGS

3413*A.1* *(Relocated from 1648A.1, 2001CBC)* ***GENERAL.*** *The existing or retrofitted structure shall be demonstrated to have the capability to sustain the deformation response due to the specified earthquake ground motions. The engineer shall provide an evaluation of the response of the existing structure in its current configuration and condition to the ground motions specified. If the building's seismic performance is evaluated as satisfactory and ~~the peer reviewer(s)~~ the enforcement agent concurs, then no further engineering work is required. When the evaluation indicates the building does not meet the objective of safety goals of this chapter ~~division~~ and the applicable structural seismic performance (SPC) and nonstructural seismic performance (NPC) requirements, then a retrofit and / or repair design shall be prepared that yields a structure that meets the life-safety and operational performance objectives of Section ~~1640A~~ 3412A and reflects the appropriate consideration of existing conditions. Any approach to analysis and design may be used that yields a building of reliable stability in the prescribed design earthquake loads and conditions. The approach shall be rational, shall be consistent with the established principals of mechanics, and shall use the known performance characteristics of materials and assemblages under reversing loads typical of severe earthquake ground motions.*

EXCEPTION: *Further consideration of the structure's seismic performance can be waived by the Enforcement Agent if both the engineer-of-record and ~~peer reviewer(s) and / or~~ Enforcement Agent conclude that the structural system can be expected to perform at least as well as required by the provisions of ~~this division~~ Section 3403A, 3412A through 3414A without completing an analysis of the structure's conformance to these requirements. A detailed report shall be submitted to the responsible Enforcement Agent that presents the reasons and basis for this conclusion. This report shall be prepared by the engineer of record. ~~The peer reviewer(s) and / or~~ Enforcement Agent shall concur in this conclusion and affirm to it in writing.*

3413A.2 Modifications to FEMA 356. *This section is applicable to seismic evaluation, analysis and design using the provisions of FEMA 356 per section 3403A.2.3.3. The text of FEMA 356 shall be modified as indicated in sections 3413A.2.1 through 3413A.2.37.*

3413A.2.1 FEMA 356 Sections 1.3, 1.4, 1.5. *Replace FEMA 356 Sections 1.3, 1.4 and 1.5 as follows:*

Seismic Rehabilitation Process and Objective. *Seismic evaluation procedure, building performance level and rehabilitation objectives for Hospital Buildings shall be per California Building Standards Administrative Code (Part 1, Title 24 CCR), Chapter 6.*

3413A.2.2 FEMA 356 Section 1.6 Seismic Hazard. *Replace FEMA 356 Section 1.6 by the Following:*

The ground motion characterization shall be based on ground shaking having a 10 percent probability of exceedance in 50 years for category SPC-2 at the essential life-safety performance level. For SPC-3 through SPC-5, the ground motion characterization shall be based on ground shaking having a 10 percent probability of exceedance in 50 years at the immediate occupancy performance level and the maximum considered earthquake at the collapse prevention performance level.

Ground shaking having a 10 percent probability of exceedance in 50 years need not exceed 2/3 of the maximum considered earthquake.

Response spectra and acceleration time histories shall be constructed in accordance with sections 1613A, 1614A and 1802A.6.

3413A.2.3 FEMA 356 Section 2.2.6. *Modify FEMA 356 Section 2.2.6 by the Following:*

Data Collection Requirements. *The extent of data collection shall be at Usual level for SPC -2 and Comprehensive level for SPC-3 through SPC-5 per FEMA 356 Table 2-1. Materials properties testing program shall be pre-approved by the Enforcement Agent.*

For building, built under an OSHPD permit based on 1976 or later edition of CBC, where materials properties are shown on design drawings and original materials test data are available, no materials testing shall be required when approved by the enforcement agent.

3413A.2.4 FEMA 356 Section 2.4.1.1. *Modify FEMA 356 Section 2.4.1.1 by the Following:*

Method to Determine Limitations on Use of Linear Procedures. *The applicability of linear procedures shall be determined as follows:*

1. *If all component DCRs $\leq$1.5 for SPC-3 through 5 buildings or 2.0 for SPC-2 buildings, then linear procedures are applicable.*
2. *If up to 10% of the component DCRs exceeds 1.5 and no irregularities described in Sections 2.4.1.1.1 through 2.4.1.1.4 are present, then linear procedures are applicable.*
3. *If one or more component DCRs exceed 1.5 and any irregularity described in Section 2.4.1.1.1 through 2.4.1.1.4 are present, then linear procedures are not applicable and shall not be used.*
4. *Linear procedures are not applicable to moment resisting frames where plastic hinges do not form in either the beam at the face of column or in the column panel zone.*

3413A.2.5 FEMA 356 Section 2.4.2.1 *Modify FEMA 356 Section 2.4.2.1 by the Following:*

Nonlinear Static Procedure. *If higher mode effects are significant, either the Nonlinear Dynamic Procedure or Modal Pushover Analysis procedure, subject to the approval of the enforcement agent, shall be used.*

3413*A.2.6 FEMA 356 Section 2.4.4.5.* *Modify FEMA 356 Section 2.4.4.5 by the Following:*

Material Properties. *Expected material properties are not permitted to be determined by multiplying lower bound values by the assumed factors specified in Chapters 5 through 8.*

3413*A.2.7 FEMA 356 Section 3.2.10.1.* *Modify FEMA 356 Section 3.2.10.1 by the Following:*

Linear Procedures. *Equation 3-6 is not permitted by OSHPD.*

3413*A.2.8 FEMA 356 Section 3.3.1.3.1.* *Modify FEMA 356 Section 3.3.1.3.1 by the Following:*

Pseudo Lateral Load.

C_2 = Modification factor to represent the effects of pinched hysteresis shape, stiffness deterioration and strength deterioration on maximum displacement response. Values of C_2 for different framing systems and Structural Performance Levels shall be obtained from Table 3-3. For linear procedures, C_2 may be taken as 1.0 if all DCRs are less than 1.5.

3413*A.2.9 FEMA 356 Section 3.3.1.3.5.* *Replace FEMA 356 Section 3.3.1.3.5 as follows:*

Unreinforced Masonry Buildings. *Unreinforced Masonry not permitted by OSHPD.*

3413*A.2.10 FEMA 356 Section 3.3.3.2.4.* *Modify FEMA 356 Section 3.3.3.2.4 by the Following:*

Idealized Force-Displacement Curve. *The effective yield strength, V_y, and yield displacement of the building shall not be used to determine acceptance criteria based on displacement ductility or strength beyond the provisions without approval of the enforcement agent.*

3413*A.2.11 FEMA 356 Section 3.3.3.3.2.* *Modify FEMA 356 Section 3.3.3.3.2 by the Following:*

Target Displacement.

C_2 = Modification factor to represent the effects of pinched hysteresis shape, stiffness deterioration and strength deterioration on maximum displacement response. Values of C_2 for different framing systems and Structural Performance Levels shall be obtained from Table 3-3.

3413*A.2.12 FEMA 356 Table 3-3.* *Modify FEMA 356 Table 3-3 by the Followings:*

Values for Modification Factor C_2.
Footnote 1. Structures in which more than 30% of the story shear at any level is resisted by any combination of the following components, elements, or frames: ordinary moment resisting frames, concentrically-braced frames, frames with partially restrained connections, tension-only braces, unreinforced masonry walls, shear-critical piers and spandrels of reinforced concrete or masonry, flexurally controlled reinforced concrete and masonry walls without boundary elements and welded steel special moment resisting frames with Pre-Northridge connections.

3413*A.2.13 FEMA 356 Section 3.4.2.2.* *Modify FEMA 356 Section 3.4.2.2 by the Following:*

Acceptance Criteria for Linear Procedures – Drift Limitations. *The interstory drift ratio shall not exceed the following values for the specified systems for the performance level under consideration. For dual systems, the least interstory drift ratio shall control.*

> ***EXCEPTION:*** *Larger interstory drift ratios shall be permitted where justified by rational analysis that both structural and non-structural elements can tolerate such drift and approved by the enforcement agent.*

Seismic Force Resisting System	***IO***	*LS*	*CP*
Moment Frames	*0.015*	*0.020*	*0.025*
Braced Frames	*0.010*	*0.015*	*0.020*
Shear Walls	*0.007*	*0.010*	*0.015*

3413*A.2.14 FEMA 356 Section 3.4.3.2.1.* *Modify FEMA 356 Section 3.4.3.2.1 by the following:*

Deformation-Controlled Actions. *For SPC-3 through SPC-5, primary components shall be within the acceptance criteria for primary components and secondary components shall be within the acceptance criteria for secondary components.*

3413*A.2.15 FEMA 356 Section 4.4.* *Modify FEMA 356 Section 4.4 by the followings:*

Foundation Strength and Stiffness. *Foundation and soil strength shall be used to evaluate potential overturning, uplift and sliding for fixed base assumptions, and stiffness for flexible base assumptions, including deformations associated with those actions.*

3413*A.2.16 FEMA 356 Section 4.4.1.1.* *Replace FEMA 356 Section 4.4.1.1 as follows:*

Presumptive Capacities. *Not permitted by OSHPD*

3413*A.2.17 - FEMA 356 Section 4.4.1.2.* *Replace FEMA 356 Section 4.4.1.2 as follows:*

Presumptive Expected Capacities. *Not permitted by OSHPD.*

3413*A.2.18 - FEMA 356 Section 4.4.3.2.2.* *Modify FEMA 356 Section 4.4.3.2.2 by the following:*

Flexible Base Assumption. *The soil strength shall be evaluated.*

3413*A.2.19 - FEMA 356 Section 4.5.* *Modify FEMA 356 Section 4.5 by the following:*

Seismic Earth Pressure. *Where the grade difference from one side of the building to another exceeds one-half story height, the seismic increment of earth pressure shall be added to the gravity lateral earth pressure to evaluate the building overturning and sliding stability and the lateral force resisting system below grade in combination with the building seismic forces .*

3413*A.2.20 FEMA 356 Table 5-6.* *Modify FEMA 356 Table 5.6 by the following:*

Acceptance Criteria for Nonlinear Procedures - Structural Steel Components.
For fully and partially restrained moment connections, the plastic rotation angles and residual strength ratios used shall be substantiated by the statistical analysis of three or more applicable cyclic test results subject to the approval of the enforcement agent, except when connections satisfy requirements of AISC 358.

3413*A.2.21 FEMA 356 Section 6.8.1.1.* *Modify FEMA 356 Section 6.8.1.1 by the following:*

Monolithic Reinforced Concrete Shear Walls and Wall Segments. *For nonlinear procedures, shear walls or wall segments with axial loads greater than 0.35 P_o shall be included in the model as primary elements with appropriate strength and stiffness degrading properties assigned to those components subject to the approval of the enforcement agent. For linear procedures, the effects of deformation compatibility shall be investigated using moment-curvature section analyses and cyclic testing results of similar components to determine whether strengthening is necessary to maintain the gravity load carrying capacity of that component.*

3413*A.2.22 FEMA 356 Section 6.8.2.3.* *Modify FEMA 356 Section 6.8.2.3 by the following:*

Strength. *The effective tension and compression flange widths for shear walls or wall segments shall be taken as one half of the distance to the next wall web or 25% of the total wall height, whichever is less.*

3413*A.2.23 FEMA 356 Section 7.4.2*. *Replace FEMA 356 Section 7.4.2 as follows:*

Unreinforced Masonry Walls and Piers In-plane. *Not permitted by OSHPD.*

3413*A.2.24 FEMA 356 Section 7.4.3.* *Replace FEMA 356 Section 7.4.3 as follows:*

Unreinforced Masonry Walls Out-of-plane. *Not permitted by OSHPD.*

3413*A.2.25 FEMA 356 7.4.4.2.2. Shear Strength of Walls and Piers.* *Modify FEMA 356 Section 7.4.4.2.2 by the following:*

The spacing of shear reinforcing, S, shall be less than or equal to the wall pier clear height divided by 2 or the story height divided by 2, whichever is smaller.

3413*A.2.26 FEMA 356 Section 8.3.2.5.* *Modify FEMA 356 Section 8.3.2.5 by the following:*

Default Properties. *Component construction in the building shall be verified to meet the material properties, including fastener size and spacing used in the test assemblies establishing the expected strength and stiffness values given in Tables 8-1 and 8-2.*

3413*A.2.27 FEMA 356 Sections 8.5.4.3, 8.5.5.3, 8.5.6.3, 8.5.7.3, 8.5.8.3. 8.5.9.3, 8.5.10.3, 8.5.11.3, 8.5.12.3, 8.5.13.3, 8.5.14.3, 8.5.15.3, 8.5.16.3, 8.5.17.3, 8.6.3.3, 8.6.4.3, 8.6.5.3, 8.6.6.3, 8.6.7.3, 8.6.8.3, 8.6.9.3, 8.6.10.3, 8,7.2, 8.8.1.3.* *Modify FEMA 356 Sections listed by the following:*

Acceptance Criteria. *Component construction in the building shall be verified to meet the material properties, including fastener size and spacing used in the test assemblies establishing the m-factors and displacement ductility values given in Tables 8-3 and 8-4.*

3413*A.2.28 FEMA 356 Section 9.2.4.* *Modify FEMA 356 Section 9.2.4 by the following:*

Linear Procedures. *Verification of the interstory lateral displacements, isolator displacements, the strength adequacy of the seismic force resisting system and isolation system, and anchorage to the foundation shall be accomplished using the Nonlinear Dynamic Procedure.*

3413*A.2.29 FEMA 356 Section 9.2.5.1.* *Modify FEMA 356 Section 9.2.5.1 by the following:*

Nonlinear Static Procedure. *Verification of the interstory lateral displacements, isolator displacements, the strength adequacy of the seismic force resisting system and isolation system, and anchorage to the foundation shall be accomplished using the Nonlinear Dynamic Procedure.*

3413*A.2.30 FEMA 356 Section 9.2.9.* *Modify FEMA 356 Section 9.2.9 by the following:*

Isolation System Testing and Design Properties - Production Tests. *Production testing and associated acceptance criteria shall be as approved by the enforcement agent.*

3413*A.2.31 FEMA 356 Section 9.2.9.2.9.* *Modify FEMA 356 Section 9.2.9.2.9 by the following:*

Testing Similar Units. *The testing exemption shall require approval by the enforcement agent.*

3413*A.2.32 FEMA 356 Section 9.3.4.* *Modify FEMA 356 Section 9.3.4 by the following:*

Linear Procedures. *Verification of the interstory lateral displacements, damper relative velocities and displacements, the strength adequacy of the seismic force resisting system and damping system, and anchorage to the foundation shall be accomplished using the Nonlinear Dynamic Procedure.*

3413*A.2.33 FEMA 356 Section 9.3.5.1.* *Modify FEMA 356 Section 9.3.5.1 by the following:*

Nonlinear Static Procedure. *Verification of the interstory lateral displacements, damper relative velocities and displacements, the strength adequacy of the seismic force resisting system and damping system, and anchorage to the foundation shall be accomplished using the Nonlinear Dynamic Procedure.*

3413*A.2.34 FEMA 356 Section 9.3.8.* *Modify FEMA 356 Section 9.3.8 by the following:*

Required Tests of Energy Dissipation Devices - Production Tests. *Production testing and associated acceptance criteria shall be as approved by the enforcement agent.*

3413*A.2.35 FEMA 356 Chapter 10.* *Replace FEMA 356 Chapter 10 as follows:*

Simplified Rehabilitation. *Not permitted by OSHPD.*

3413*A.2.36 FEMA 356 Section 11.1.* *Modify FEMA 356 Section 11.1 by the following:*

Scope. *The seismic rehabilitations of nonstructural components and system shall satisfy the requirements of Building Standards Administrative Code (Part 1, Title 24 CCR), Chapter 6.*

3413*A.2.37 FEMA 356 Section 11.2.* *Modify FEMA 356 Section 11.2 by the following:*

Procedure. *The seismic rehabilitations objective shall be to satisfy the Nonstructural Performance Requirements of Building Standards Administrative Code (Part 1, Title 24 CCR), Chapter 6.*

(Relocated from 1649A, 2001CBC) ***SECTION 3414A PEER REVIEW REQUIREMENTS***

3414A.1 General. *Independent peer review is an objective technical review by knowledgeable reviewer(s) experienced in structural design, analysis and performance issues involved. The reviewer(s) shall examine the available information on the condition of building, basic engineering concept employed and recommendations for action.*

3414A.2 Timing of Independent Review. *The independent reviewer (s) shall be selected prior to initiation of substantial portion of the design and analysis work that is to be reviewed, and review shall start as soon as practical and sufficient information defining the project is available.*

3414A.3 Qualifications and Terms of Employment. *The reviewer shall be independent from the design and construction team.*

3414A.3.1 *The reviewer(s) shall have no other involvement in the project before, during or after the review, except in a review capacity.*

3414A.3.2 *The reviewer shall be selected and paid by owner and shall have technical expertise in repair of buildings similar to the one being reviewed, as determined by enforcement agent.*

3414A.3.3 *The reviewer (in case of review team, the chair) shall be a California-licensed structural engineer who is familiar with technical issues and regulations governing the work to be reviewed.*

3414A.3.4 *The reviewer shall serve through completion of the project and shall not be terminated except for failure to perform the duties specified herein. Such termination shall be in writing with copies to enforcement agent, owner, and the engineer of record. When a reviewer is terminated or resigns, a qualified replacement shall be appointed within 10 working days.*

3414A.4 Scope of Review. *Review activities shall include, where appropriate, available construction documents, design criteria, observation of the condition of structure, all new and original inspection reports, including methods of sampling, analyses prepared by the engineer of record and consultants, and the retrofit or repair design. Review shall include consideration of the proposed design approach, method, materials and details.*

3414A.5 Reports. *The reviewer(s) shall prepare a written report to the owner and responsible enforcement agent that covers all aspect of the review performed including conclusions reached by the reviewer. Report shall be issued after the schematic phase, during design development, and at the completion of construction documents, but prior to their issuance of permit. Such report shall include, at the minimum, statement of the following.*

1. *Scope of engineering design peer review with limitations defined.*
2. *The status of the project documents at each review stage.*
3. *Ability of selected materials and framing systems to meet the performance criteria with given loads and configuration.*
4. *Degree of structural system redundancy and the deformation compatibility among structural and non-structural elements.*
5. *Basic constructability of the retrofit or repair system.*
6. *Other recommendation that will be appropriate for the specific project.*
7. *Presentation of the conclusions of the reviewer identifying any areas that need further review, investigation and / or clarification.*
8. *Recommendations.*

3414*A.6 Responses and Corrective Actions.* *The engineer of record shall review the report from the reviewer(s) and shall develop corrective actions and other responses as appropriate. Changes observed during construction that affect the seismic-resisting system shall be reported to the reviewer in writing for review and recommendations. All reports, responses and corrective actions prepared pursuant to this section shall be submitted to the responsible*

enforcement agent and the owner along with other plans, specifications and calculations required. If the reviewer resigns or is terminated by the owner prior to completion of the project, then the reviewer shall submit copies of all reports, notes, and the correspondence to the responsible enforcement agent, the owner, and the engineer of record within 10 working days of such termination.

Notation [For OSHPD]:
Authority: Health and Safety Code Section 129850
Reference: Health and Safety Code Sections 1275 129850 and 129790

CHAPTER 35 - REFERENCED STANDARDS

2001 CBC	PROPOSED ADOPTION	OSHPD				DSA-SS	Comments
		1	2	3	4		
	Adopt entire chapter without amendments						
	Adopt entire chapter with amendments listed below	X	X	X	X	X	Amendments for adding references are not identified with OSHPD or DSA-SS Acronyms.
	Adopt only those sections listed below						

REPEAL OF EXISTING CALIFORNIA AMENDMENTS IN PART OR IN WHOLE THAT ARE NO LONGER NECESSARY AS FOLLOWS:

~~2001 CBC CHAPTER 35 – UNIFORM BUILDING CODE STANDARDS:~~ Repeal all amendments in this Chapter.

Notation [For OSHPD]:
Authority: Health and Safety Code Section 129850
Reference: Health and Safety Code Sections 1275, 129850 and 129790

EXPRESS TERMS

This chapter lists the standards that are referenced in various sections of this document. The standards are listed herein by the promulgating agency of the standard, the standard identification, the effective date and title, and the section or sections of this document that reference the standard. The application of the referenced standards shall be as specified in Section 102.4, *Appendix Chapter 1*.

[For DSA-SS and OSHPD] Reference to other chapters. *In addition to the code sections referenced, the standards listed in this chapter are applicable to the respective code sections in chapters 16A, 17A, 18A, 19A, 21A, 22A, and 34A.*

…

ACI

American Concrete Institute

P.O. Box 9094

Farmington Hills, MI 48333-9094

Standard reference number	Title	Referenced in code section number
216.1-97	Standard Method for Determining Fire Resistance of Concrete and Masonry Construction Assemblies	Table 720.1(2), 721.1

318-05	Building Code Requirements for Structural Concrete	1604.3.2, Table 1704.3, 1704.4.1, Table 1704.4, 1708.3, 1805.4.2.6, 1805.9, 1808.2.23.1.1, 1808.2.23.2,1808.2.23.2.1, 1808.2.23.2.2, 1809.2.3.2, 1809.2.3.2.2, 1810.1.2.2, 1812.8,1901.2, 1901.3, 1901.4, 1902, 1903.1, 1905.3, 1905.4, 1905.5, 1906.3,1907.1, 1907.2,1907.6, 1907.7.2, 1907.7.3, 1907.7.4, 1907.7.5, 1907.8, 1907.9, 1907.10, 1907.11, 1907.12, 1907.13, 1908 ,1908.1.1, 1908.1.2,1908.1.3, 1908.1.4, 1908.1.5, 1908.1.6, 1908.1.7, 1908.1.8, 1908.1.9, 1908.1.10, 1908.1.11, 1908.1.12, 1908.1.13, 1908.1.14, 1908.1.15, 1908.1.16,1909.1, 1909.3, 1909.4, 1909.5, 1909.6, 1912.1, 2108.3, 2205.3
530-05	Building Code Requirements for Masonry Structures	1405.5, 1405.5.3, 1405.9, 1604.3.4, 1704.5, 1704.5.1, Table 1704.5.1, 1704.5.2, Table 1703.3.1, 1708.1.1, 1708.1.2, 1708.1.3, 1805.5.2, 1812.7, 2101.2.3, 2101.2.4, 2101.2.5, 2103.11.6, 2106.1, 2106.1.1.1, 2106.1.1.2, 2106.1.1.3, 2106.3, 2106.4, 2106.5, 2106.6, 2107.1, 2107.2, 2107.2.1, 2107.2.2, 2107.2.4, 2107.2.5, 2107.2.6, 2108.1, 2108.2, 2108.4, 2109.1, 2109.2.3.1, 2109.2.3.2
530.1-05	Specifications for Masonry Structures	1405.5.1, 1405.9.1, Table1704.5.1, Table 1704.5.3, 1805.5.2, 2103.11.7, 2104.1, 2104.1.1, 2104.3,
506-05	*Guide to Shotcrete*	*1913A*

…

AISC	American Institute of Steel Construction One East Wacker Drive, Suite 3100 Chicago, IL 60601-2001	
Standard reference number	Title	Referenced in code section number
341-05	Seismic Provisions for Structural Steel Buildings, including Supplement No. 1 dated 2006	1613.6.2, 1707.2, 1708.4, 2205.2.1, 2205.2.2, 2205.3, 2205.3.1
360-05	Specification for Structural Steel Buildings	1604.3.3, Table 1704.3, 2203.2, 2205.1, 2205.3
358-05	*Prequalified Connections for Special and Intermediate Steel Moment Frames for Seismic Applications*	*2205A,3413*

...

AITC	American Institute of Timber Construction Suite 140 7012 S. Revere Parkway Englewood, CO 80112	
Standard reference number	Title	Referenced in code section number
AITC Technical Note 7-96	Calculation of Fire Resistance of Glued Laminated Timbers	721.6.3.3
AITC 104-03	Typical Construction Details	2306.1
AITC 110-0	Standard Appearance Grades for Structural Glued Laminated Timber	2306.1
AITC 111-05	*Recommended Practice for Protection of Structural Glued Laminated Timber During Transit, Storage and Erection*	*2303.1.3.1*
AITC 113-0	Standard for Dimensions of Structural Glued Laminated Timber	2306.1
AITC 117-04	Standard Specifications for Structural Glued Laminated Timber of Softwood Species	2306.1
AITC 119-96	Standard Specifications for Structural Glued Laminated Timber of Hardwood Species	2306.1
AITC 200-04	Manufacturing Quality Control Systems Manual for Structural Glued Laminated Timber	2306.1
AITC 404-05	*Standard for Radially Reinforcing Curved Glued Laminated Timber Members to Resist Radial Tension*	*2303.1.3.1*
ANSI/AITC A 190.1-02	Structural Glued Laminated Timber	2303.1.3, 2306.1

...

ASCE/SEI	American Society of Civil Engineers Structural Engineering Institute 1801 Alexander Bell Drive Reston, VA 20191-4400

Standard reference number	Title	Referenced in code section number
...	...	...
32-01	Design and Construction of Frost Protected Shallow Foundations	1805.2.1
41-06	*Seismic Rehabilitation of Existing Buildings*	*3415.5,3415.6,3415.8, 3417.2,3417.5,3417.7, 3417.9*

...

ASTM	ASTM International 100 Barr Harbor Drive West Conshohocken, PA 19428-2959

Standard reference number	Title	Referenced in code section number
...		
C 144-04	*Standard specification for Aggregate for Masonry Mortar*	*2103A.8*
C 404-04	*Standard specification for Aggregate for Masonry Grout*	*2103A.12.3*
C 1567-04	*Standard Test Method for Determining the Potential Alkali-Silica Reactivity of the Cementicious Materials and aggregate (Accelerated Mortar-Bar*	*1903A.3*

Method)

AWS	American Welding Society 550 N.W. LeJeune Road Miami, FL 33126	
Standard reference number	Title	Referenced in code section number
D1.1-04	Structural Welding Code-Steel	Table 1704.3, 1704.3.1, 1708.4
D1.3-98	Structural Welding Code-Sheet Steel	Table 1704.3
D1.4-98	Structural Welding Code-Reinforcing Steel	Table 1704.3,
QC1-06	*Standard for AWS Certification of Welding Inspectors.*	*1704A.3.1.1*

...

FEMA	Federal Emergency Management Agency Federal Center Plaza 500 C Street S.W. Washington, DC 20472	
Standard reference number	Title	Referenced in code section number
FIA-TB11-01	Crawlspace Construction for Buildings Located in Special Flood Hazard Areas	1807.1.2.1
FEMA 356	*Prestandard and Commentary for the Seismic Rehabilitation of Buildings*	*3403.2.3.3,3403A.2.3.3, 3403A.13*

...

ICC	International Code Council 5203 Leesburg Pike, Suite 600 Falls Church, VA 22041	
Standard reference	Title	Referenced in code

number		section number
ICC/ANSI A117.1-03	Accessible and Usable Buildings and Facilities	406.2.2, 907.9.1.3,1007.6.5, 1010.1, 1010.6.5, 1010.9, 1011.3, 1101.2, 1102.1, 1103.2.14, 1107.2, 1109.1, 1109.2, 1109.2.1.1, 1109.2.2, 1109.3, 1109.4, 1109.8, 3001.3, 3409.5, 3409.7.2, 3409.7.3
ICC 300-02	ICC Standard on Bleachers, Folding and Telescopic Seating and Grandstands	1025.1.1
ICC EC-06	ICC Electrical Code™	101.4.1, 107.3, 414.5.4, 414.9.2.8.1, 904.3.1, 907.5, 909.11, 909.12.1, 909.16.3, 1205.4.1, 1405.10.4, 2701.1, 2702.1, 3401.3
IECC-06	International Energy Conservation Code®	101.4.7, 1202.3.2, 1301.1.1, 1403.2
IFC-06	International Fire Code®	101.4.6, 102.6, 201.3, 307.9, Table 307.7(1), Table 307.7(2), 307.9, 404.2,406.5.1, 406.5.2, 406.6.1, 410.3.6, 411.1, 412.4.1, 413.1, 414.1.1, 414.1.2, 414.1.2.1, 414.2.4, Table 414.2.4, 414.3, 414.5, 414.5.1, Table 414.5.1, 414.5.2, 414.5.4, 414.5.5, 414.6, 415.1, 415.3, 415.3.1, Table 415.3.1, Table 415.3.2, 415.7, 415.7.1, 415.7.1.4, 415.7.2, 415.7.2.3, 415.7.2.5, 415.7.2.7, 415.7.2.8, 415.7.2.9, 415.7.3, 415.7.3.3.3, 415.7.3.5, 415.7.4, 415.8, 415.9.1, 415.9.2.7, 415.9.5.1, 415.9.7.2, 704.8.2, 706.1, 901.2, 901.3, 901.5, 901.6.2, 903.2.6.1, 903.2.11, Table 903.2.13, 903.5, 904.2.1, 905.1, 906.1, 907.2.5, 907.2.12.2, 907.2.14, 907.2.16, 907.19, 909.20, 910.2.3, Table 910.3, 1001.3, 1203.4.2, 1203.5, 2702.2.8, 2702.2.10, 2702.2.11, 2702.2.12, 2702.3, 3102.1, 3103.1, 3309.2, 3401.3, 3410.3.2, 3410.6.8.1, 3410.6.14, 3410.6.14.1
IFGC-06	International Fuel Gas Code®	101.4.2, 201.3, 415.7.3, 2113.11.1.2, 2113.15, 2801.1, 3401.3
IMC-06	International Mechanical Code®	101.4.3, 201.3, 307.9, 406.4.2, 406.6.3, 406.6.5, 409.3, 412.4.6, 414.1.2, 414.1.2.1, 414.1.2.2, 414.3, 415.7.1.4, 415.7.2, 415.7.2.8, 415.7.3, 415.7.4, 415.9.11.1, 416.3, 603.1, 707.2, 716.2.2, 716.5.4, 716.6.1, 716.6.2, 716.6.3, 717.5, 719.1, 903.2.12.1, 904.2.1, 904.11, 908.6, 909.1, 909.10.2, 1014.5, 1016.4.1, 1203.1, 1203.2.1, 1203.4.2, 1203.4.2.1, 1203.5, 1209.3, 2304.5, 3004.3.1, 3410.6.7.1, 3410.6.8
IPC-06	International Plumbing Code®	101.4.4,201.3, 415.7.4, 717.5, 903.3.5, 1206.3.3, 1503.4, 1807.4.3, 2901.1, 2902.1.1, 3305.1, 3401.3,
IPMC-06	International Property Maintenance Code®	101.4.5, 102.6, 103.3, 3401.3, 3410.3.2.

IPSDC-06	International Private Sewage Disposal Code®	101.4.4, 2901.1, 3401.3
IRC-06	International Residential Code®	101.2, 308.3, 308.5 1706.1.1, 2308.1, 3401.3
IWUIC-06	International Wildland-Urban Interface Code™	Table 1505.1
SBCCI SSTD 10-99	Standard for Hurricane Resistant Residential Construction	1609.1.1, 2308.2.1
SBCCI SSTD 11-97	Test Standard for Determining Wind Resistance of Concrete or Clay Roof Tiles	1715.2.1, 1715.2.2
ICC-ES AC 43-06	*Acceptance criteria for steel deck roof and floor systems*	*2209A.3*
IEBC 2006	*International Existing Buildings Code*	*3417.8*

…

PCI	Precast Prestressed Concrete Institute 175 W. Jackson Boulevard, Suite 1859 Chicago, IL 60604-9773	

Standard reference number	Title	Referenced in code section number
MNL 124-89	Design for Fire Resistance of Precast Prestressed Concrete	721.2.3.1, Table 721.2.3(4)
MNL 128-0	Recommended Practice for Glass Fiber Reinforced Concrete Panels	1903.2
PCI 120-04	*PCI Design Handbook, 6th Edition*	*1908A.1*

…

Notation [For DSA-SS]:
Authority: Education Code Sections 17310, 81142; Health & Safety Code Section 16022
Reference(s): Education Code Sections 17280 - 17317, and 811130 - 81149; Health & Safety Code Sections 16000 – 16023

Notation [For OSHPD]:
Authority: Health and Safety Code Section 129850
Reference: Health and Safety Code Sections 1275, 129850 and 129790

Appendix Chapter 1 - Administration

2001 CBC	PROPOSED ADOPTION	OSHPD				Comments
		1	2	3	4	
	Adopt entire chapter without amendments			X		
	Adopt entire chapter with amendments listed below	X	X		X	
	Adopt only those sections listed below					
	104.11.3	X			X	

EXPRESS TERMS

SECTION 101 - GENERAL

101.1 Title. These regulations shall be known as the *California Building Code* of *the State of California* ~~*[NAME OF JURISDICTION]*~~, hereinafter referred to as "this code."

101.2 Scope. The provisions of this code shall apply to the construction, alteration, movement, enlargement, replacement, repair, equipment, use and occupancy, location, maintenance, removal and demolition of every building or structure or any appurtenances connected or attached to such buildings or structures.

> **Exception:** Detached one- and two-family dwellings and multiple single-family dwellings (townhouses) not more than three stories above grade plane in height with a separate means of egress and their accessory structures shall comply with the *International Residential Code*.

…

101.4 Referenced codes. The other codes listed in Sections 101.4.1 through 101.4.7 and referenced elsewhere in this code shall be considered part of the requirements of this code to the prescribed extent of each such reference.

> **101.4.1 Electrical.** The provisions of the ~~*ICC*~~ *California Electrical Code* shall apply to the installation of electrical systems, including alterations, repairs, replacement, equipment, appliances, fixtures, fittings and appurtenances thereto.
>
> **101.4.2 Gas.** The provisions of the ~~*International Fuel Gas*~~ *California Mechanical Code* shall apply to the installation of gas piping from the point of delivery, gas appliances and related accessories as covered in this code. These requirements apply to gas piping systems extending from the point of delivery to the inlet connections of appliances and the installation and operation of residential and commercial gas appliances and related accessories.
>
> **101.4.3 Mechanical.** The provisions of the ~~*International*~~ *California Mechanical Code* shall apply to the installation, alterations, repairs and replacement of mechanical systems, including equipment, appliances, fixtures, fittings and/or appurtenances, including ventilating, heating, cooling, air-conditioning and refrigeration systems, incinerators and other energy-related systems.
>
> **101.4.4 Plumbing.** The provisions of the ~~*International*~~ *California Plumbing Code* shall apply to the installation, alteration, repair and replacement of plumbing systems, including equipment, appliances, fixtures, fittings and appurtenances, and where connected to a water or sewage system and all aspects of a medical gas system. The provisions of the ~~*International Private Sewage Disposal*~~ *California Plumbing Code* shall apply to private sewage disposal systems.

101.4.5 Property maintenance. The provisions of the ~~*International Property Maintenance*~~ *California Mechanical Code* shall apply to existing structures and premises; equipment and facilities; light, ventilation, space heating, sanitation, life and fire safety hazards; responsibilities of owners, operators and occupants; and occupancy of existing premises and structures.

101.4.6 Fire prevention. The provisions of the *International Fire Code* shall apply to matters affecting or relating to structures, processes and premises from the hazard of fire and explosion arising from the storage, handling or use of structures, materials or devices; from conditions hazardous to life, property or public welfare in the occupancy of structures or premises; and from the construction, extension, repair, alteration or removal of fire suppression and alarm systems or fire hazards in the structure or on the premises from occupancy or operation.

101.4.7 Energy. The provisions of the *International Energy Conservation Code* shall apply to all matters governing the design and construction of buildings for energy efficiency.

Exception: [For OSHPD 1,2 & 4] Not permitted by OSHPD.

Notation [For OSHPD]:
Authority: Health and Safety Code Section 129850
Reference: Health and Safety Code Sections 1275, 129850 and 129790

SECTION 102 - APPLICABILITY

102.1 General. Where, in any specific case, different sections of this code specify different materials, methods of construction or other requirements, the most restrictive shall govern. Where there is a conflict between a general requirement and a specific requirement, the specific requirement shall be applicable.

…

102.6 Existing structures. The legal occupancy of any structure existing on the date of adoption of this code shall be permitted to continue without change, except as is specifically covered in this code, the ~~*International Property Maintenance*~~ *California Mechanical Code* or the *International Fire Code*, or as is deemed necessary by the building official for the general safety and welfare of the occupants and the public.

SECTION 103 - DEPARTMENT OF BUILDING SAFETY

103.1 Creation of enforcement agency. The Department of Building Safety is hereby created and the official in charge thereof shall be known as the building official.

103.2 Appointment. The building official shall be appointed by the chief appointing authority of the jurisdiction.

103.3 Deputies. In accordance with the prescribed procedures of this jurisdiction and with the concurrence of the appointing authority, the building official shall have the authority to appoint a deputy building official, the related technical officers, inspectors, plan examiners and other employees. Such employees shall have powers as delegated by the building official. For the maintenance of existing properties, see the ~~*International Property Maintenance*~~ *California Mechanical Code*.

SECTION 104 - DUTIES AND POWERS OF BUILDING OFFICIAL

104.1 General. The building official is hereby authorized and directed to enforce the provisions of this code. The building official shall have the authority to render interpretations of this code and to adopt policies and procedures in order to clarify the application of its provisions. Such interpretations, policies and procedures shall be in compliance with the intent and purpose of this code. Such policies and procedures shall not have the effect of waiving requirements specifically provided for in this code.

…

104.11 Alternative materials, design and methods of construction and equipment. The provisions of this code are not intended to prevent the installation of any material or to prohibit any design or method of construction not specifically prescribed by this code, provided that any such alternative has been approved. An alternative material, design or method of construction shall be approved where the building official finds that the proposed design is satisfactory and complies with the intent of the provisions of this code, and that the material, method or work offered is, for the purpose intended, at least the equivalent of that prescribed in this code in quality, strength, effectiveness, fire resistance, durability and safety.

104.11.1 Research reports. Supporting data, where necessary to assist in the approval of materials or assemblies not specifically provided for in this code, shall consist of valid research reports from approved sources.

104.11.2 Tests. Whenever there is insufficient evidence of compliance with the provisions of this code, or evidence that a material or method does not conform to the requirements of this code, or in order to substantiate claims for alternative materials or methods, the building official shall have the authority to require tests as evidence of compliance to be made at no expense to the jurisdiction. Test methods shall be as specified in this code or by other recognized test standards. In the absence of recognized and accepted test methods, the building official shall approve the testing procedures. Tests shall be performed by an approved agency. Reports of such tests shall be retained by the building official for the period required for retention of public records.

104.11.3 [For OSHPD 1 & 4] Peer Review. *When peer review is required, it shall be performed per section 3414A.*

Notation [For OSHPD]:
Authority: Health and Safety Code Section 129850
Reference: Health and Safety Code Sections 1275, 129850 and 129790

SECTION 105 - PERMITS

…

SECTION 106 - CONSTRUCTION DOCUMENTS

…

SECTION 107 - TEMPORARY STRUCTURES AND USES

107.1 General. The building official is authorized to issue a permit for temporary structures and temporary uses. Such permits shall be limited as to time of service, but shall not be permitted for more than 180 days. The building official is authorized to grant extensions for demonstrated cause.

…

107.3 Temporary power. The building official is authorized to give permission to temporarily supply and use power in part of an electric installation before such installation has been fully completed and the final certificate of completion has been issued. The part covered by the temporary certificate shall comply with the requirements specified for temporary lighting, heat or power in the ~~*ICC*~~ *California Electrical Code*.

…

SECTION 108 - FEES

…

SECTION 109 - INSPECTIONS

…

SECTION 110 - CERTIFICATE OF OCCUPANCY

…

SECTION 111 - SERVICE UTILITIES

…

SECTION 112 - BOARD OF APPEALS

…

SECTION 113 - VIOLATIONS

…

SECTION 114 - STOP WORK ORDER

…

SECTION 115 - UNSAFE STRUCTURES AND EQUIPMENT

…

Notation [For OSHPD]:
Authority: Health and Safety Code Section 129850
Reference: Health and Safety Code Sections 1275, 129850 and 129790

EXPRESS TERMS

APPENDIX J
GRADING

2001 CBC	PROPOSED ADOPTION	OSHPD				DSA-SS	Comments
		1	2	3	4		
	Adopt entire chapter without amendments			X			
	Adopt entire chapter with amendments listed below	X	X		X		
	Adopt only those sections listed below					X	
	J101					X	
	J102					X	
	J104.1					X	Editorial
	J104.2					X	Editorial
	J104.4	X	X		X		
	J105					X	
	J105.1					X	Editorial
	J106					X	
	J107					X	
	J107.5	X	X	X	X		
	J108					X	
	J109					X	
	J110					X	
	J111					X	

REPEAL OF EXISTING CALIFORNIA AMENDMENTS IN PART OR IN WHOLE THAT ARE NO LONGER NECESSARY AS FOLLOWS:

~~2001 CBC CHAPTER 33 – EXCAVATION AND GRADING:~~ Repeal all amendments in this Chapter.

Notation [For OSHPD]:
Authority: Health and Safety Code Section 129850
Reference: Health and Safety Code Sections 1275 129850, and 129790

The provisions contained in this appendix are not mandatory unless specifically referenced in the adopting ordinance.

EXPRESS TERMS

SECTION J101 - GENERAL

J101.1 Scope. The provisions of this chapter apply to grading, excavation and earthwork construction, including fills and embankments. Where conflicts occur between the technical requirements of this chapter and the soils report, the soils report shall govern.

…

SECTION J102 - DEFINITIONS

…

SECTION J103 - PERMITS REQUIRED

…

SECTION J104 - PERMIT APPLICATION AND SUBMITTALS

J104.1 Submittal requirements. In addition to the provisions of Section 105.3, *Appendix Chapter 1,* the applicant shall state the estimated quantities of excavation and fill.

J104.2 Site plan requirements. In addition to the provisions of Section 106, *Appendix Chapter 1,* a grading plan shall show the existing grade and finished grade in contour intervals of sufficient clarity to indicate the nature and extent of the work and show in detail that it complies with the requirements of this code. The plans shall show the existing grade on adjoining properties in sufficient detail to identify how grade changes will conform to the requirements of this code.

…

J104.4 Liquefaction study. For sites with mapped maximum considered earthquake spectral response accelerations at short periods (S_s) greater than 0.5g as determined by Section 1613, a study of the liquefaction potential of the site shall be provided, and the recommendations incorporated in the plans.

> **Exception:** *1)* A liquefaction study is not required where the building official determines from established local data that the liquefaction potential is low.
>
> *2)* ***[For OSHPD 1, 2 & 4]*** *Not permitted by OSHPD.*

…

Notation [For OSHPD]:
Authority: Health and Safety Code Section 129850
Reference: Health and Safety Code Sections 1275, 129850 and 129790

SECTION J105 - INSPECTIONS

J105.1 General. Inspections shall be governed by Section 109, *Appendix Chapter 1*, of this code.

…

SECTION J106 – EXCAVATIONS

…

SECTION J107 – FILLS

J107.1 General. Unless otherwise recommended in the soils report, fills shall conform to provisions of this section.

…

J107.5 Compaction. All fill material shall be compacted to 90 percent of maximum density as determined by ASTM D 1557, Modified Proctor, in lifts not exceeding 12 inches (305 mm) in depth.

[For OSHPD 1, 2 & 4] *This section establishes minimum requirements only.*
…

Notation [For OSHPD]:
Authority: Health and Safety Code Section 129850
Reference: Health and Safety Code Sections 1275, 129850 and 129790

SECTION J108 – SETBACKS
…
SECTION J109 - DRAINAGE AND TERRACING
…
SECTION J110 - EROSION CONTROL
…
SECTION J111 - REFERENCED STANDARDS
…

Notation [For DSA-SS]:
Authority: Education Code Sections 17310, 81142; Health & Safety Code Section 16022
Reference(s): Education Code Sections 17280 - 17317, and 811130 - 81149; Health & Safety Code Sections 16000 – 16023

Notation [For OSHPD]:
Authority: Health and Safety Code Section 129850
Reference: Health and Safety Code Sections 1275, 129850 and 129790