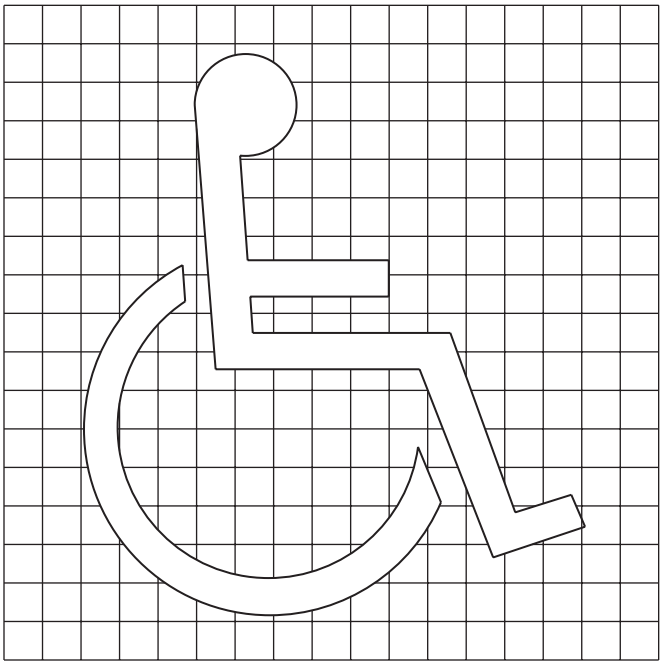

(a) SYMBOL PROPORTIONS

(b) DI SPLAY CO NDITI ONS

THESE DIAGRAMS ILLUSTRATE THE SPECIFIC REQUIREMENTS OF THESE REGULATIONS AND ARE INTENDED ONLY AS AN AID FOR BUILDING DESIGN AND CONSTRUCTION.

FIGURE 11A-1A—INTERNATIONAL ACCESSIBILITY SYMBOL

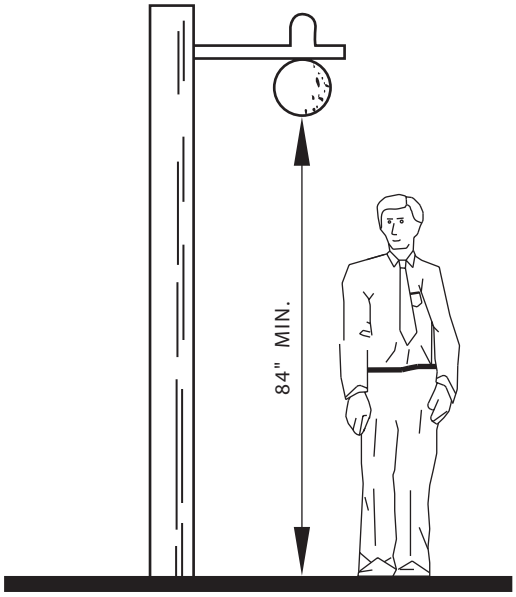

THIS DIAGRAM ILLUSTRATES THE SPECIFIC REQUIREMENTS OF THESE REGULATIONS AND IS INTENDED ONLY AS AN AID FOR BUILDING DESIGN AND CONSTRUCTION.

FIGURE 11A-1B—OVERHANGING OBSTRUCTION

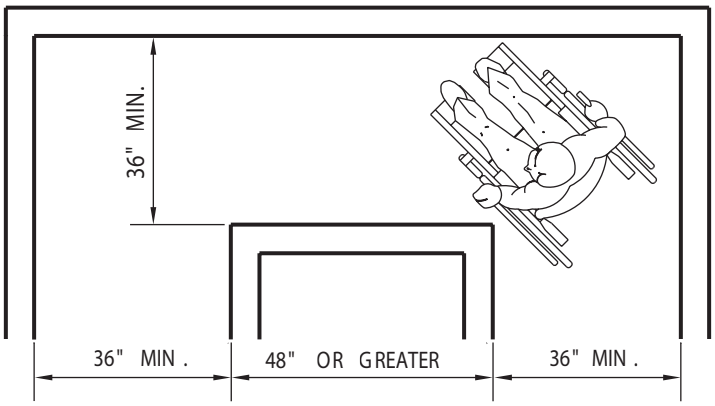

(a) 90° TURN

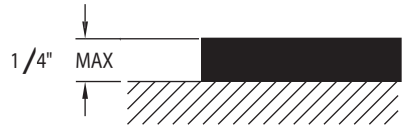

(c) CHANGE IN LEVEL

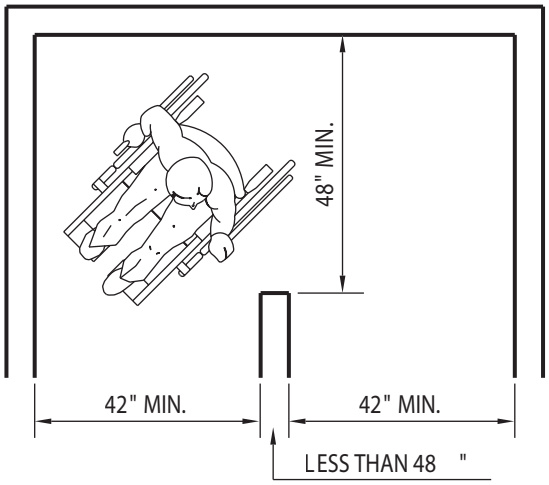

(d) TURNS AROUND AN OBSTRUCTION

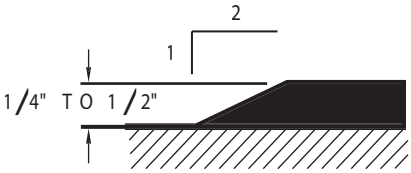

(d) CHANGE IN LEVEL

THESE DIAGRAMS ILLUSTRATE THE SPECIFIC REQUIREMENTS OF THESE REGULATIONS AND ARE INTENDED ONLY AS AN AID FOR BUILDING DESIGN AND CONSTRUCTION

FIGURE 11A-1C—WIDTH OF ACCESSIBLE ROUTE

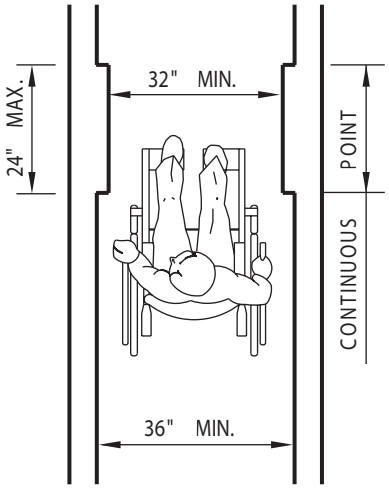

FIGURE 11A-1E—MINIMUM CLEAR WIDTH FOR SINGLE WHEELCHAIR

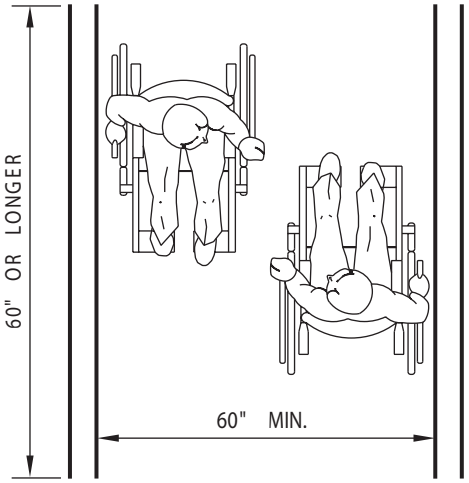

FIGURE 11A-1F—MINIMUM CLEAR WIDTH FOR TWO WHEELCHAIRS

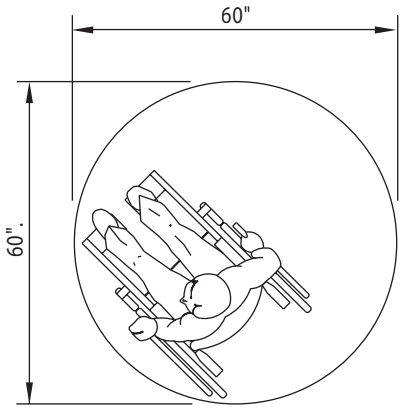

(a) 60 INCHES DIAMETER SPACE

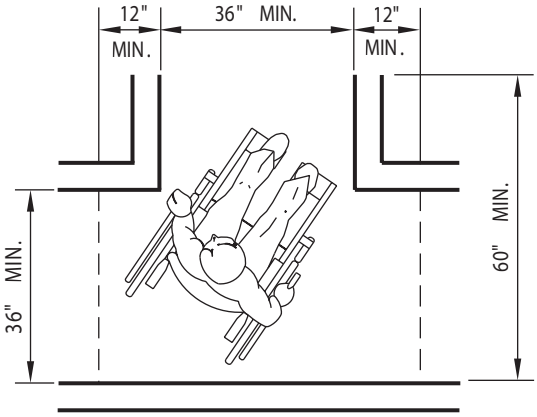

(b) T–SHAPED SPACE FOR 180° TURNS

THESE DIAGRAMS ILLUSTRATE THE SPECIFIC REQUIREMENTS OF THESE REGULATIONS AND ARE INTENDED ONLY AS AN AID FOR BUILDING DESIGN AND CONSTRUCTION.

FIGURE 11A-1D—WHEELCHAIR TURNING SPACE

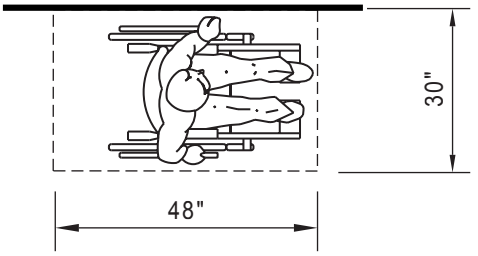

PARALLEL APPROACH

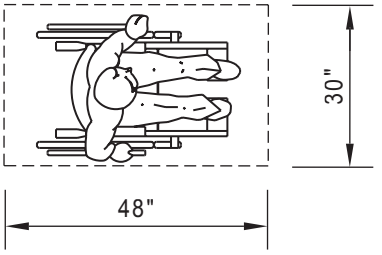

CLEAR FLOOR SPACE

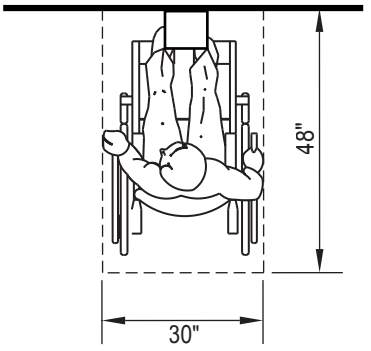

FORWARD APPROACH

THESE DIAGRAMS ILLUSTRATE THE SPECIFIC REQUIREMENTS OF THESE REGULATIONS AND ARE INTENDED ONLY AS AN AID FOR BUILDING DESIGN AND CONSTRUCTION

FIGURE 11A-1G—MINIMUM CLEAR FLOOR SPACE FOR WHEELCHAIRS

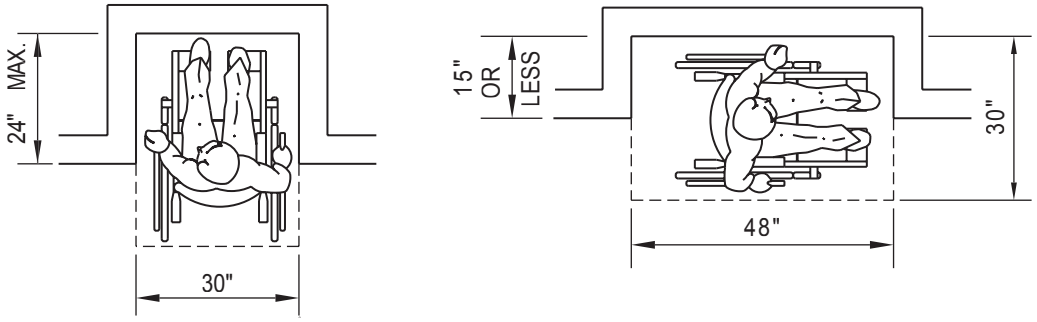

(a) CLEAR FLOOR SPACE IN ALCOVES

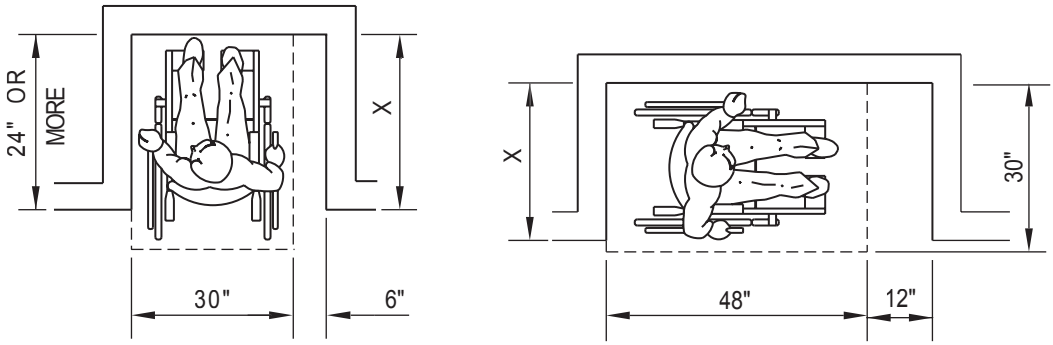

NOTE : IF X > 24 INCHES, THEN AN ADDITIONAL MANEUVERING CLEARANCE OF 6 INCHES SHALL BE PROVIDED AS SHOWN.

NOTE : IF X > 15 INCHES, THEN AN ADDITIONAL MANEUVERING CLEARANCE OF 12 INCHES SHALL BE PROVIDED AS SHOWN.

(b) ADDITIONAL MANEUVERING CLEARANCE FOR ALCOVES

THESE DIAGRAMS ILLUSTRATE THE SPECIFIC REQUIREMENTS OF THESE REGULATIONS AND ARE INTENDED ONLY AS AN AID FOR BUILDING DESIGN AND CONSTRUCTION

FIGURE 11A-1H—MINIMUM CLEAR FLOOR SPACE FOR WHEELCHAIRS

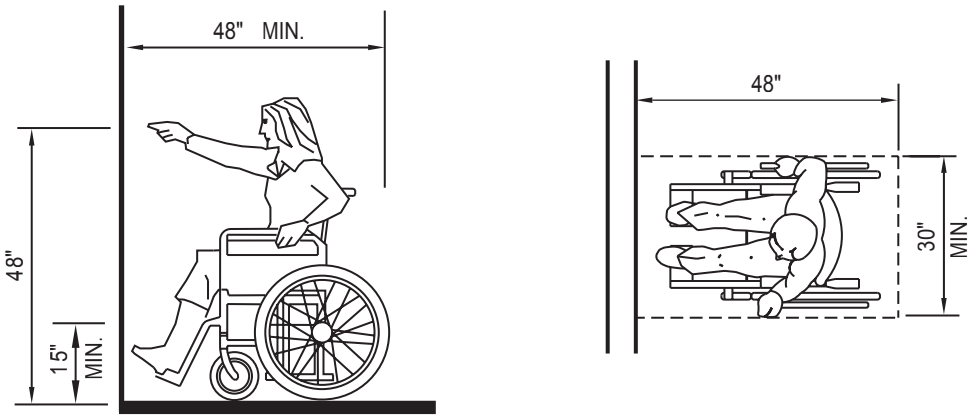

(a) HIGH FORWARD REACH LIMIT

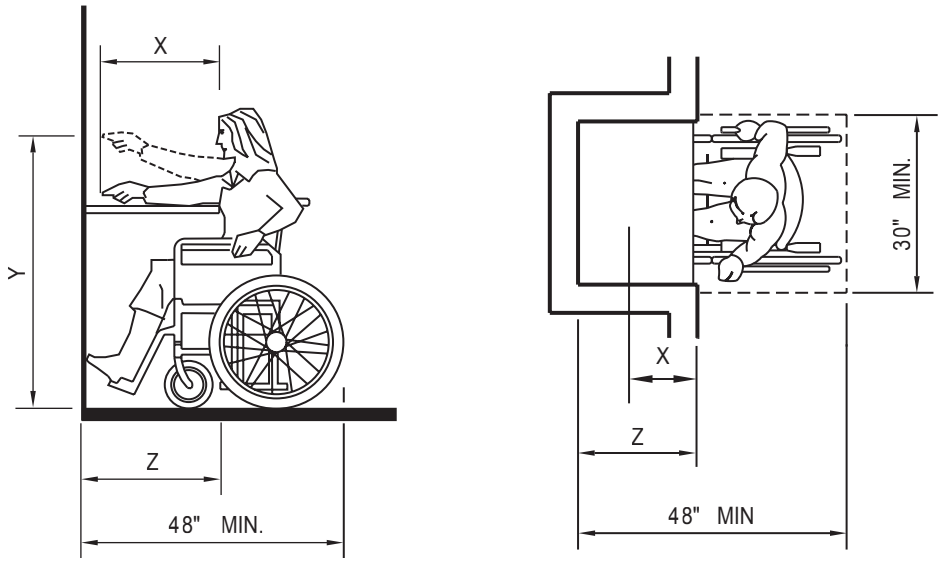

NOTE :
X SHALL BE LESS THAN OR EQUAL TO 25 INCHES Z SHALL BE GREATER THAN OR EQUAL TO X. WHEN X IS LESS THAN 20 INCHES, THEN Y SHALL BE 48 INCHES MAXIMUM. WHEN X IS 20 TO 25 INCHES, THEN Y SHALL BE 44 INCHES MAXIMUM.

(b) MAXIMUM FORWARD REACH OVER AN OBSTRUCTION

THESE DIAGRAMS ILLUSTRATE THE SPECIFIC REQUIREMENTS OF THESE REGULATIONS AND ARE INTENDED ONLY AS AN AID FOR BUILDING DESIGN AND CONSTRUCTION

FIGURE 11A-1I—FORWARD REACH

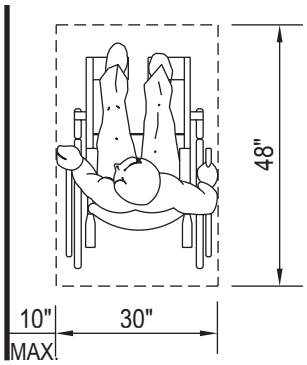

(a) CLEAR FLOOR SPACE PARALLEL APPROACH

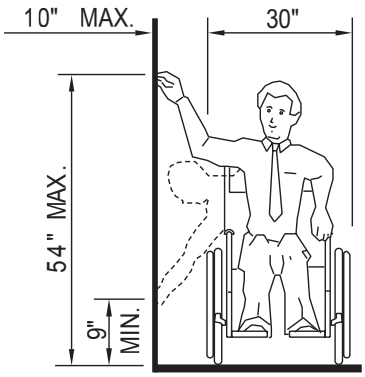

(b) HIGH AND LOW SIDE REACH LIMITS

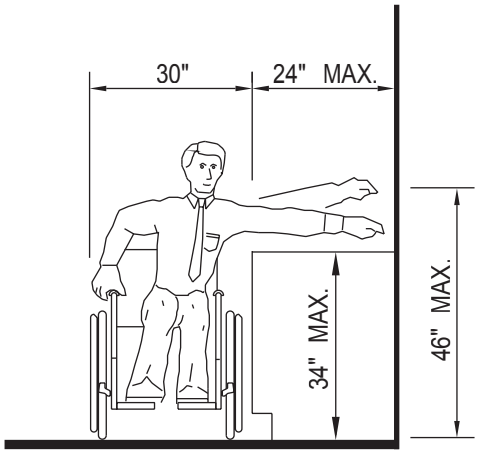

(c) MAXIMUM SIDE REACH OVER OBSTRUCTION

THESE DIAGRAMS ILLUSTRATE THE SPECIFIC REQUIREMENTS OF THESE REGULATIONS AND ARE INTENDED ONLY AS AN AID FOR BUILDING DESIGN AND CONSTRUCTION

FIGURE 11A-1J—SIDE REACH

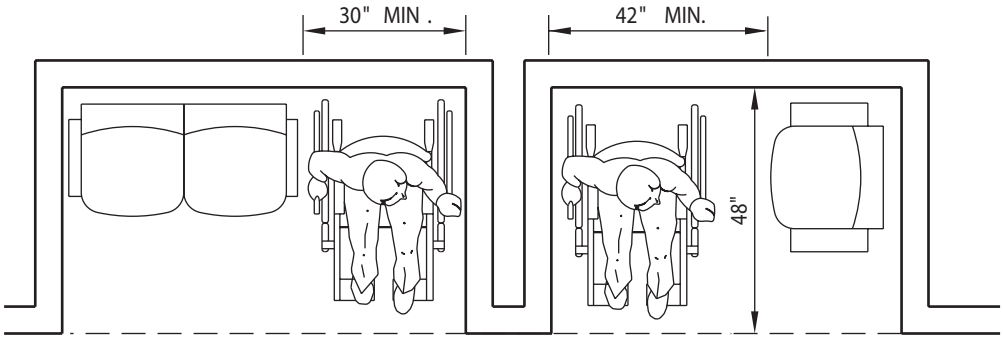

ACCESSIBLE PATH OF TRAVEL

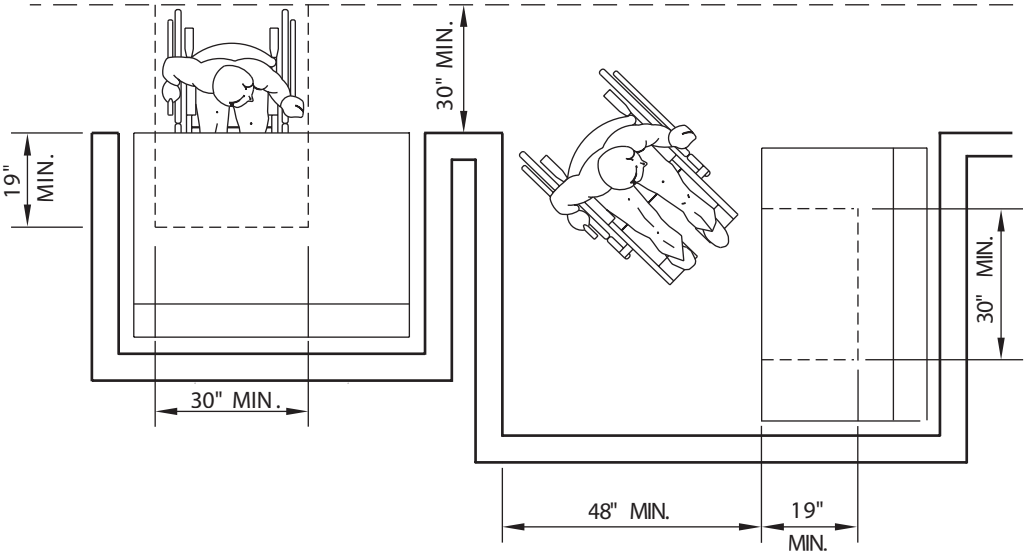

THESE DIAGRAMS ILLUSTRATE THE SPECIFIC REQUIREMENTS OF THESE REGULATIONS AND ARE INTENDED ONLY AS AN AID FOR BUILDING DESIGN AND CONSTRUCTION.

FIGURE 11A-1K—MINIMUM CLEARANCES FOR SEATING AND TABLE

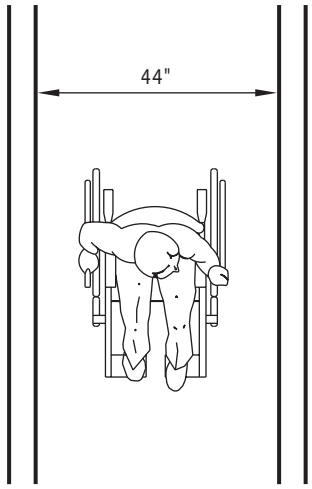

MINIMUM CORRIDOR WIDTH

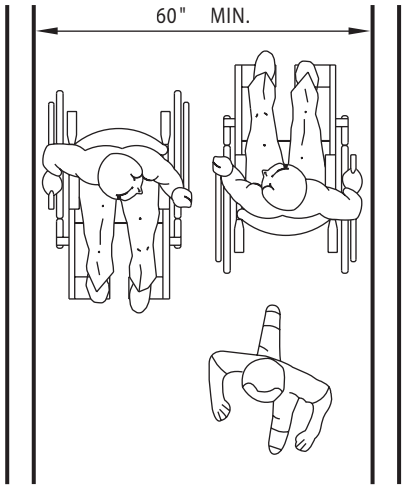

MINIMUM WIDTH FOR
CORRIDORS OVER 200

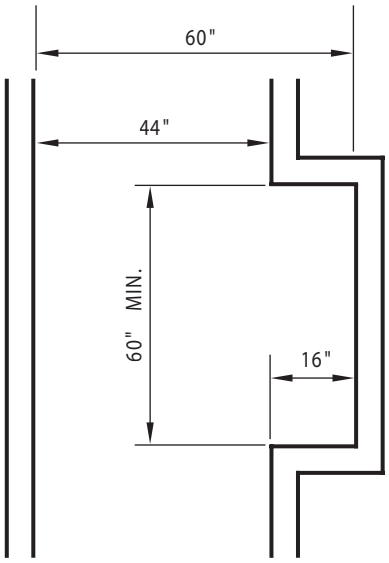

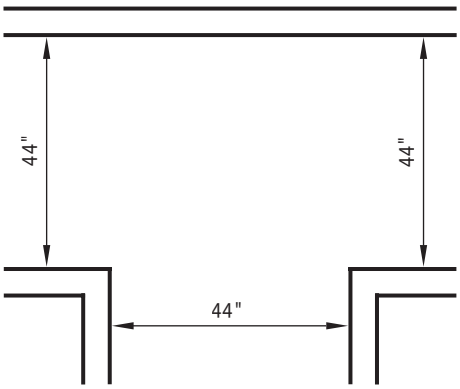

PASSING ALCOVES FOR CORRIDORS OVER
200' IN LIEU OF 60" MIN. WIDTH

THESE DIAGRAMS ILLUSTRATE THE SPECIFIC REQUIREMENTS OF THESE REGULATIONS AND ARE INTENDED ONLY AS AN AID FOR BUILDING DESIGN AND CONSTRUCTION.

FIGURE 11A-1L—CORRIDOR OVER 200 FEET (60 960 mm)

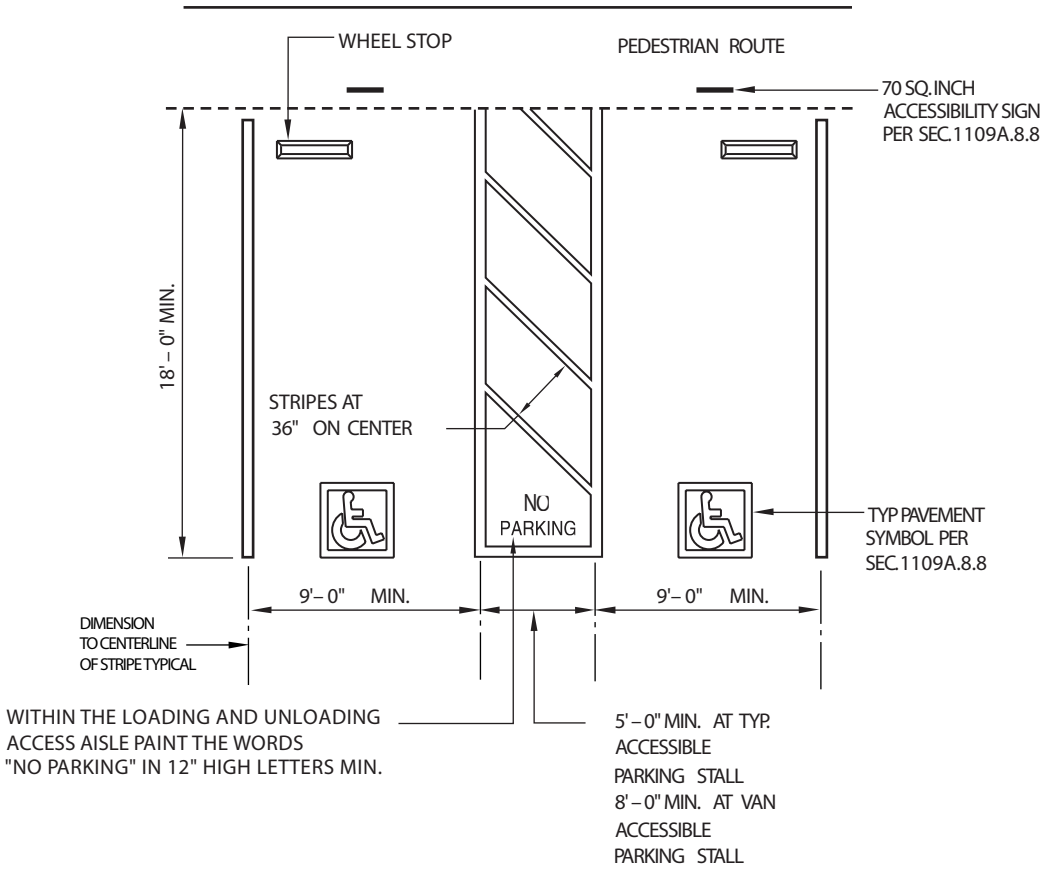

THIS DIAGRAM ILLUSTRATES THE SPECIFIC REQUIREMENTS OF THESE REGULATIONS AND IS INTENDED ONLY AS AN AID FOR BUILDING DESIGN AND CONSTRUCTION.

FIGURE 11A-2A—DOUBLE PARKING STALLS

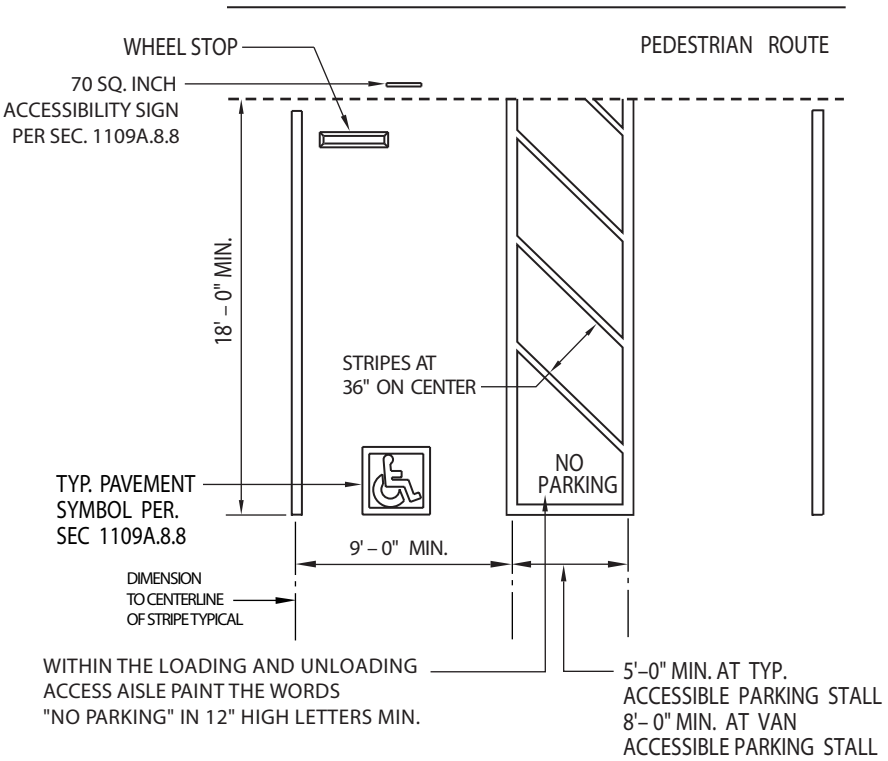

FIGURE 11A-2B—SINGLE PARKING STALLS

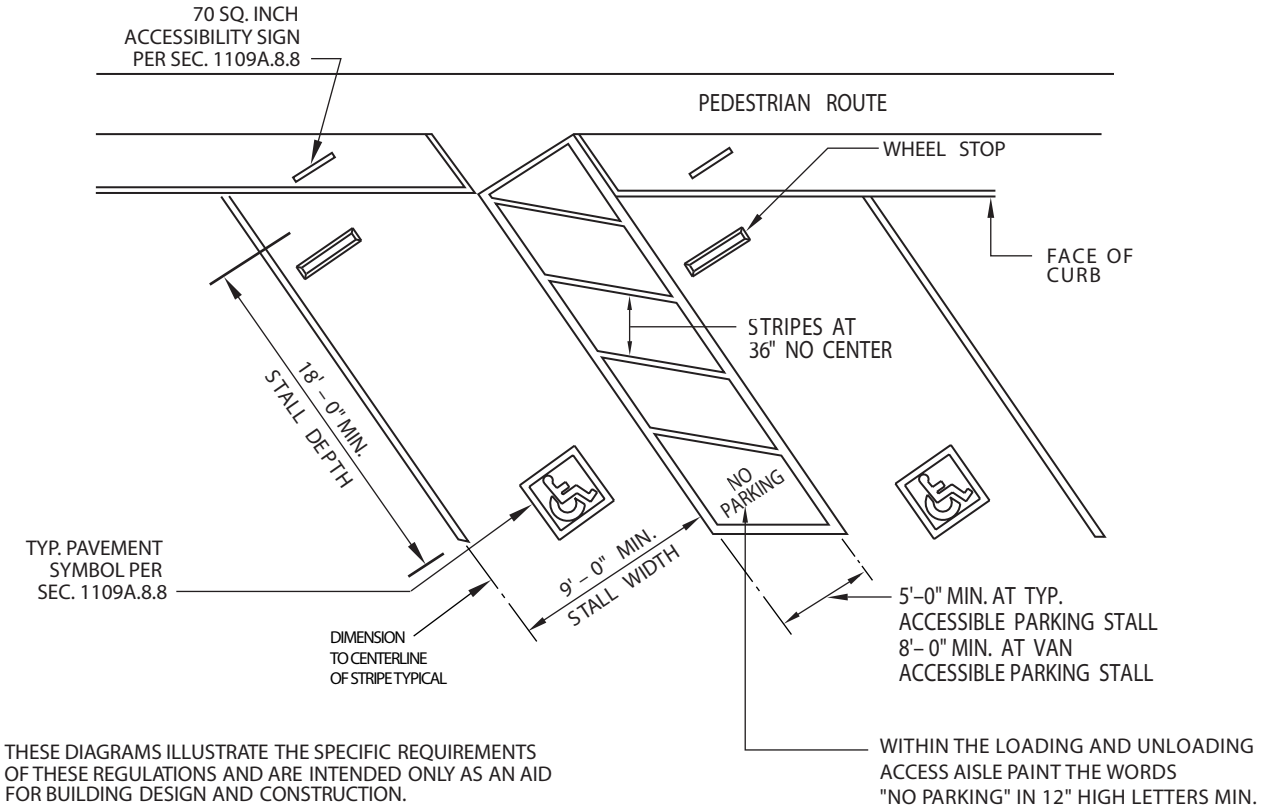

FIGURE 11A-2C—DIAGONAL PARKING STALLS

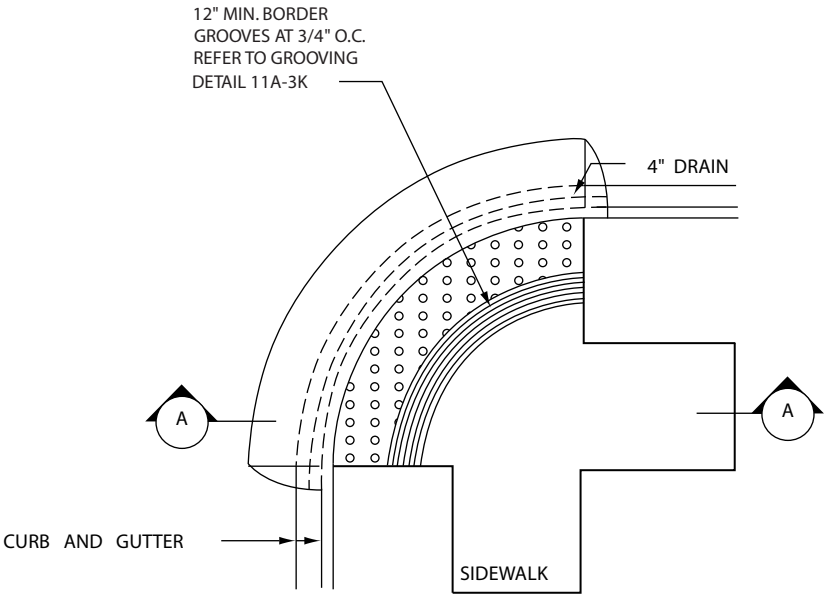

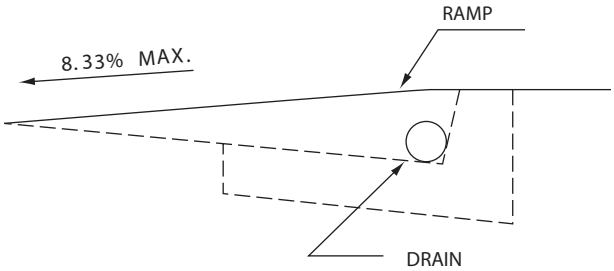

SECTION A–A

THESE DIAGRAMS ILLUSTRATE THE SPECIFIC REQUIREMENTS OF THESE REGULATIONS AND ARE INTENDED ONLY AS AN AID FOR BUILDING DESIGN AND CONSTRUCTION.

FIGURE 11A-3A—CURB DETAILS

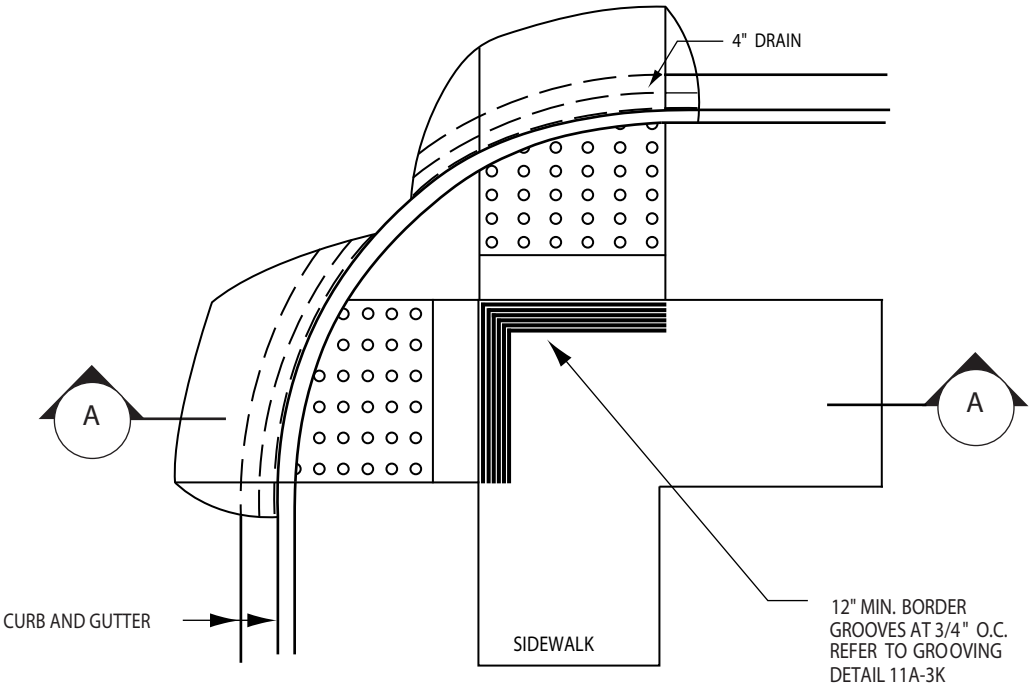

SEE FIGURE 11A-3A

THIS DIAGRAM ILLUSTRATES THE SPECIFIC REQUIREMENTS OF THESE REGULATIONS AND IS INTENDED ONLY AS AN AID FOR BUILDING DESIGN AND CONSTRUCTION.

FIGURE 11A-3B—CURB DETAIL

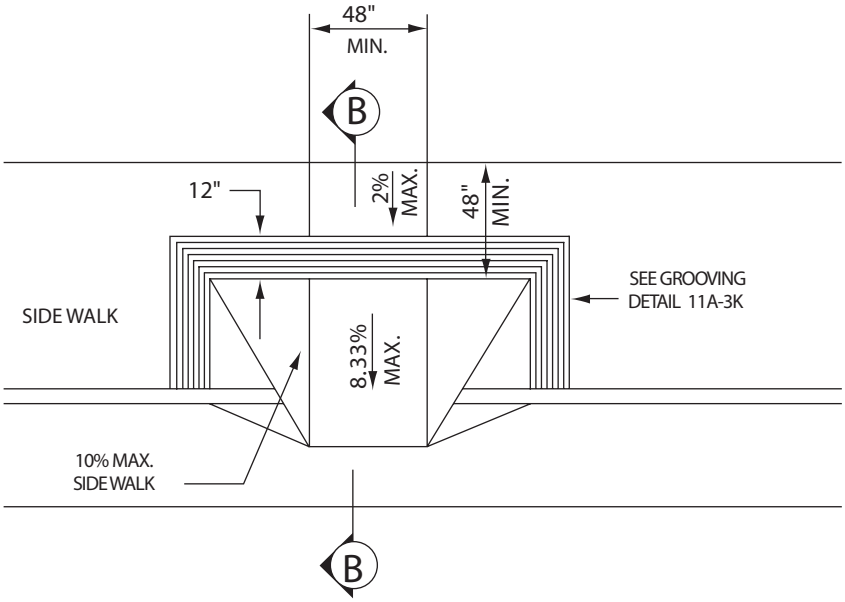

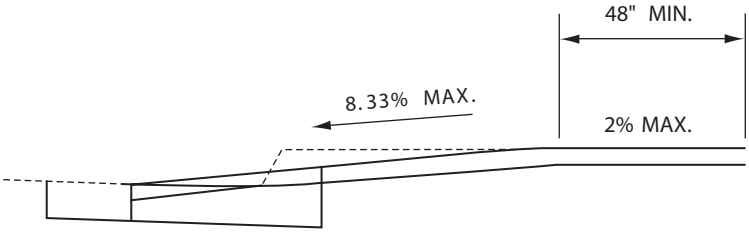

SECTION B–B

THESE DIAGRAMS ILLUSTRATE THE SPECIFIC REQUIREMENTS OF THESE REGULATIONS AND ARE INTENDED ONLY AS AN AID FOR BUILDING DESIGN AND CONSTRUCTION.

FIGURE 11A-3C—CURB DETAIL

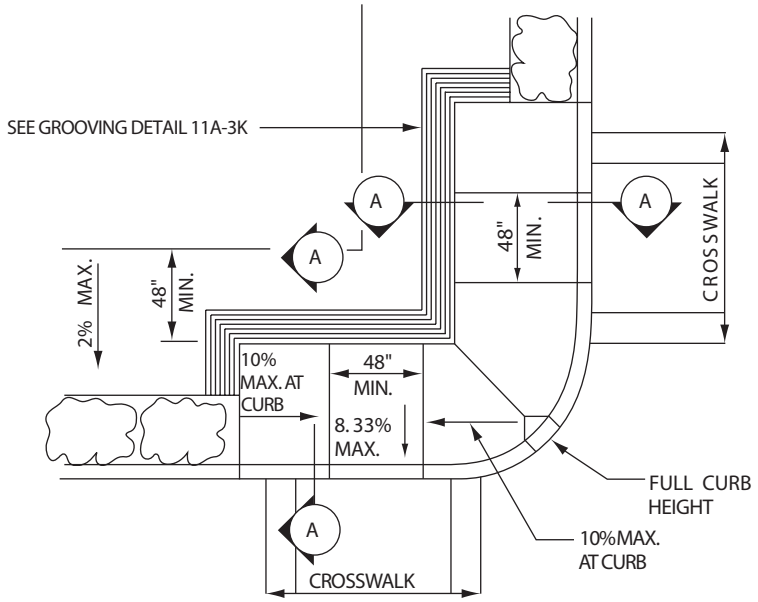

FIGURE 11A-3D—CURB DETAIL

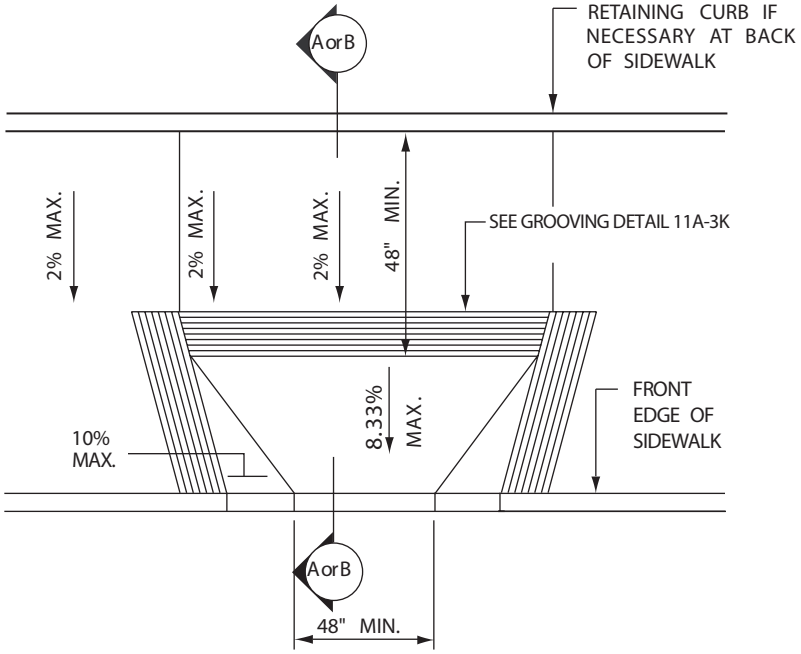

FIGURE 11A-3E—CURB DETAIL

THESE DIAGRAMS ILLUSTRATE THE SPECIFIC REQUIREMENTS OF THESE REGULATIONS AND ARE INTENDED ONLY AS AN AID FOR BUILDING DESIGN AND CONSTRUCTION.

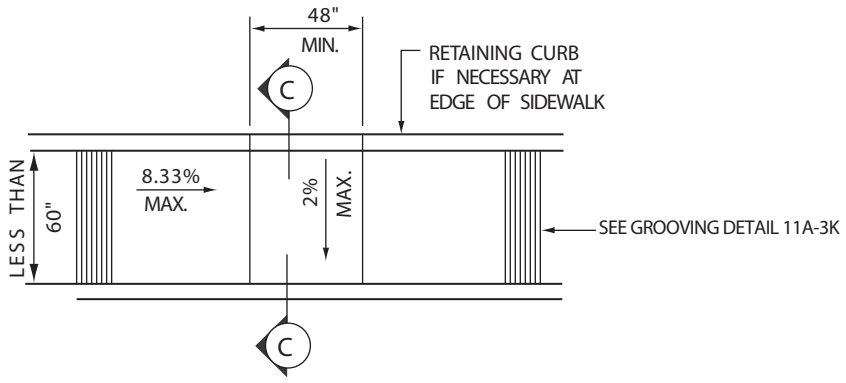

FIGURE 11A-3F—CURB DETAIL

SIDEWALK LESS THAN 60" WIDE

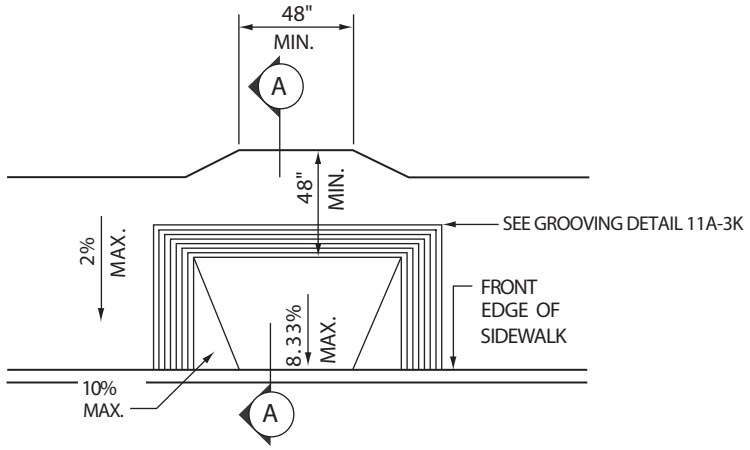

FIGURE 11B-3G—CURB DETAIL

THESE DIAGRAMS ILLUSTRATE THE SPECIFIC REQUIREMENTS OF THESE REGULATIONS AND ARE INTENDED ONLY AS AN AID FOR BUILDING DESIGN AND CONSTRUCTION.

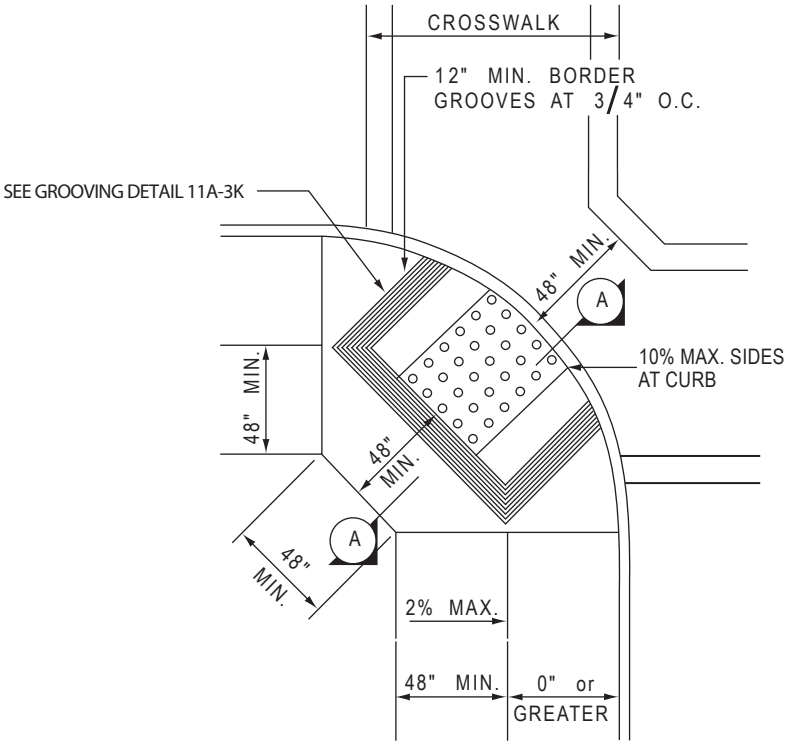

FIGURE 11A-3H—CURB DETAIL

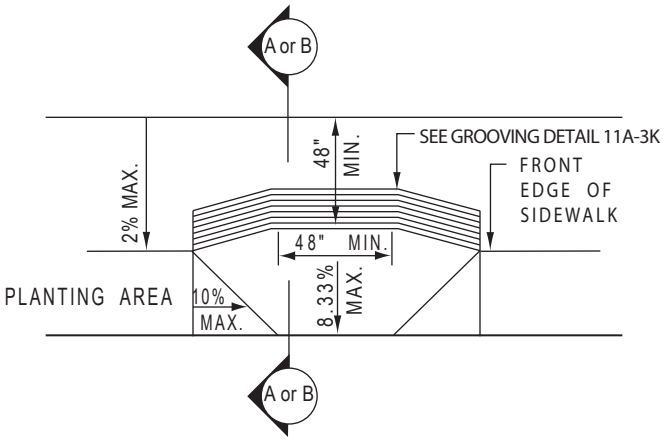

FIGURE 11A-3I—CURB DETAIL

THESE DIAGRAMS ILLUSTRATE THE SPECIFIC REQUIREMENTS OF THESE REGULATIONS AND ARE INTENDED ONLY AS AN AID FOR BUILDING DESIGN AND CONSTRUCTION.

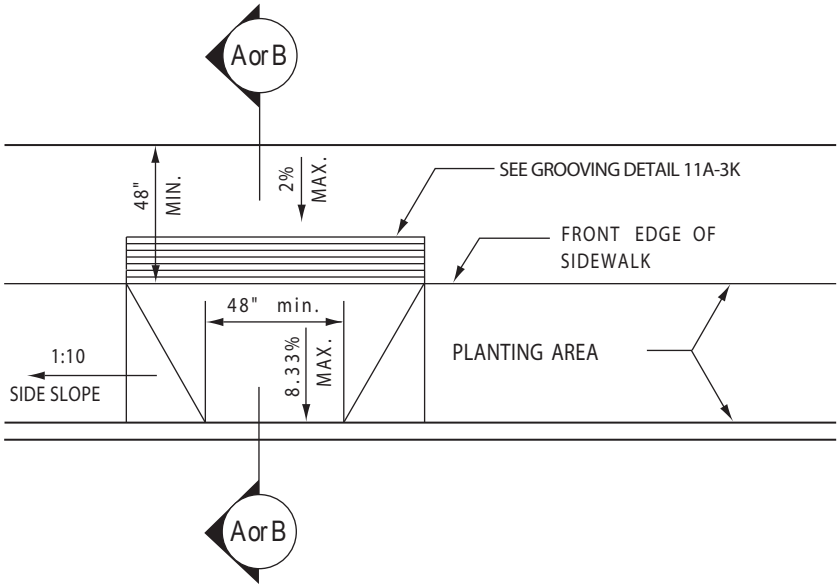

FIGURE 11A-3J—CURB DETAIL

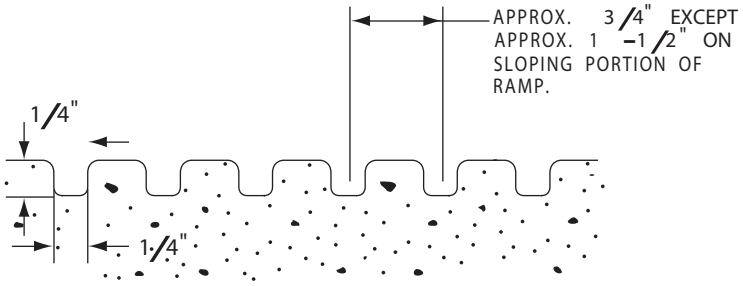

GROOVING DETAIL

FIGURE 11A-3K—CURB DETAIL

THESE DIAGRAMS ILLUSTRATE THE SPECIFIC REQUIREMENTS OF THESE REGULATIONS AND ARE INTENDED ONLY AS AN AID FOR BUILDING DESIGN AND CONSTRUCTION.

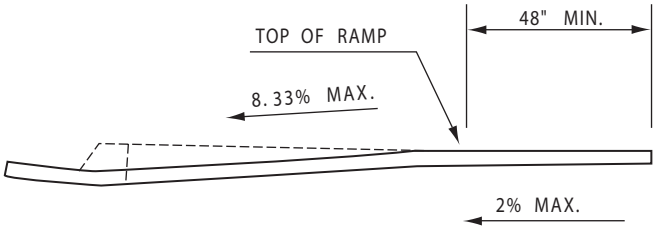

SECTION A–A

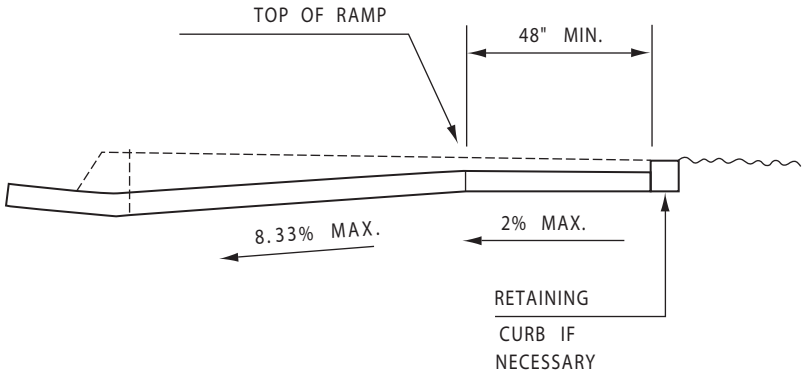

SECTION B–B

DEPRESS ENTIRE SIDEWALK AS REQUIRED

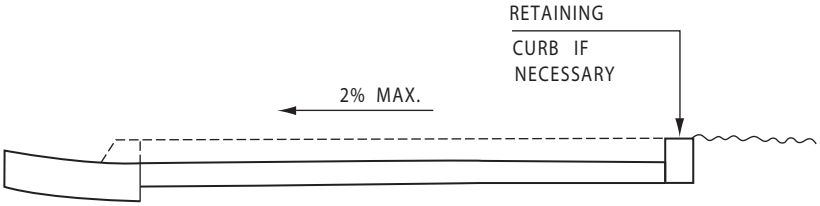

SECTION C–C

THESE DIAGRAMS ILLUSTRATE THE SPECIFIC REQUIREMENTS OF THESE REGULATIONS AND ARE INTENDED ONLY AS AN AID FOR BUILDING DESIGN AND CONSTRUCTION.

FIGURE 11A-3L—CURB SECTIONS

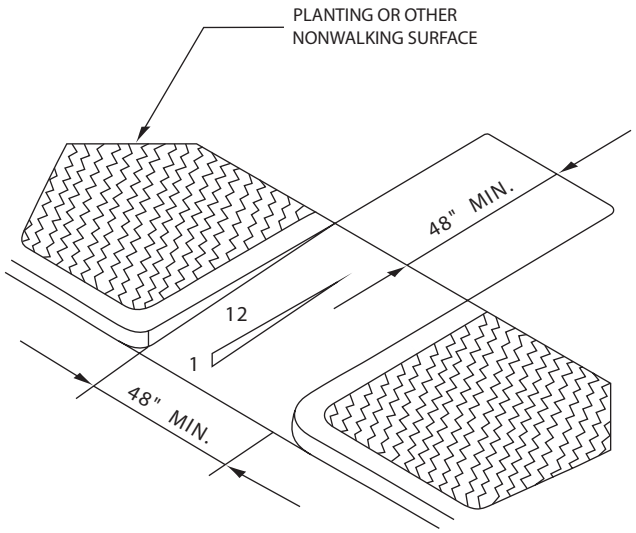

(a)

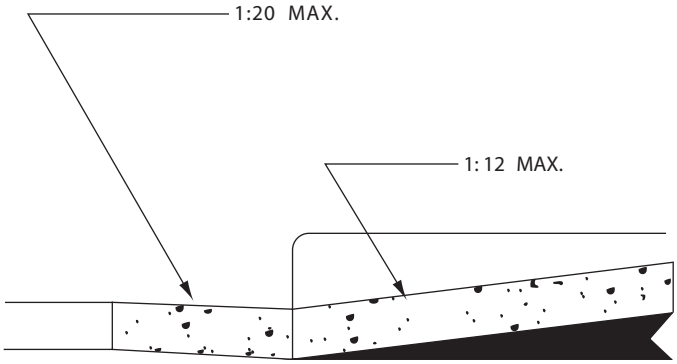

(b)

THESE DIAGRAMS ILLUSTRATE THE SPECIFIC REQUIREMENTS OF THESE REGULATIONS AND ARE INTENDED ONLY AS AN AID FOR BUILDING DESIGN AND CONSTRUCTION.

FIGURE 11A-3M—RETURNED CURB STYLE

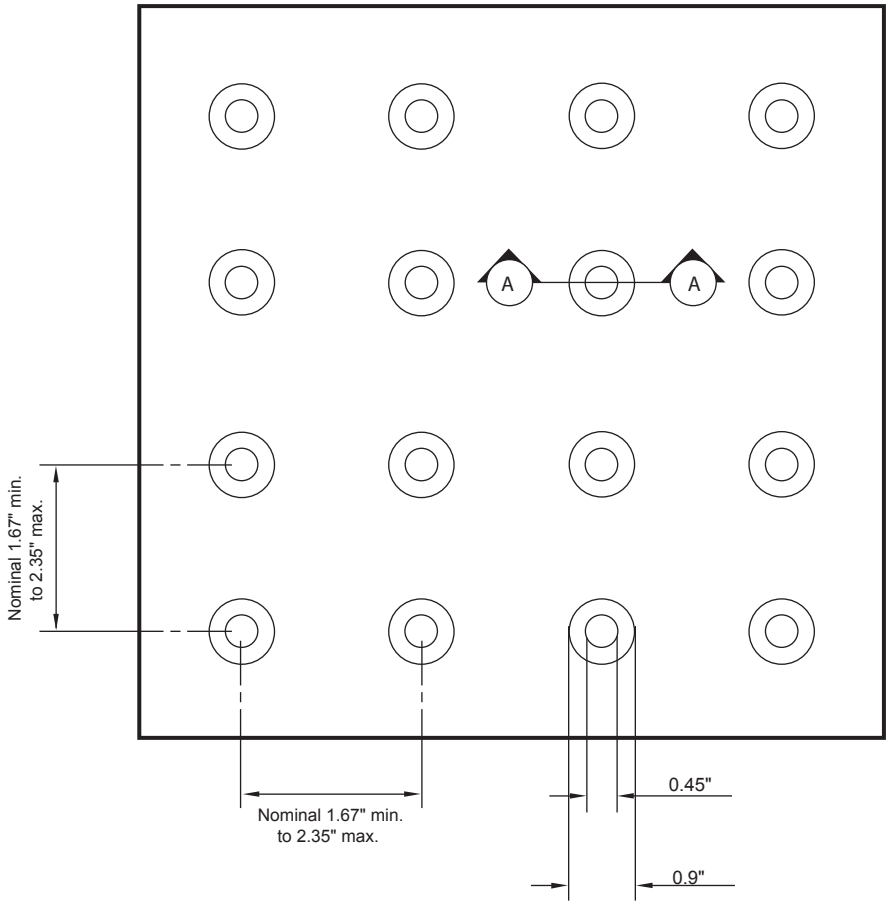

TYPICAL PLAN

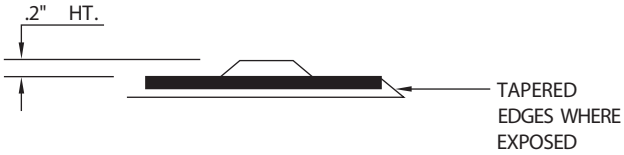

TYPICAL SECTION A-A

THESE DIAGRAMS ILLUSTRATE THE SPECIFIC REQUIREMENTS OF THESE REGULATIONS AND ARE INTENDED ONLY AS AN AID FOR BUILDING DESIGN AND CONSTRUCTION.

FIGURE 11A-3N—TRUNCATED DOMES

FIGURE 11A-4—RESERVED

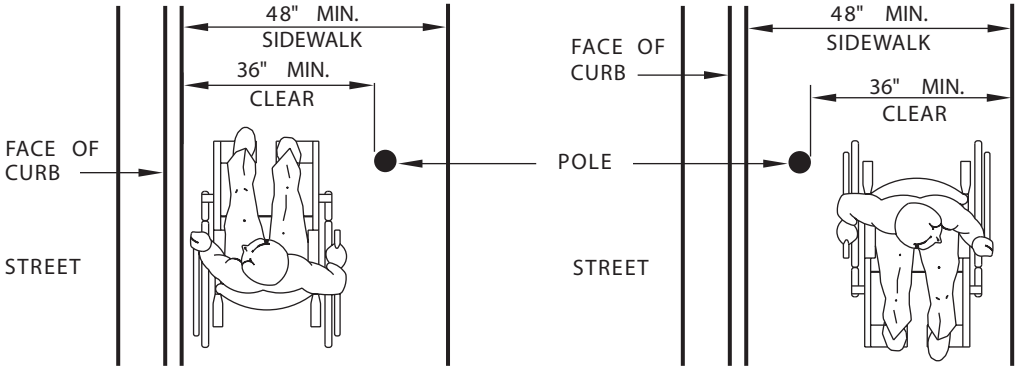

(a) SIDEWALK OBSTRUCTIONS

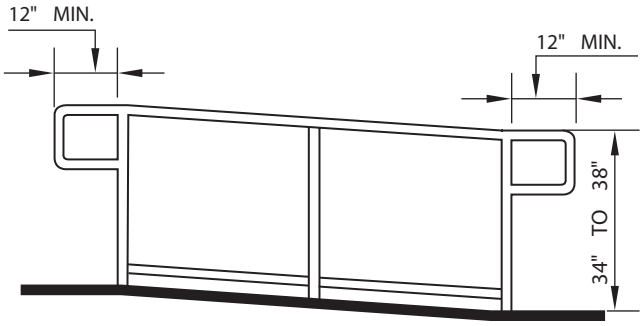

(b) GUIDE RAIL

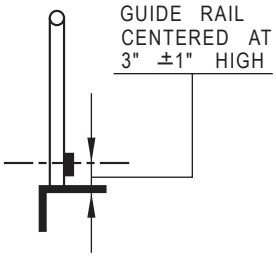

GUIDE RAIL DETAIL

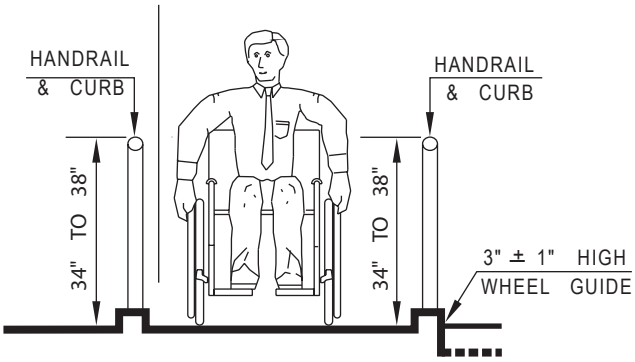

(c) WHEEL GUIDE

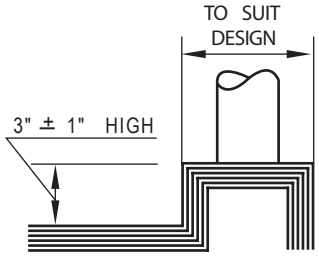

WHEEL GUIDE DETAIL

THESE DIAGRAMS ILLUSTRATE THE SPECIFIC REQUIREMENTS OF THESE REGULATIONS AND ARE INTENDED ONLY AS AN AID FOR BUILDING DESIGN AND CONSTRUCTION.

FIGURE 11A-5A—RAMPS AND SIDEWALKS

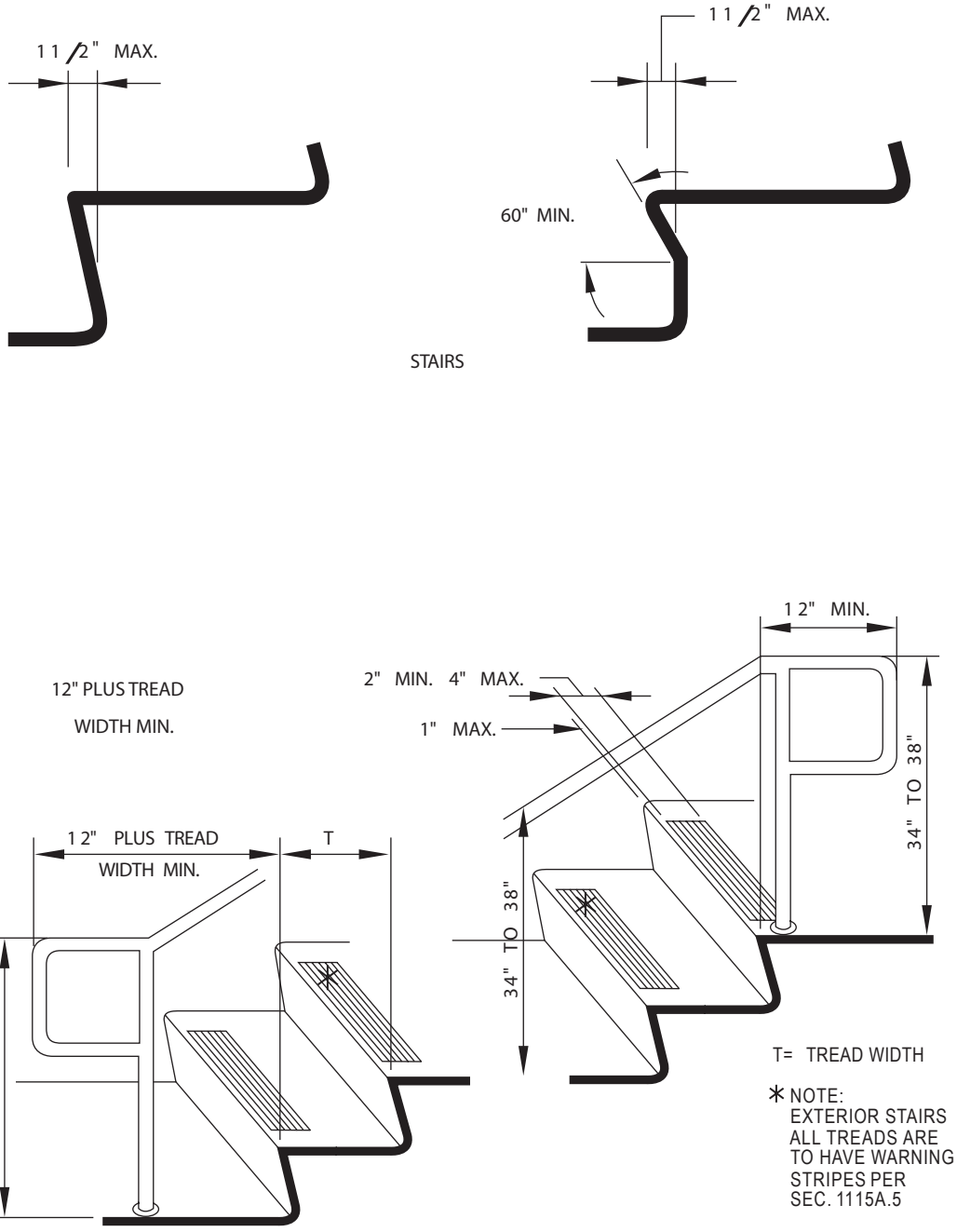

THESE DIAGRAMS ILLUSTRATE THE SPECIFIC REQUIREMENTS OF THESE REGULATIONS AND ARE INTENDED ONLY AS AN AID FOR BUILDING DESIGN AND CONSTRUCTION.

FIGURE 11A-6A—WARNING STRIPING AND HANDRAIL EXTENSIONS

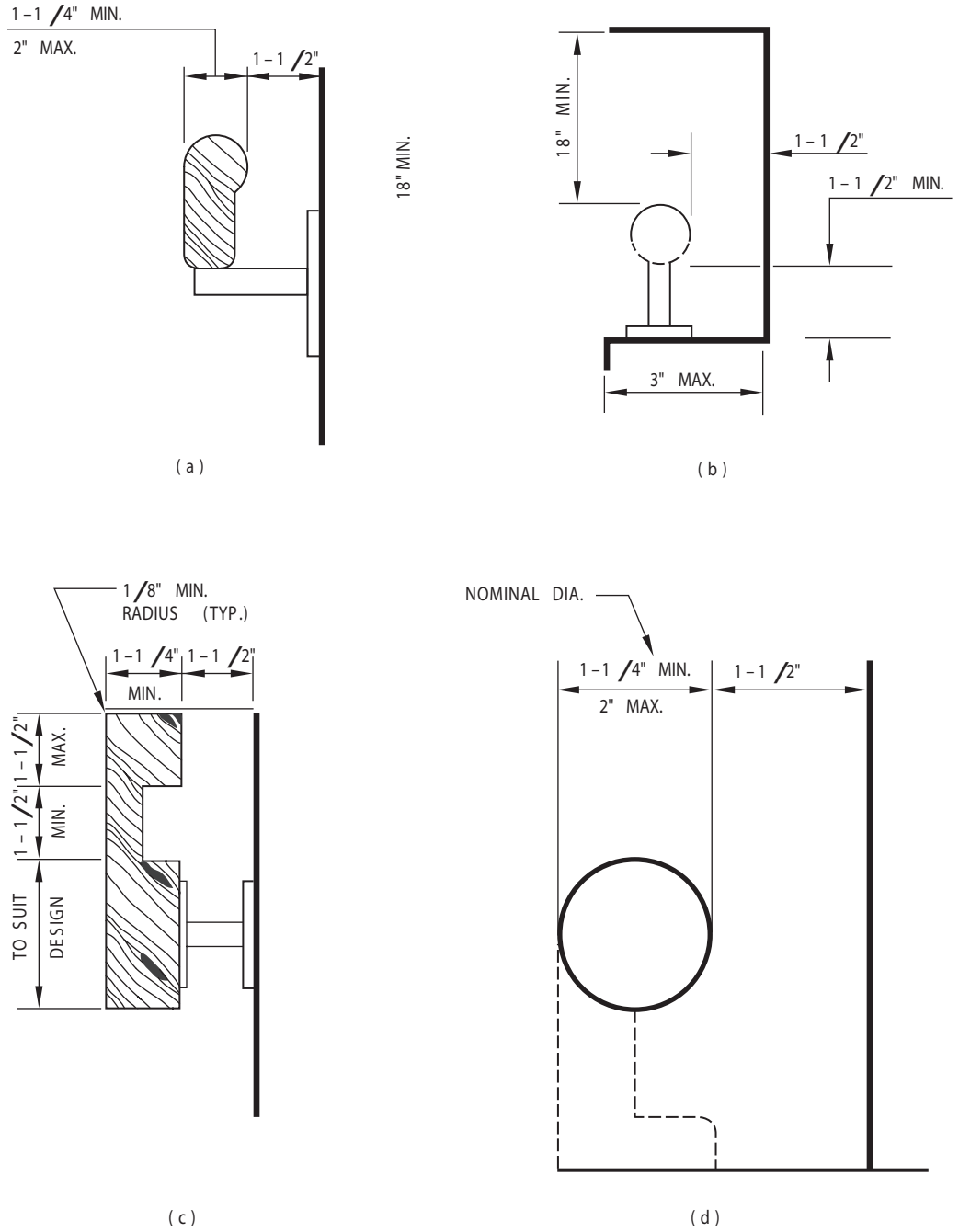

THESE DIAGRAMS ILLUSTRATE THE SPECIFIC REQUIREMENTS OF THESE REGULATIONS AND ARE INTENDED ONLY AS AN AID FOR BUILDING DESIGN AND CONSTRUCTION.

FIGURE 11A-6B—STAIR HANDRAILS

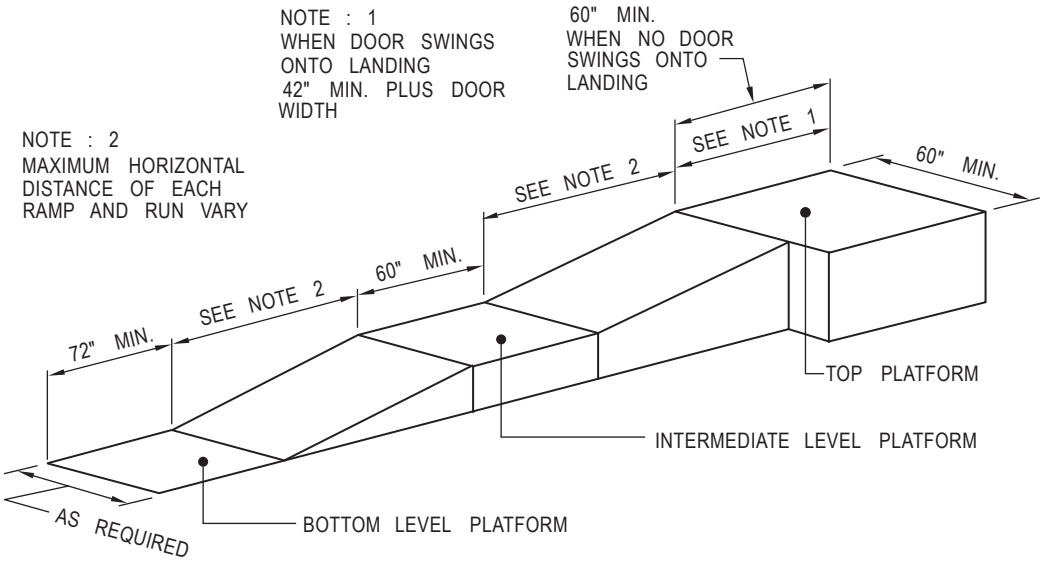

(a) STRAIGHT RAMP RUN

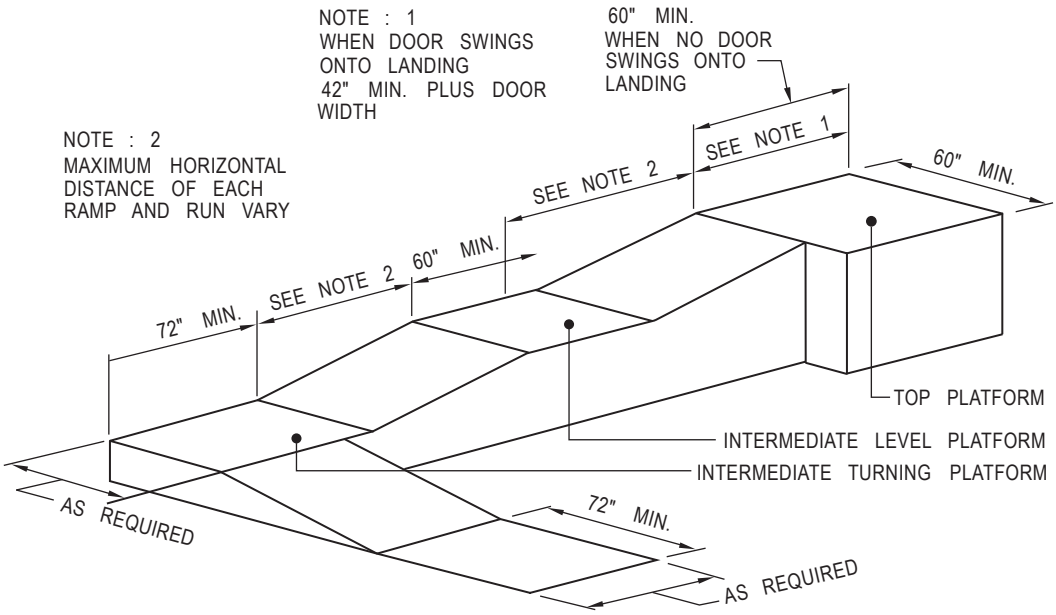

(b) RAMP WITH TURNING PLATFORM

THESE DIAGRAMS ILLUSTRATE THE SPECIFIC REQUIREMENTS OF THESE REGULATIONS AND ARE INTENDED ONLY AS AN AID FOR BUILDING DESIGN AND CONSTRUCTION.

FIGURE 11A-6C—RAMP DIMENSIONS

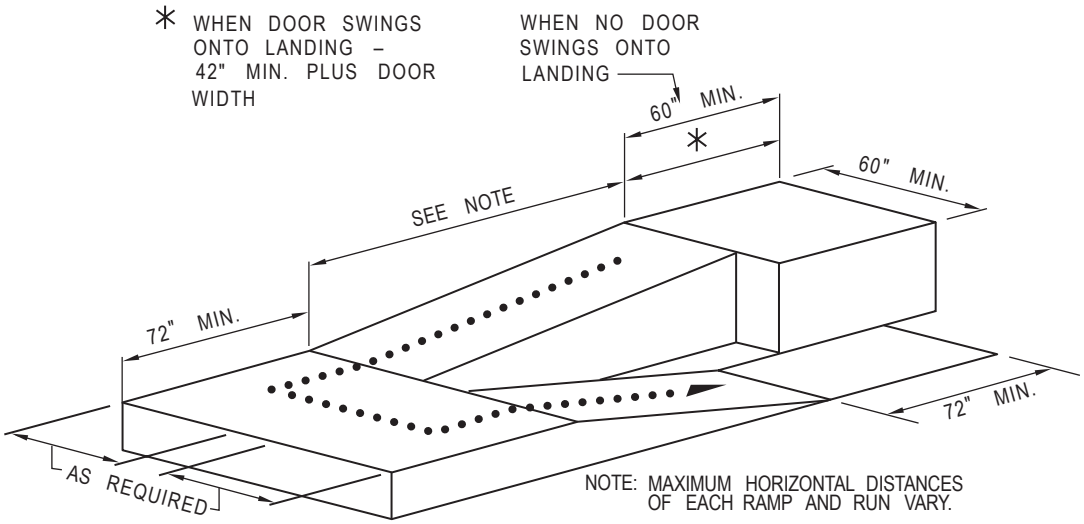

(a) RAMP WITH INTERMEDIATE SWITCH BACK PLATFORM

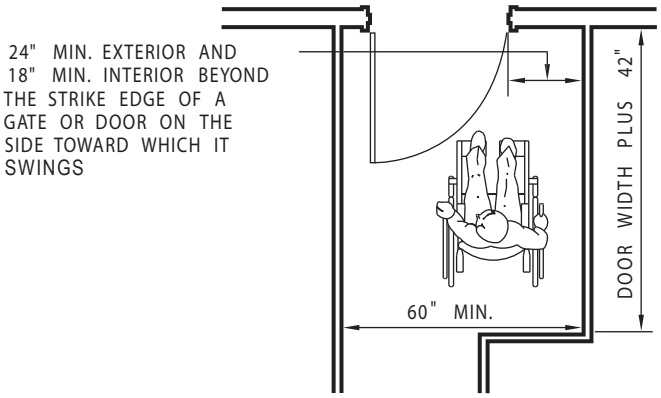

(b) RAMP LANDING AT DOORWAY

THESE DIAGRAMS ILLUSTRATE THE SPECIFIC REQUIREMENTS OF THESE REGULATIONS AND ARE INTENDED ONLY AS AN AID FOR BUILDING DESIGN AND CONSTRUCTION.

FIGURE 11A-6D—RAMP LANDING AND DOORWAY

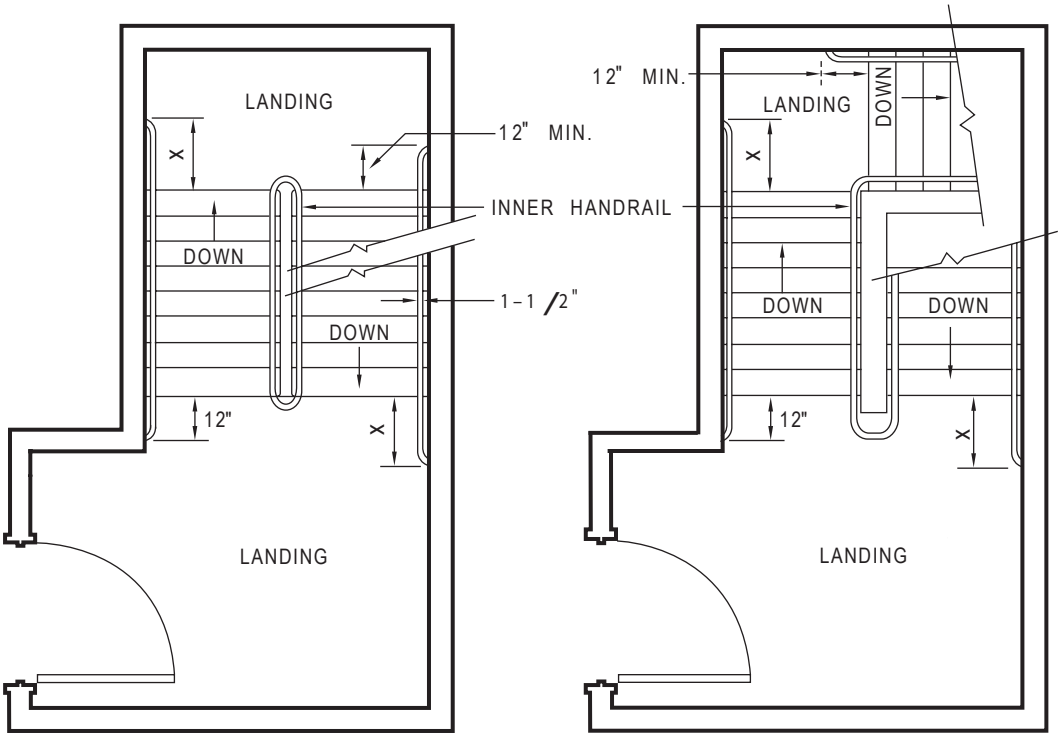

NOTE : INNER HANDRAIL AT LANDINGS OF STAIRS THAT DOUBLE BACK OR IMMEDIATELY TURN SHALL BE CONTINUOUS AND SHALL NOT EXTEND INTO LANDING OR PATH OF TRAVEL.

X : EXTENSION OF HANDRAIL SHALL BE EQUAL TO THE TREAD WIDTH PLUS 12 INCHES.

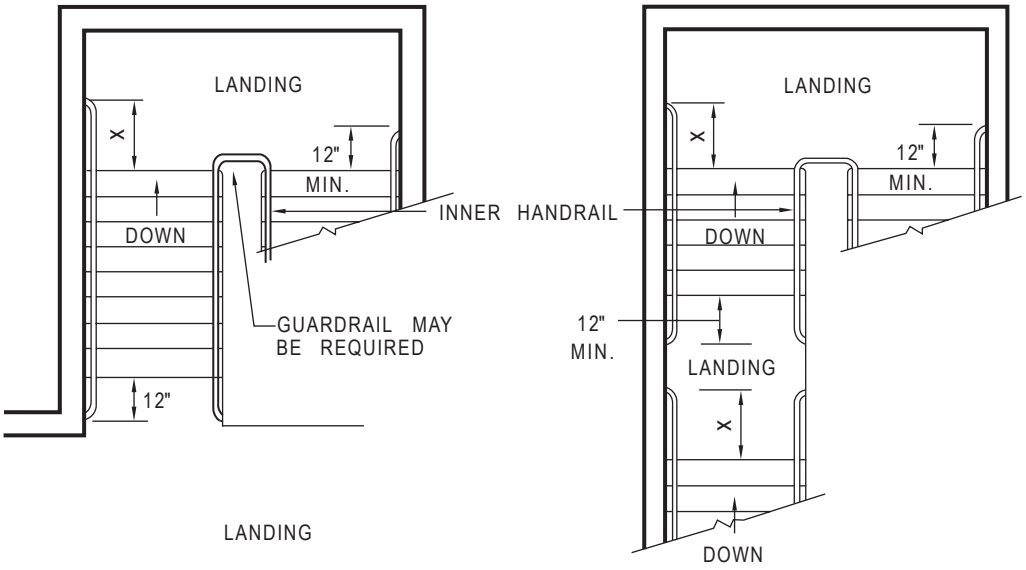

THESE DIAGRAMS ILLUSTRATE THE SPECIFIC REQUIREMENTS OF THESE REGULATIONS AND ARE INTENDED ONLY AS AN AID FOR BUILDING DESIGN AND CONSTRUCTION.

FIGURE 11A-6E—STAIR HANDRAILS

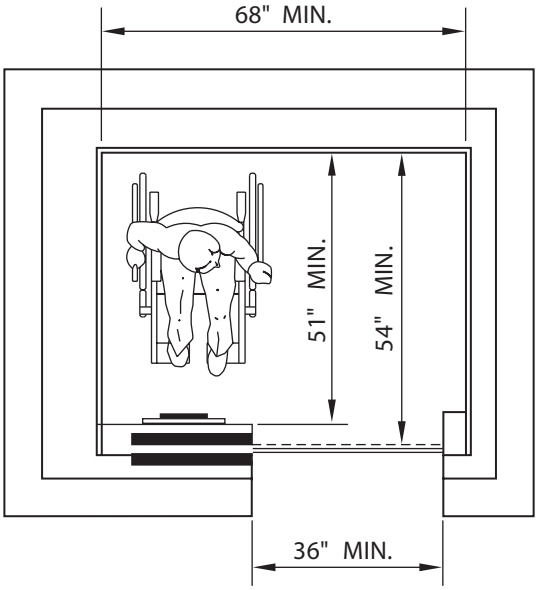

(a) SIDE OPENING DOOR

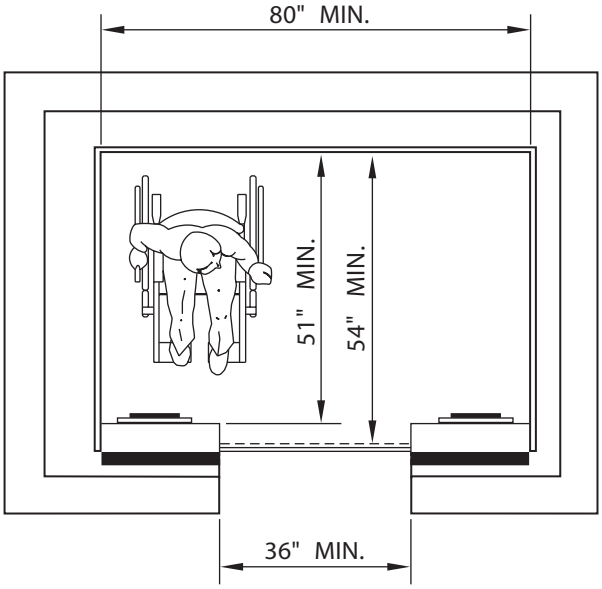

(b) CENTER OPENING DOOR

THIS DIAGRAM ILLUSTRATES THE SPECIFIC REQUIREMENTS OF THESE REGULATIONS AND IS INTENDED ONLY AS AN AID FOR BUILDING DESIGN AND CONSTRUCTION

FIGURE 11A-7A—MINIMUM DIMENSIONS OF ELEVATOR CARS

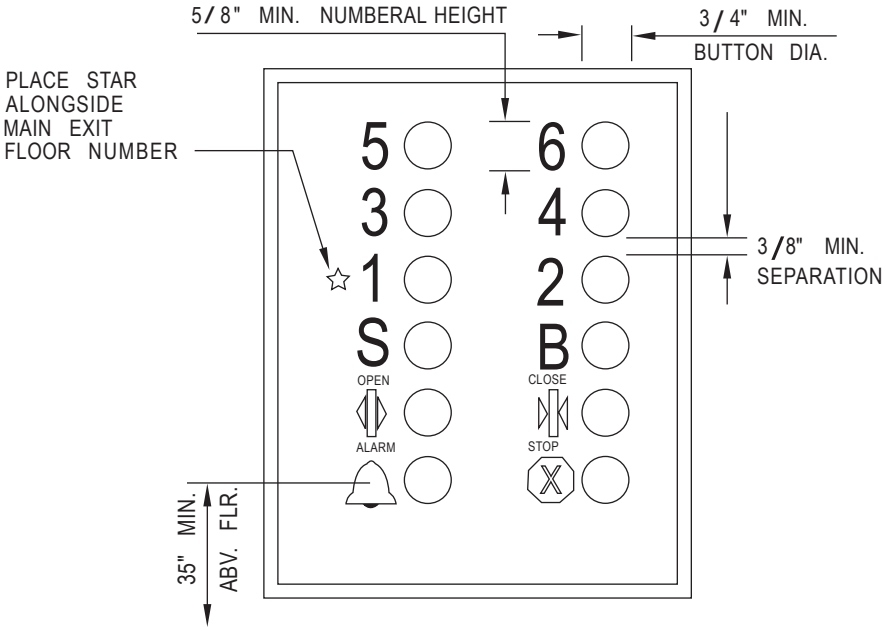

(a) ELEVATOR CONTROL PANEL DETAIL

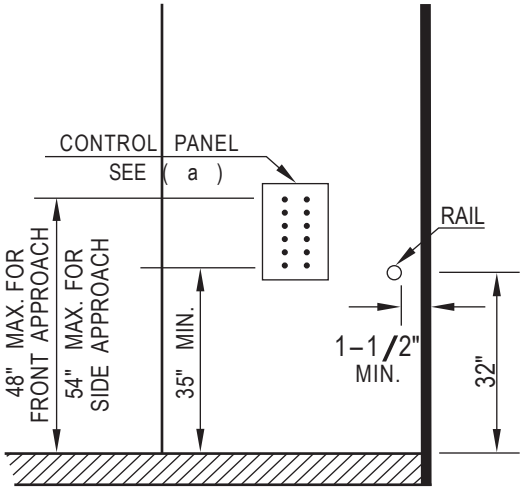

(b) MAXIMUM INSTALLATION HEIGHTS ABOVE CAB FLOOR

THIS DIAGRAM ILLUSTRATES THE SPECIFIC REQUIREMENTS OF THESE REGULATIONS AND IS INTENDED ONLY AS AN AID FOR BUILDING DESIGN AND CONSTRUCTION.

FIGURE 11A-7B—ELEVATOR CONTROL PANEL

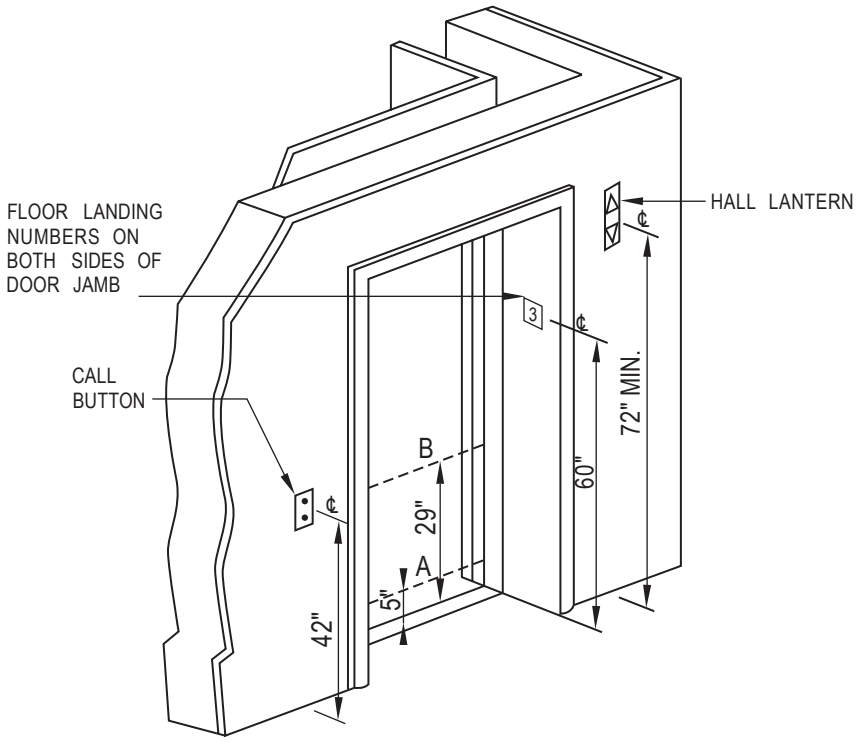

NOTE:
THE AUTOMATIC DOOR REOPENING DEVICE IS ACTIVATED IF AN OBJECT PASSES THROUGH EITHER LINE A OR LINE B. LINE A AND LINE B REPRESENT THE VERTICAL LOCATION OF THE DOOR REOPENING DEVICE NOT REQUIRING CONTACT.

FIGURE 11A-7C—HOISTWAY AND ELEVATOR ENTRANCES

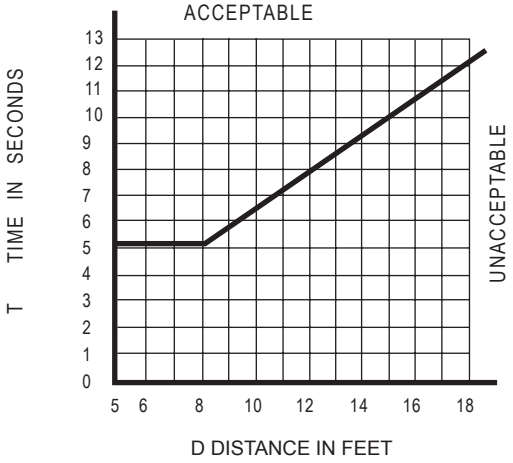

THIS DIAGRAM ILLUSTRATES THE SPECIFIC REQUIREMENTS OF THESE REGULATIONS AND IS INTENDED ONLY AS AN AID FOR BUILDING DESIGN AND CONSTRUCTION.

FIGURE 11A-7D—GRAPH OF TIMING EQUATION

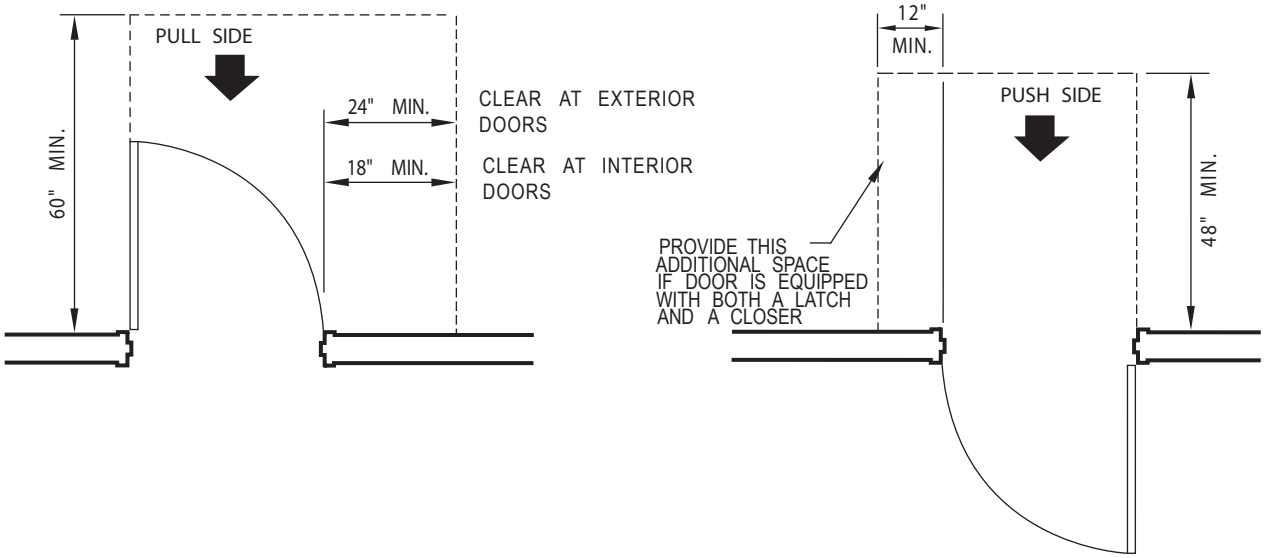

FIGURE 11A-8A—FRONT APPROACHES - SWINGING DOORS

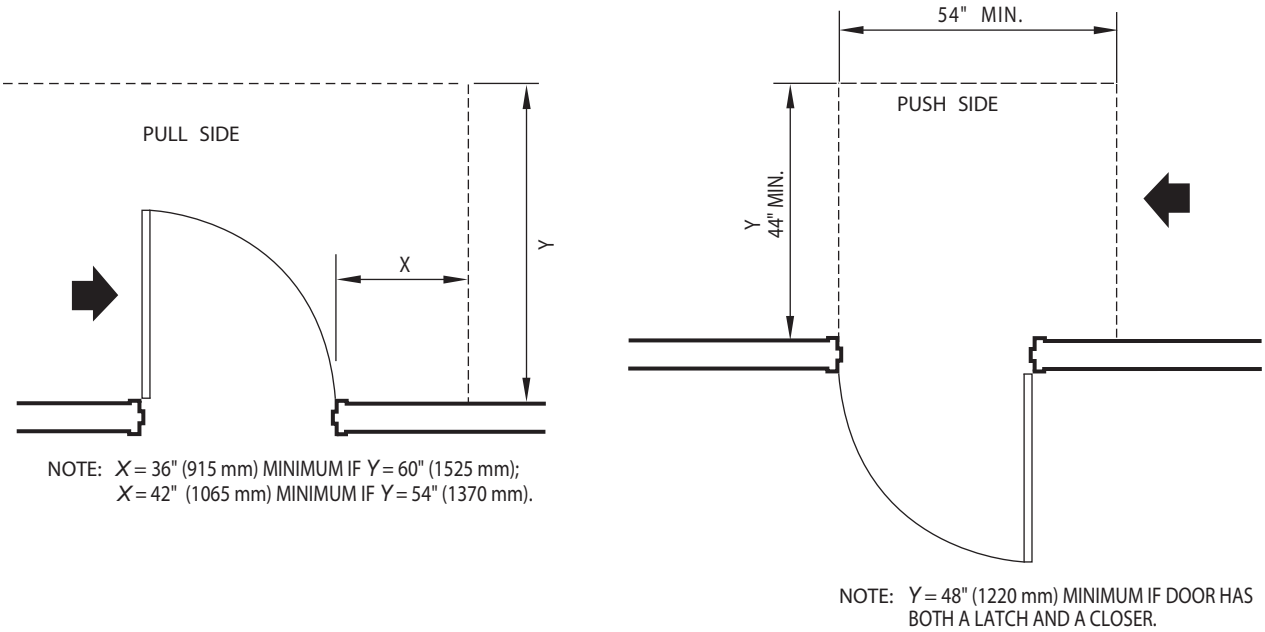

FIGURE 11A-8B—HINGE SIDE APPROACHES - SWINING DOORS

THESE DIAGRAMS ILLUSTRATE THE SPECIFIC REQUIREMENTS OF THESE REGULATIONS AND ARE INTENDED ONLY AS AN AID FOR BUILDING DESIGN AND CONSTRUCTION.

LEVEL MANEUVERING CLEARANCE AT DOORS

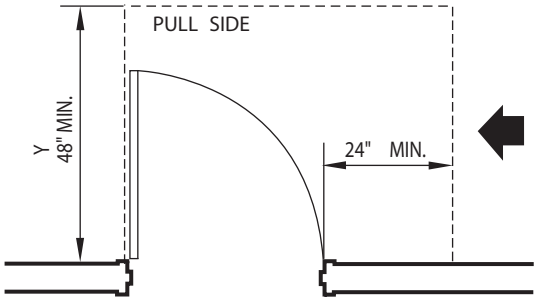

NOTE: Y = 54" (1370 mm) MINIMUM IF DOOR HAS A CLOSER.

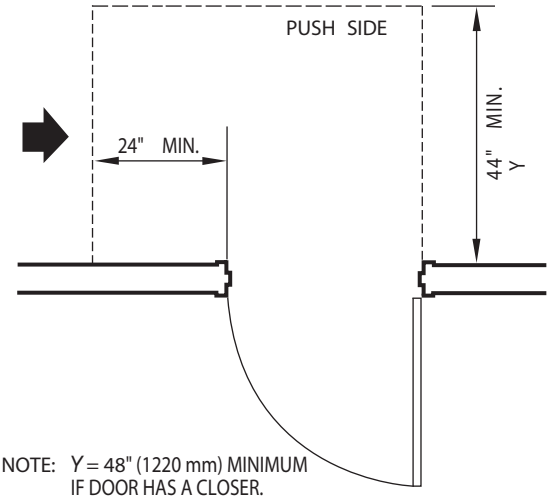

NOTE: Y = 48" (1220 mm) MINIMUM IF DOOR HAS A CLOSER.

FIGURE 11A-8C—LATCH SIDE APPROACHES - SWINGING DOORS

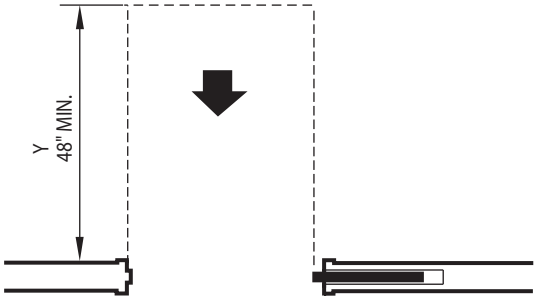

FIGURE 11A-8D—FRONT APPROACH - SLIDING DOORS AND FOLDING DOORS

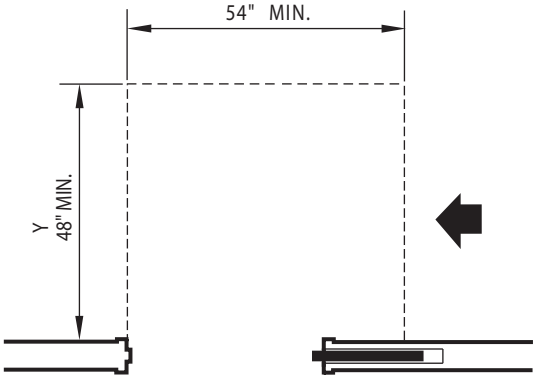

FIGURE 11A-8E—SLIDE-SIDE APPROACH - SLIDING DOORS AND FOLDING DOORS

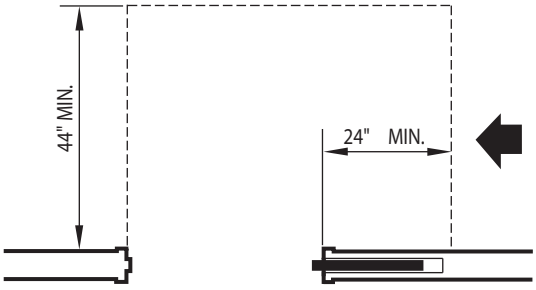

FIGURE 11A-8F—LATCH-SIDE APPROACH - SLIDING DOORS AND FOLDING DOORS

THESE DIAGRAMS ILLUSTRATE THE SPECIFIC REQUIREMENTS OF THESE REGULATIONS AND ARE INTENDED ONLY AS AN AID FOR BUILDING DESIGN AND CONSTRUCTION.

LEVEL MANEUVERING CLEARANCE AT DOORS (Continued)

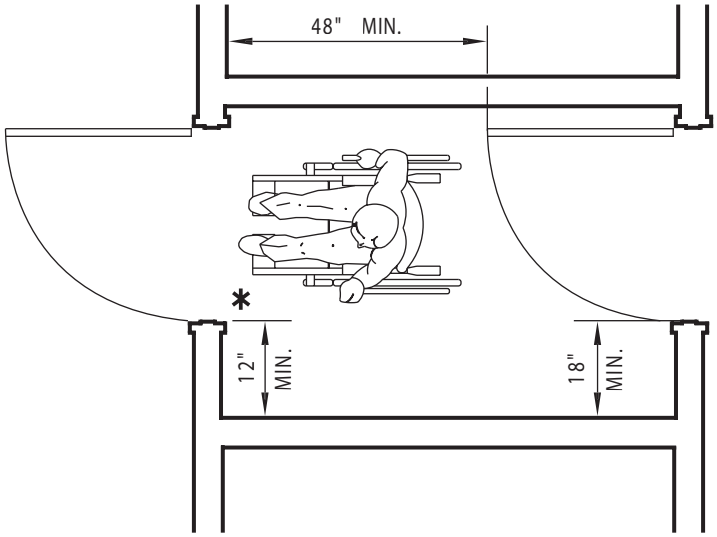

(a) DOOR IN SERIES

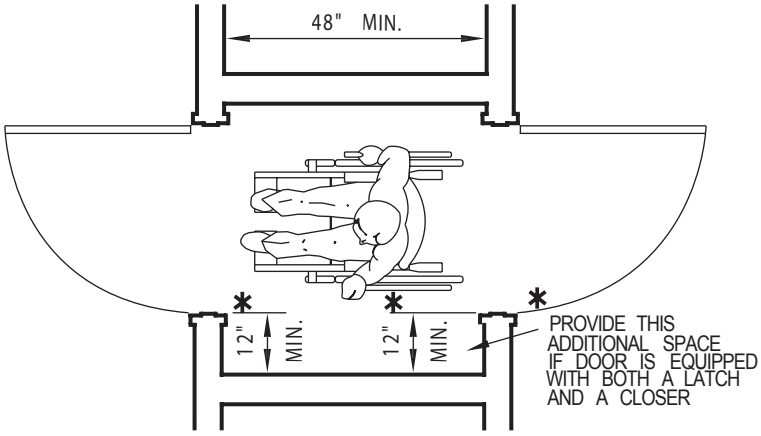

(b) BOTH DOORS OPEN OUT

(SERVING OTHER THAN A REQUIRED EXIT STAIRWAY)

THESE DIAGRAMS ILLUSTRATE THE SPECIFIC REQUIREMENTS OF THESE REGULATIONS AND ARE INTENDED ONLY AS AN AID FOR BUILDING DESIGN AND CONSTRUCTION.

FIGURE 11A-8G—VESTIBULE

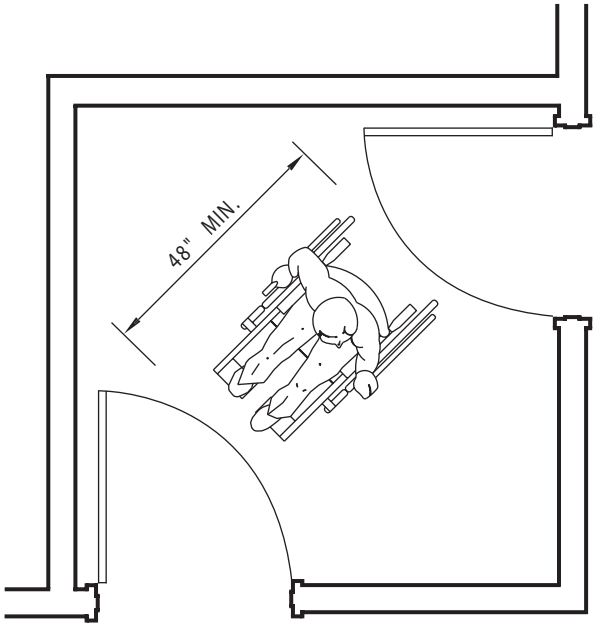

(a) DOORS AT ADJACENT WALLS

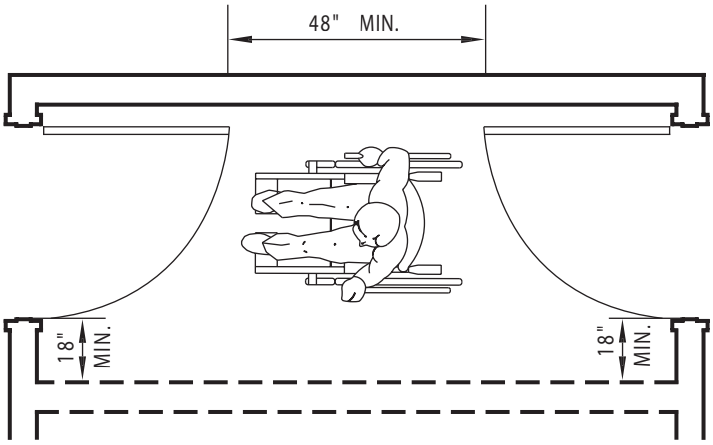

(b) DOORS AT OPPOSITE WALLS

THESE DIAGRAMS ILLUSTRATE THE SPECIFIC REQUIREMENTS OF THESE REGULATIONS AND ARE INTENDED ONLY AS AN AID FOR BUILDING DESIGN AND CONSTRUCTION.

FIGURE 11A-8H—VESTIBULE
(SERVING OTHER THAN A REQUIRED EXIT STAIRWAY)

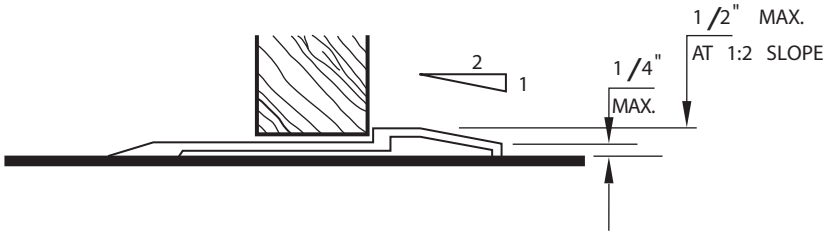

THESE DIAGRAMS ILLUSTRATE THE SPECIFIC REQUIREMENTS OF THESE REGULATIONS AND ARE INTENDED ONLY AS AN AID FOR BUILDING DESIGN AND CONSTRUCTION.

FIGURE 11A-8I—THRESHOLDS

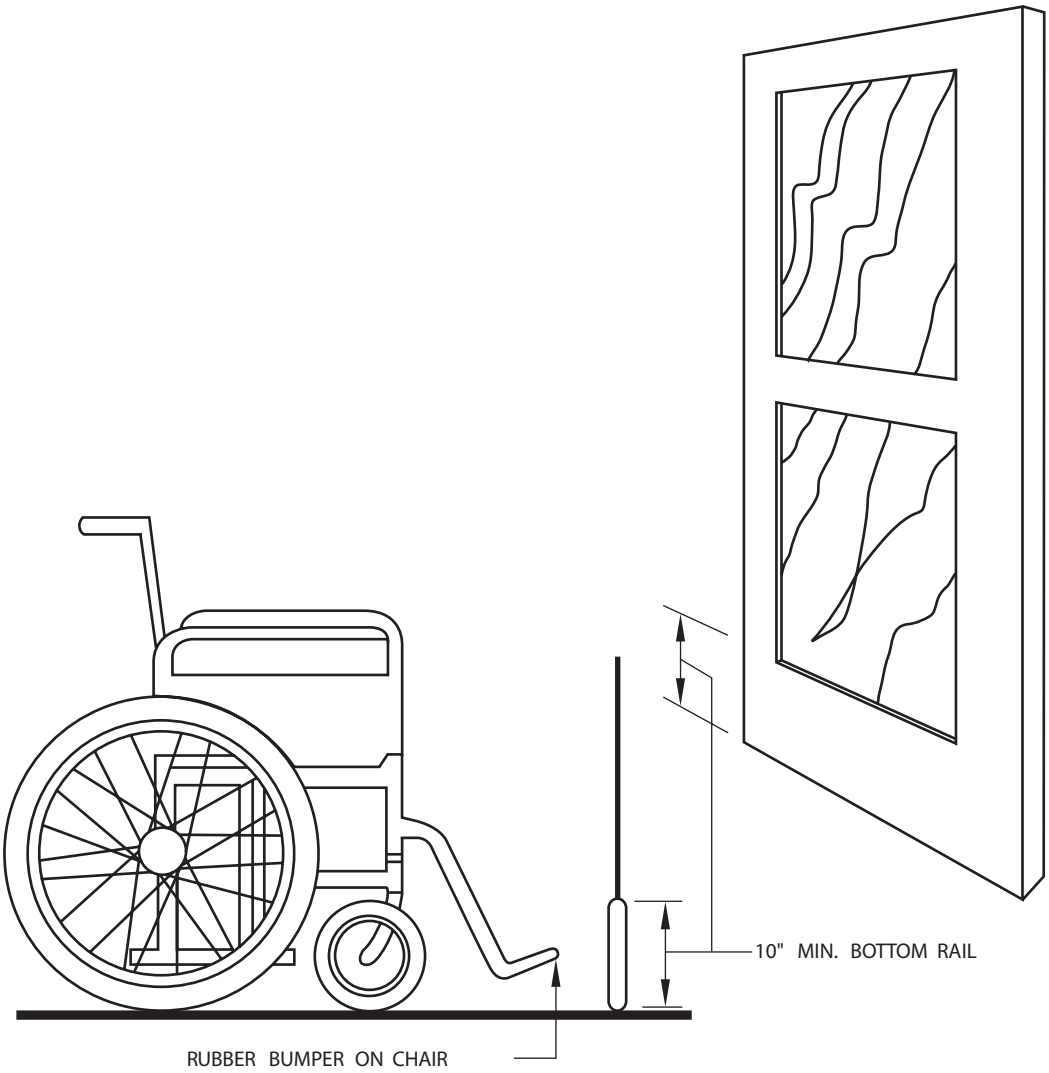

THIS DIAGRAM ILLUSTRATES THE SPECIFIC REQUIREMENTS OF THESE REGULATIONS AND IS INTENDED ONLY AS AN AID FOR BUILDING DESIGN AND CONSTRUCTION.

FIGURE 11A-8J—DOOR CONSTRUCTION

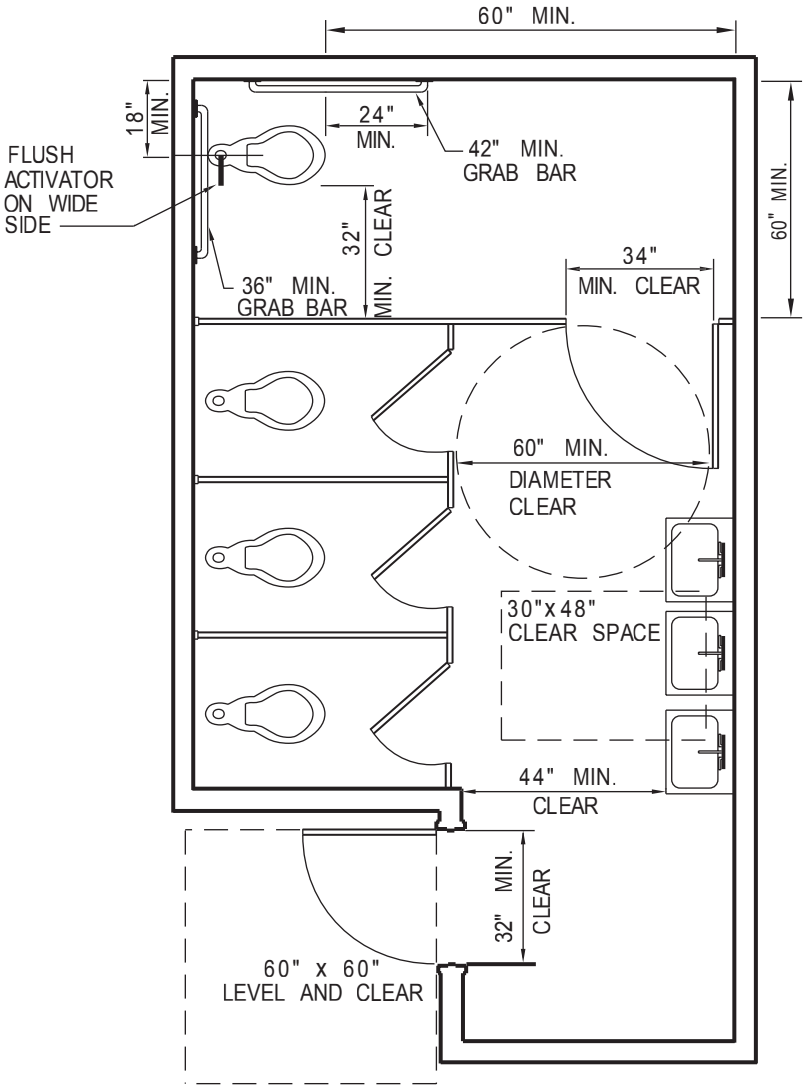

THIS DIAGRAM ILLUSTRATES THE SPECIFIC REQUIREMENTS OF THESE REGULATIONS AND IS INTENDED ONLY AS AN AID FOR BUILDING DESIGN AND CONSTRUCTION.

FIGURE 11A-9A—MULTIPLE-ACCOMMODATION TOILET FACILITY

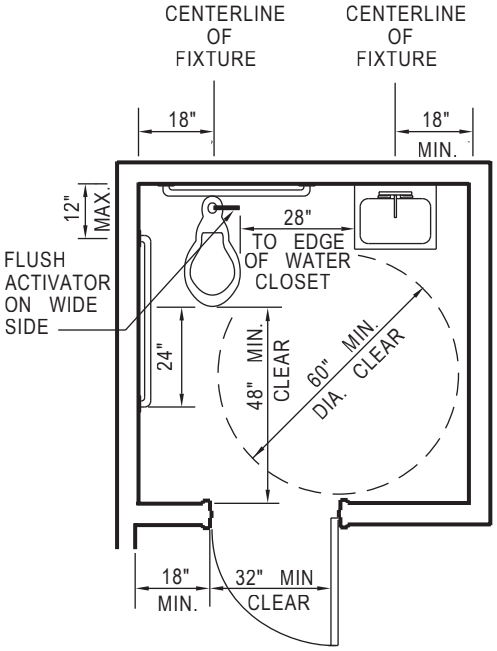

SINGLE-ACCOMMODATION TOILET FACILITY

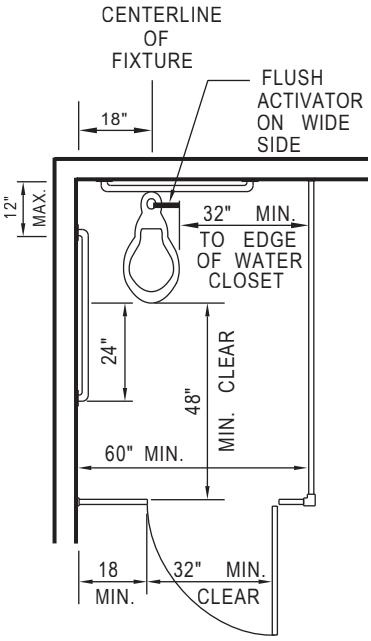

ACCESSINLE WATER CLOSET COMPARTMENT
WITHIN A MULTIPLE-ACCOMMODATION TOILET FACILITY

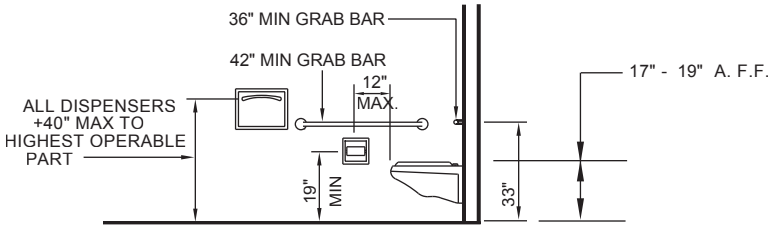

SIDE ELEVATION

THESE DIAGRAMS ILLUSTRATE THE SPECIFIC REQUIREMENTS
OF THESE REGULATIONS AND ARE INTENDED ONLY AS AN AID
FOR BUILDING DESIGN AND CONSTRUCTION

FIGURE 11A-9B

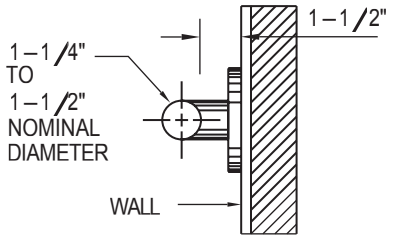

SECTION THROUGH TYPICAL GRAB BAR

THESE DIAGRAMS ILLUSTRATE THE SPECIFIC REQUIREMENTS OF THESE REGULATIONS AND ARE INTENDED ONLY AS AN AID FOR BUILDING DESIGN AND CONSTRUCTION

FIGURE 11A-9C—GRAB BAR SECTION

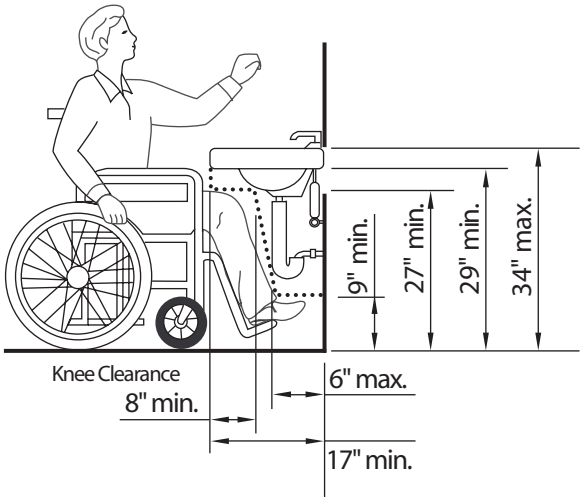

SIDE ELEVATION

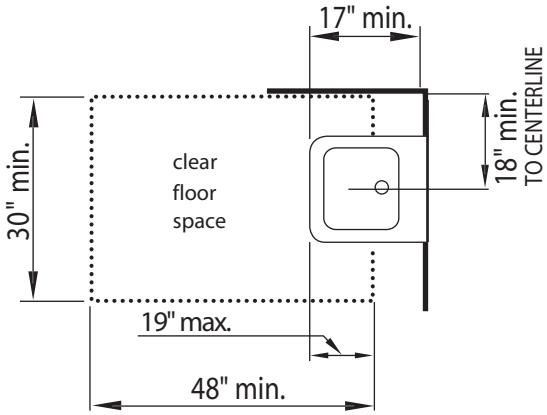

PLAN VIEW

THIS DIAGRAM ILLUSTRATES THE SPECIFIC REQUIREMENTS OF THESE REGULATIONS AND IS INTENDED ONLY AS AN AID FOR BUILDING DESIGN AND CONSTRUCTION.

FIGURE 11A-9D—KNEE CLEARANCE

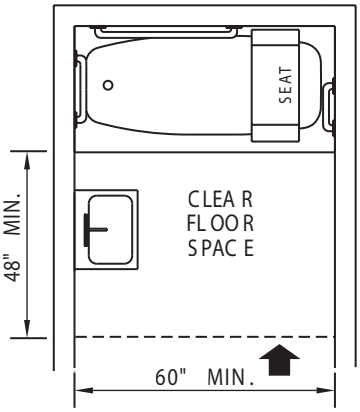

(a) WITH SEAT IN TUB

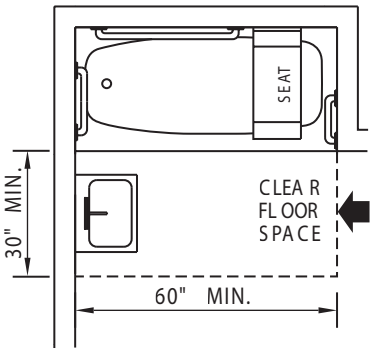

(b) WITH SEAT IN TUB

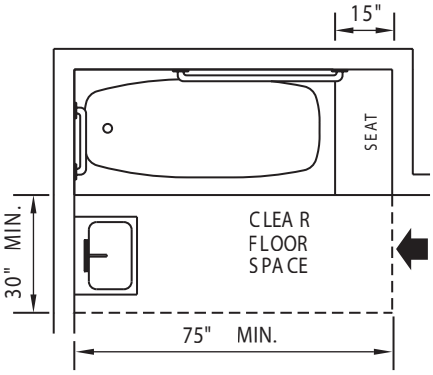

(c) WITH SEAT AT HEAD OF TUB

THESE DIAGRAMS ILLUSTRATE THE SPECIFIC REQUIREMENTS OF THESE REGULATIONS AND ARE INTENDED ONLY AS AN AID FOR BUILDING DESIGN AND CONSTRUCTION.

FIGURE 11A-9E—CLEAR FLOOR SPACE AT BATHTUBS

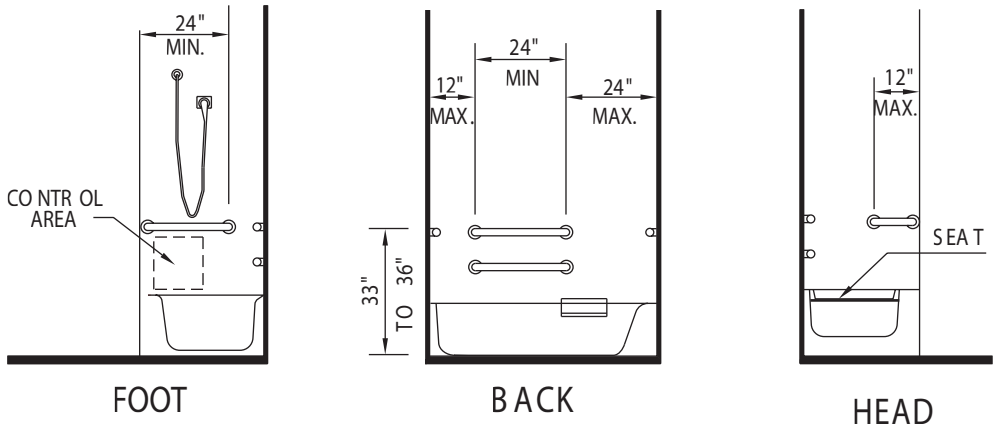

(a) WITH SEAT IN TUB

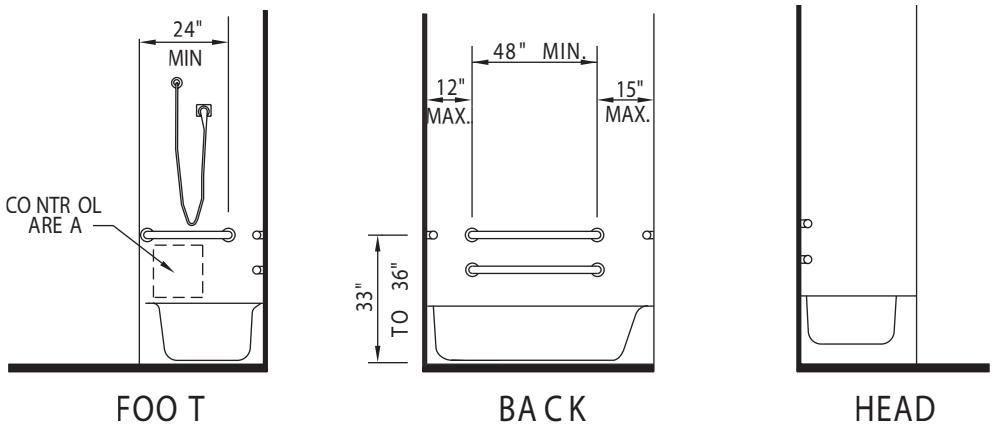

(b) WITH SEAT AT HEAD OF TUB

THESE DIAGRAMS ILLUSTRATE THE SPECIFIC REQUIREMENTS OF THESE REGULATIONS AND ARE INTENDED ONLY AS AN AID FOR BUILDING DESIGN AND CONSTRUCTION.

FIGURE 11A-9F—GRAB BARS AT BATHTUBS

(a) WATER CLOSET IN ADAPTABLE BATHROOMS

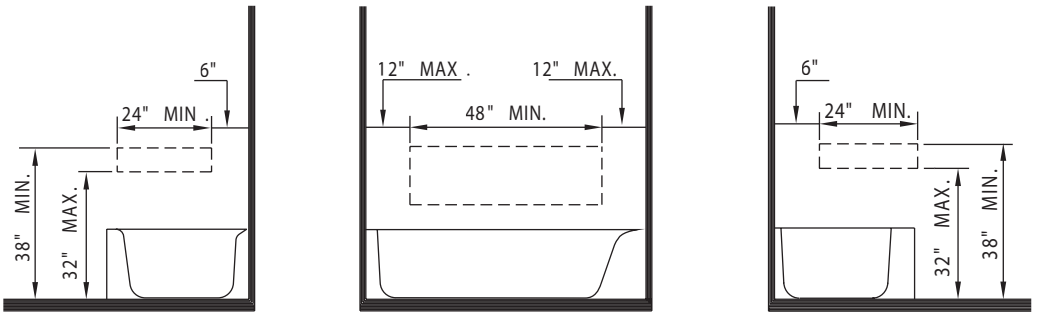

NOTE: THE AREA OUTLINED IN DASHED LINES REPRESENT LOCATIONS FOR FUTURE INSTALLATION OF GRAB BARS FOR TYP. FIXTURE CONFIGURATIONS

(b) LOCATION OF GRAB BAR REINFORCEMENTS FOR ADAPTABLE BATHTUBS

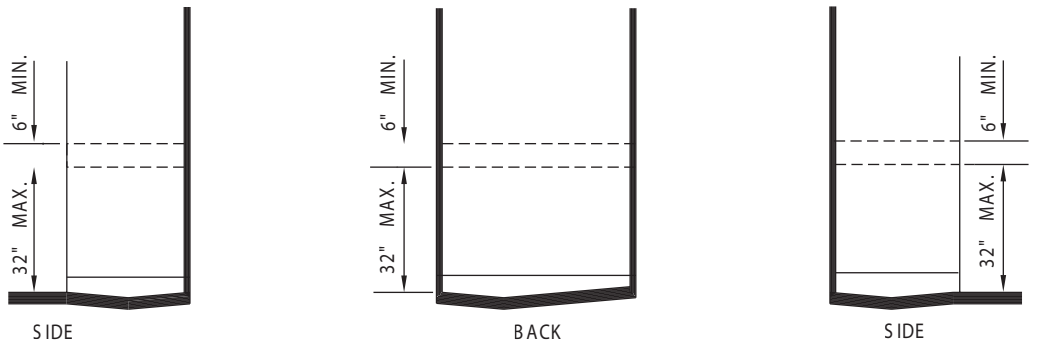

NOTE: THE AREA OUTLINED IN DASHED LINES REPRESENT LOCATION FOR FUTURE INSTALLATION OF GRAB BARS

(a) LOCATION OF GRAB BAR REINFORCEMENTS FOR ADAPTABLE SHOWERS

THESE DIAGRAMS ILLUSTRATE THE SPECIFIC REQUIREMENTS OF THESE REGULATIONS AND ARE INTENDED ONLY AS AN AID FOR BUILDING DESIGN AND CONSTRUCTION.

FIGURE 11A-9G

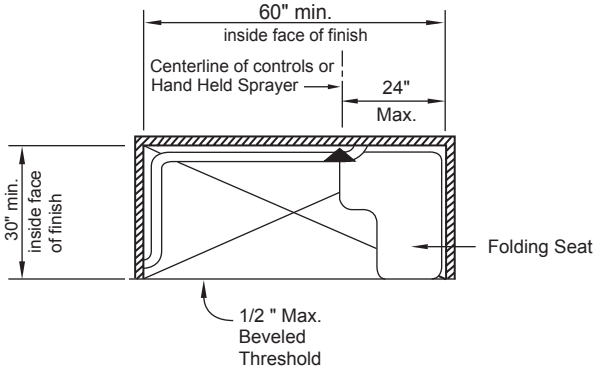

ROLL-IN SHOWER—A

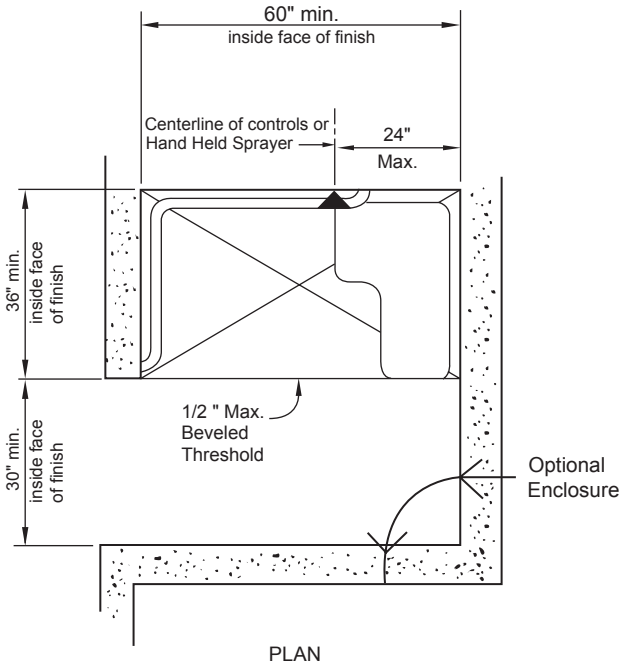

PLAN

ROLL-IN SHOWER—C
36" x 60" WITH ENCLOSURE

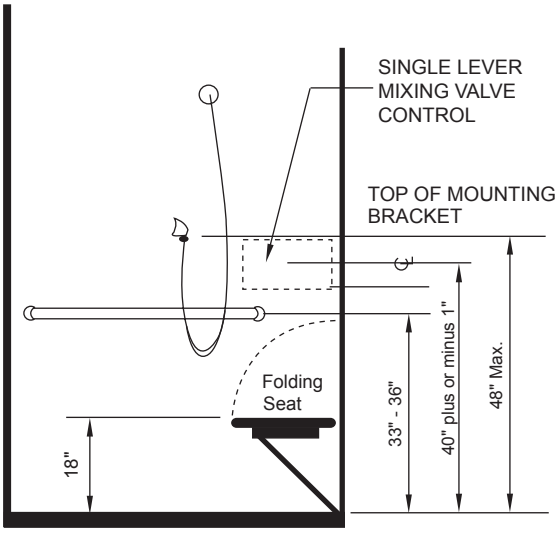

ELEVATION AT SHOWER
TYPICAL FOR A–C

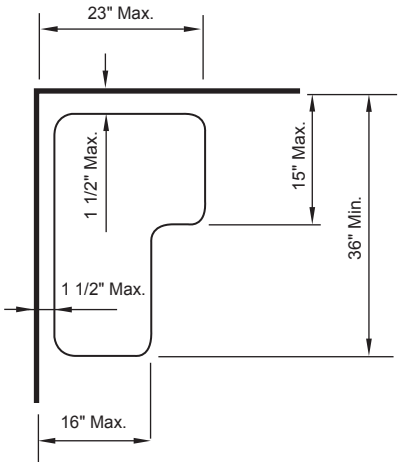

FOLDING SEAT

FIGURE 11A-9H—ROLL-IN SHOWER

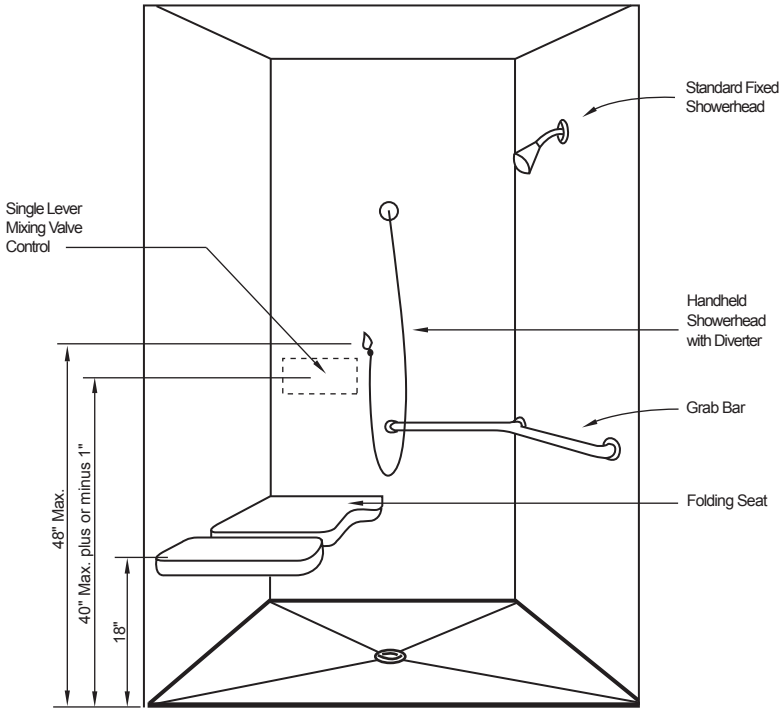

PERSPECTIVE OF ROLL-IN SHOWER—B
42" x 48" CALIFORNIA SIZE

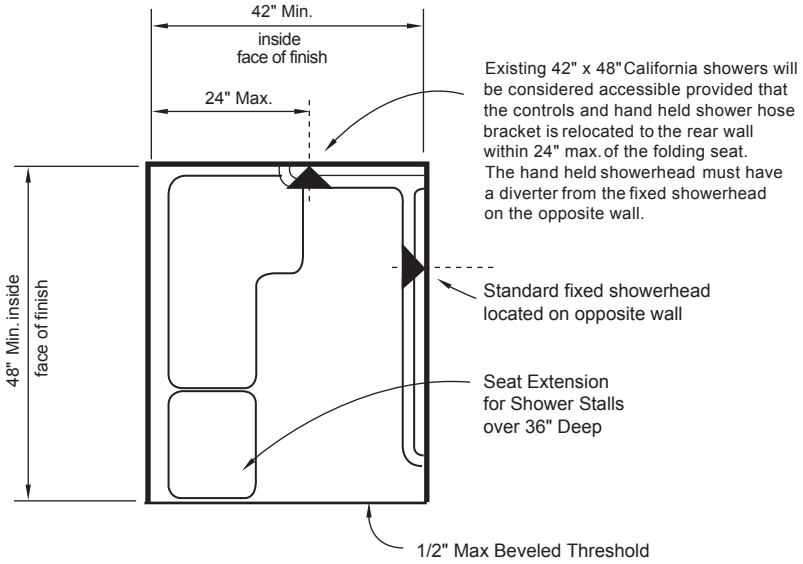

ROLL-IN SHOWER—B
42" x 48" CALIFORNIA SIZE

FIGURE 11A-9I —ROLL-IN SHOWER

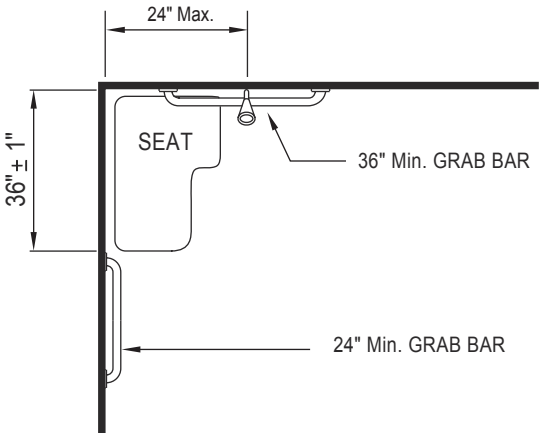

PLAN

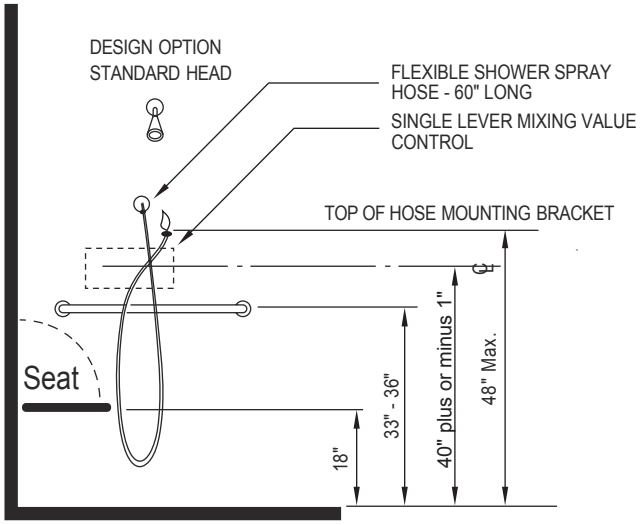

ELEVATION

THESE DIAGRAMS ILLUSTRATE THE SPECIFIC REQUIREMENTS OF THESE REGULATIONS AND ARE INTENDED ONLY AS AN AID FOR BUILDING DESIGN AND CONSTRUCTION

FIGURE 11A-9J—OPEN SHOWER

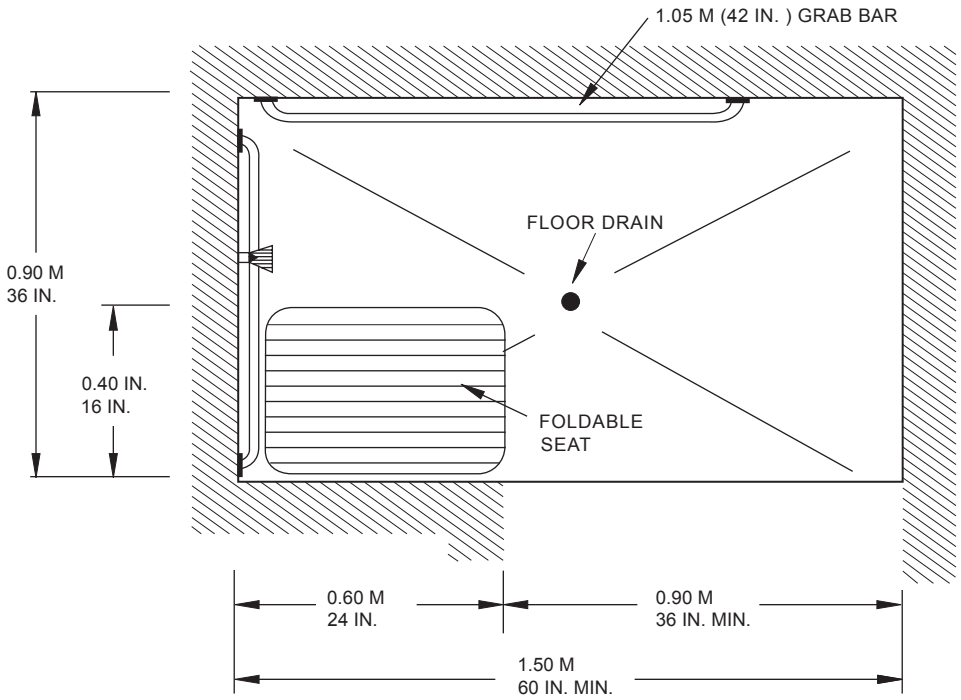

THIS DIAGRAM ILLUSTRATES THE SPECIFIC REQUIREMENTS OF THESE REGULATIONS AND IS INTENDED ONLY AS AN AID FOR BUILDING DESIGN AND CONSTRUCTION.

FIGURE 11A-9K—ALTERNATIVE ROLL-IN

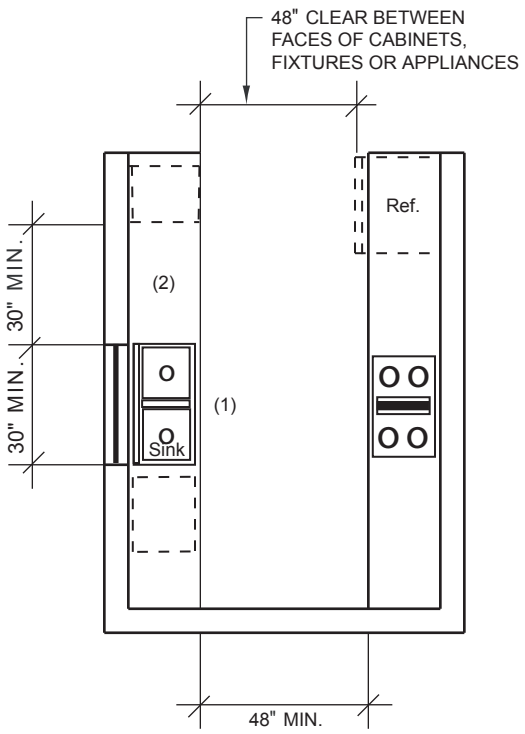

TYPICAL KITCHEN

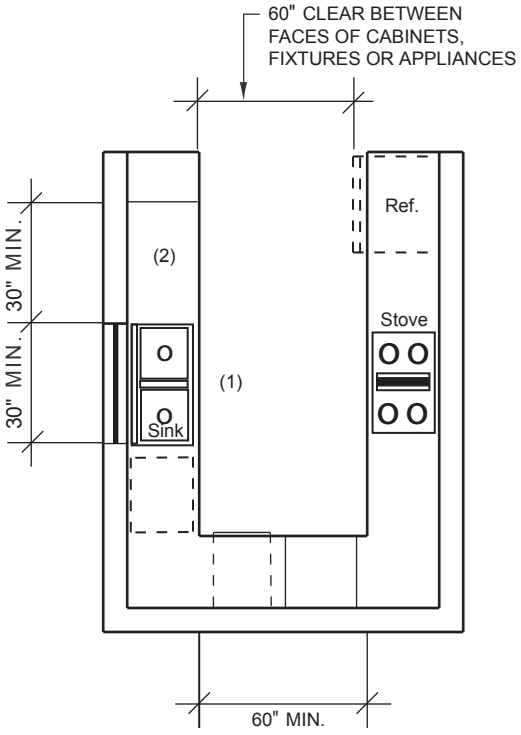

"U" SHAPED KITCHEN

(1) 30 inch wide counter top space for sink installation with removable base cabinet and finish flooring beneath sink
(2) 30 inch wide counter top workspace
(3) 30 inch by 48 inch clear space adjacent to range or cooktop to allow parallel approach
(4) 30 inch by 48 inch either parallel approach at oven, dishwasher, trash compactor or refrigerator

FIGURE 11A-10A—KITCHEN SPECIFICATIONS

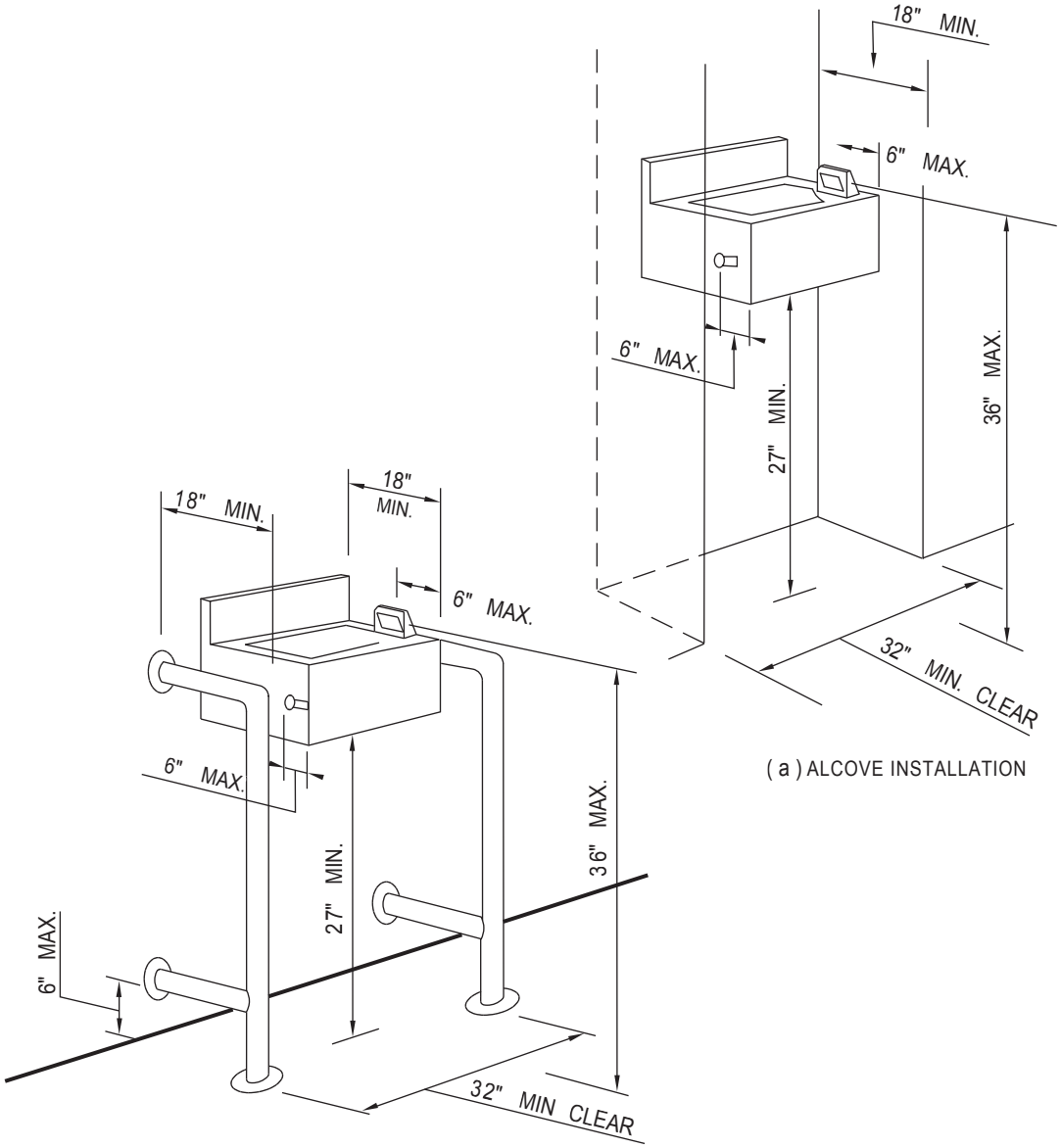

(a) ALCOVE INSTALLATION

(b) NONALCOVE WING WALL INSTALLATION

THESE DIAGRAMS ILLUSTRATE THE SPECIFIC REQUIREMENTS OF THESE REGULATIONS AND ARE INTENDED ONLY AS AN AID FOR BUILDING DESIGN AND CONSTRUCTION

FIGURE 11A-11A—WATER FOUNTAINS

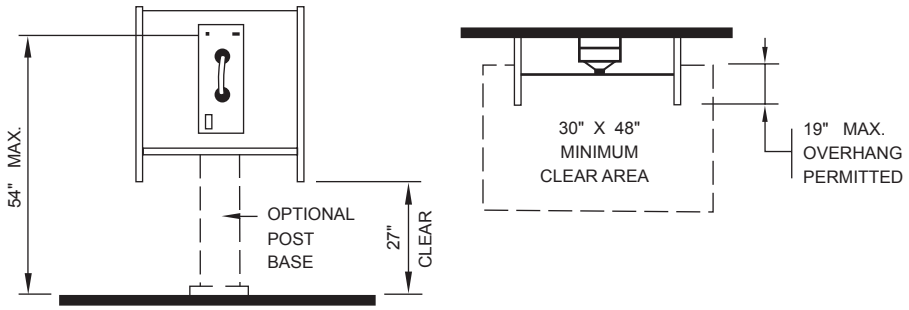

ELEVATION PLAN

(a) SIDE REACH ARRANGEMENT

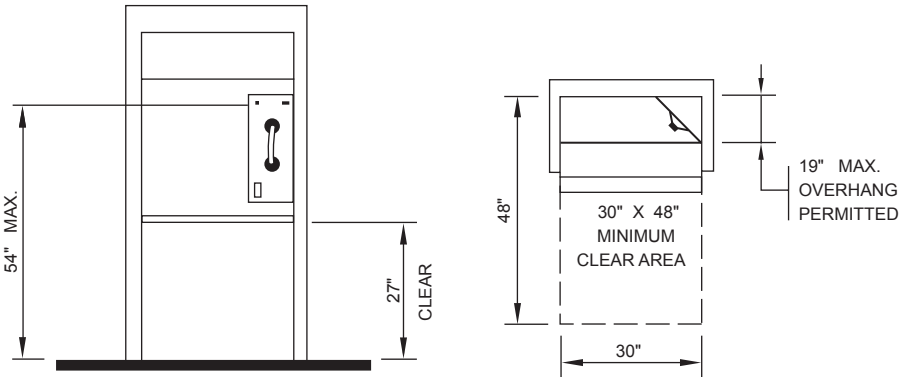

ELEVATION PLAN

(b) FULL HEIGHT ENCLOSURE

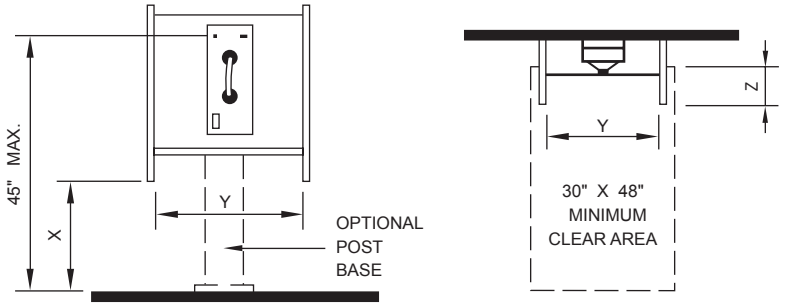

NOTE: IF Y IS LESS THAN 30 INCHES, THEN X SHALL BE GREATER THAN 27 INCHES.

NOTE: IF Z IS GREATER THAN 12 INCHES, THEN Y SHALL BE GREATER THAN 30 INCHES.

ELEVATION PLAN

(c) FORWARD REACH ARRANGEMENT

THESE DIAGRAMS ILLUSTRATE THE SPECIFIC REQUIREMENTS OF THESE REGULATIONS AND ARE INTENDED ONLY AS AN AID FOR BUILDING DESIGN AND CONSTRUCTION

FIGURE 11A-11B—MOUNTING HEIGHTS AND CLEARANCES FOR TELEPHONES

FIGURE 11A-11C— INTERNATIONAL TTY SYMBOL

FIGURE 11A-11D— VOLUME CONTROL TELEPHONES

FIGURE 11A-11E— INTERNATIONAL SYMBOL OF ACCESS FOR HEARING LOSS

THESE DIAGRAMS ILLUSTRATE THE SPECIFIC REQUIREMENTS OF THESE REGULATIONS AND ARE INTENDED ONLY AS AN AID FOR BUILDING DESIGN AND CONSTRUCTION.